**3-terminal filters, SMD array**
**Signal line**
**MEA-L series**

RoHS | REACH SVHC-Free | Halogen Free | Lead Free

# MEA2010L type

Product Portal | Search | Simulation Model | Tech Library | Tech Note

## FEATURES

- Single chip for 4-line LC filters, and compatible with high-density mounting.
- Compact with a low profile design.
- Operating temperature range: –40 to +85°C

## APPLICATION

- Noise removal from signal lines of smart phones, digital cameras, PCs, game machines, flat TVs, etc.
- Application guides: Smart phones/tablets

## PART NUMBER CONSTRUCTION

| MEA | 2010 | L | 50R0 | T | 001 |
|---|---|---|---|---|---|
| Series name | L×W×T dimensions 2.0×1.0×0.7 mm | Product internal code | Cutoff frequency typ. (MHz) | Packaging style | Internal code |

## CHARACTERISTICS SPECIFICATION TABLE

| Cutoff frequency (MHz)typ. | Insertion loss 20dB frequency range (MHz) | Rated voltage (V)max. | Rated current (mA)max. | Part No. |
|---|---|---|---|---|
| 50 | 500 to 2000 | 10 | 100 | MEA2010L50R0T001 |
| 75 | 600 to 2000 | 10 | 100 | MEA2010L75R0T001 |
| 100 | 800 to 2000 | 10 | 100 | MEA2010L101RT001 |

Measurement equipment

| Measurement item | Product No. | Manufacturer |
|---|---|---|
| Frequency characteristics | N5230C | Keysight Technologies |

* Equivalent measurement equipment may be used.

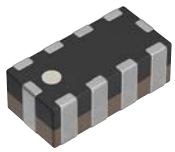

⚠ Please be sure to request delivery specifications that provide further details on the features and specifications of the products for proper and safe use.
Please note that the contents may change without any prior notice due to reasons such as upgrading.

# MEA2010L type

## INSERTION LOSS VS. FREQUENCY CHARACTERISTICS

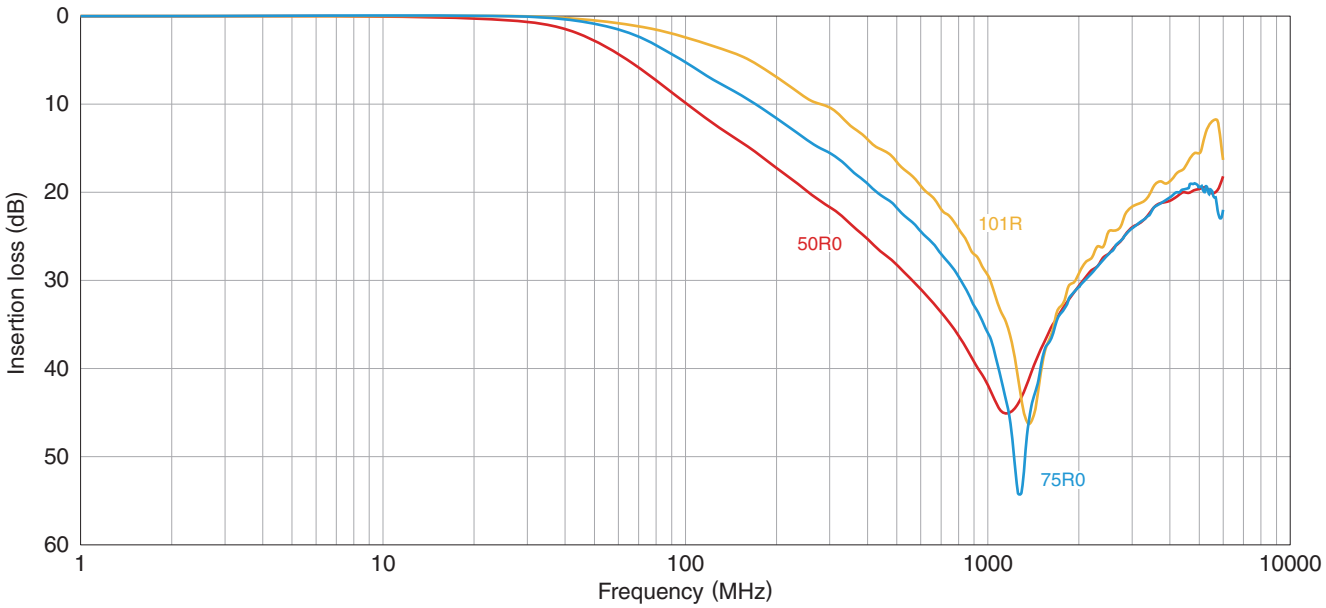


Measurement equipment

| Product No. | Manufacturer |
|---|---|
| N5230C | Keysight Technologies |

* Equivalent measurement equipment may be used.

# MEA2010L type

## SHAPE & DIMENSIONS

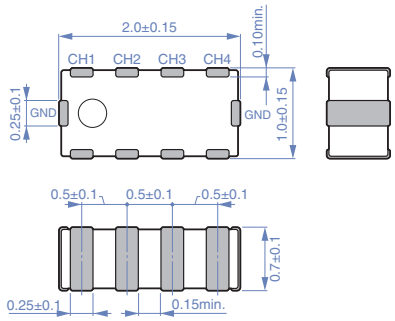


Dimensions in mm

## RECOMMENDED LAND PATTERN

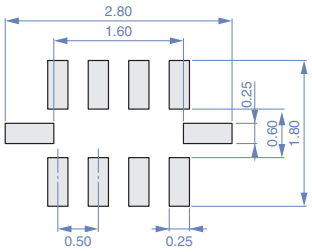


Dimensions in mm

## CIRCUIT DIAGRAM

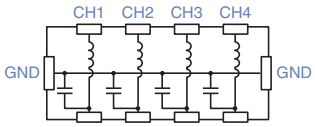


## RECOMMENDED REFLOW PROFILE

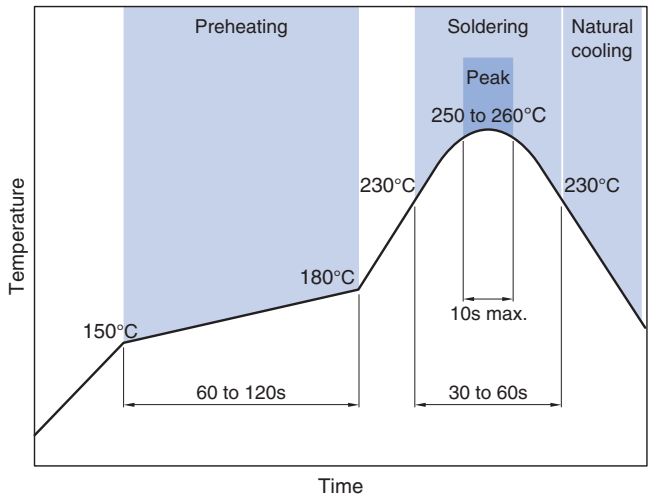


## PACKAGING STYLE

### REEL DIMENSIONS

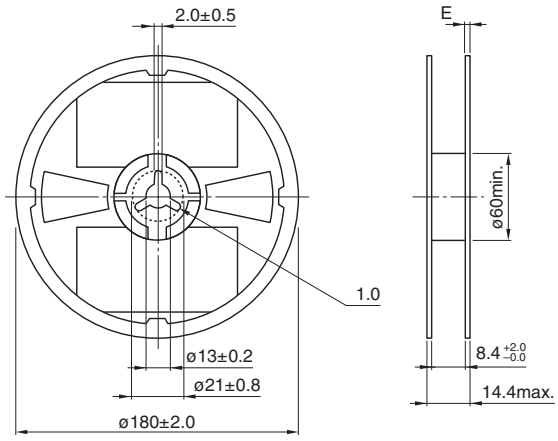


Dimensions in mm

### TAPE DIMENSIONS

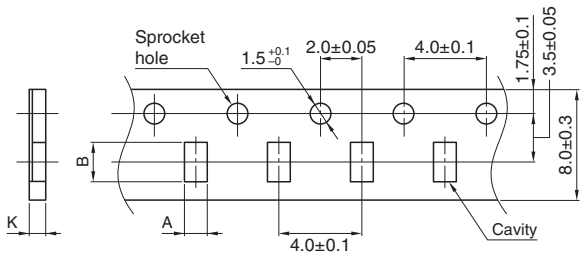


Dimensions in mm

| Type | A | B | K |
|---|---|---|---|
| MEA2010L | 1.15±0.05 | 2.15±0.05 | 0.86max. |

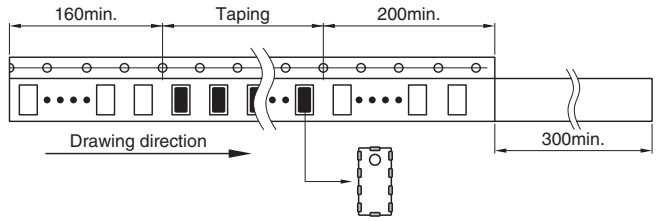


Dimensions in mm

### PACKAGE QUANTITY

| Package quantity | 4,000 pcs/reel |
|---|---|

## TEMPERATURE RANGE, INDIVIDUAL WEIGHT

| Operating temperature range | Storage temperature range* | Individual weight |
|---|---|---|
| –40 to +85 °C | –40 to +85 °C | 7 mg |

* The storage temperature range is for after the assembly.

⚠ Please be sure to request delivery specifications that provide further details on the features and specifications of the products for proper and safe use.
Please note that the contents may change without any prior notice due to reasons such as upgrading.

# REMINDERS FOR USING THESE PRODUCTS

Before using these products, be sure to request the delivery specifications.

# SAFETY REMINDERS

Please pay sufficient attention to the warnings for safe designing when using this products.

## ⚠ REMINDERS

- The storage period is less than 12 months. Be sure to follow the storage conditions (temperature: 5 to 40°C, humidity: 10 to 75% RH or less).
  If the storage period elapses, the soldering of the terminal electrodes may deteriorate.
- Do not use or store in locations where there are conditions such as gas corrosion (salt, acid, alkali, etc.).
- Before soldering, be sure to preheat components.
  The preheating temperature should be set so that the temperature difference between the solder temperature and chip temperature does not exceed 150°C.
- Soldering corrections after mounting should be within the range of the conditions determined in the specifications.
  If overheated, a short circuit, performance deterioration, or lifespan shortening may occur.
- When embedding a printed circuit board where a chip is mounted to a set, be sure that residual stress is not given to the chip due to the overall distortion of the printed circuit board and partial distortion such as at screw tightening portions.
- Self heating (temperature increase) occurs when the power is turned ON, so the tolerance should be sufficient for the set thermal design.
- Carefully lay out the coil for the circuit board design of the non-magnetic shield type.
  A malfunction may occur due to magnetic interference.
- Use a wrist band to discharge static electricity in your body through the grounding wire.
- Do not expose the products to magnets or magnetic fields.
- Do not use for a purpose outside of the contents regulated in the delivery specifications.
- The products listed on this catalog are intended for use in general electronic equipment (AV equipment, telecommunications equipment, home appliances, amusement equipment, computer equipment, personal equipment, office equipment, measurement equipment, industrial robots) under a normal operation and use condition.
  The products are not designed or warranted to meet the requirements of the applications listed below, whose performance and/or quality require a more stringent level of safety or reliability, or whose failure, malfunction or trouble could cause serious damage to society, person or property.
  If you intend to use the products in the applications listed below or if you have special requirements exceeding the range or conditions set forth in the each catalog, please contact us.

(1) Aerospace/aviation equipment
(2) Transportation equipment (cars, electric trains, ships, etc.)
(3) Medical equipment
(4) Power-generation control equipment
(5) Atomic energy-related equipment
(6) Seabed equipment
(7) Transportation control equipment
(8) Public information-processing equipment
(9) Military equipment
(10) Electric heating apparatus, burning equipment
(11) Disaster prevention/crime prevention equipment
(12) Safety equipment
(13) Other applications that are not considered general-purpose applications

When designing your equipment even for general-purpose applications, you are kindly requested to take into consideration securing protection circuit/device or providing backup circuits in your equipment.