3-terminal filters, SMD array
Differential signal line (cellular band compatible)
MEA-LD series

RoHS REACH SVHC-Free Halogen Free Lead Free

MEA2010LD type

Product Portal Search Simulation Model Tech Library Tech Note

FEATURES

- LC filter with differential lines (D+ and D–) for high-density mounting.
- Compact with a low profile design.
- Can reduce radiation noise generated from differential signal lines (LVDS, MIPI, MDDI).
- Effective as a desensitization countermeasure in information transmission terminals such as smart phones.
- Operating temperature range: −40 to +85°C

APPLICATION

- Noise removal for differential transmission lines (MIPI, etc.) of various mobile devices.
- Application guides: Smart phones/tablets

PART NUMBER CONSTRUCTION

MEA	2010	LD	220	T	002
Series name	L×W×T dimensions 2.0×1.0×0.5 mm	Product internal code	Capacitance (pF)	Packaging style	Internal code

CHARACTERISTICS SPECIFICATION TABLE

Capacitance (pF)	Cutoff frequency (MHz)typ.	Rated voltage (V)max.	Rated current (mA)max.	Part No.
22	240(Sdd)	6.3	100	MEA2010LD220T002
17	330(Sdd)	6.3	100	MEA2010LD170T002
12	430(Sdd)	6.3	100	MEA2010LD120T002

Measurement equipment

Measurement item	Product No.	Manufacturer
Capacitance	4294A	Keysight Technologies
Frequency characteristics	N5230C	Keysight Technologies

＊ Equivalent measurement equipment may be used.

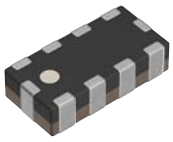

MEA2010LD type

INSERTION LOSS VS. FREQUENCY CHARACTERISTICS

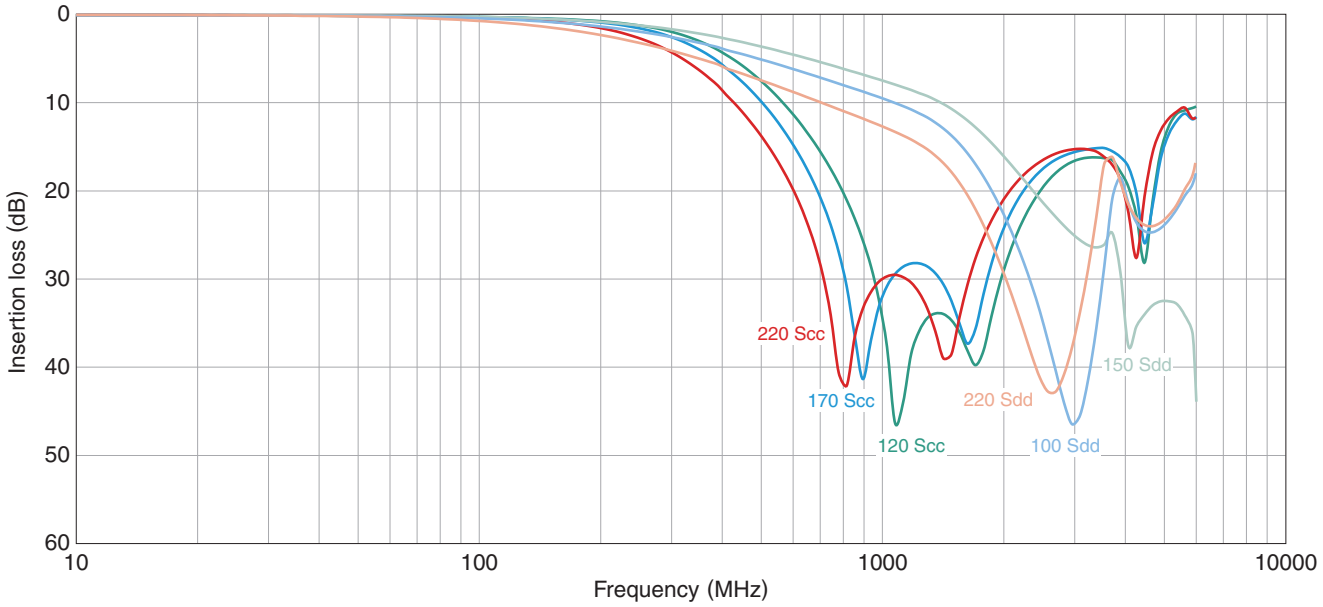

Measurement equipment

Product No.	Manufacturer
N5230C	Keysight Technologies

* Equivalent measurement equipment may be used.

MEA2010LD type

SHAPE & DIMENSIONS

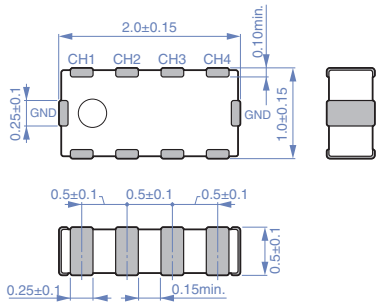

Dimensions in mm

RECOMMENDED LAND PATTERN

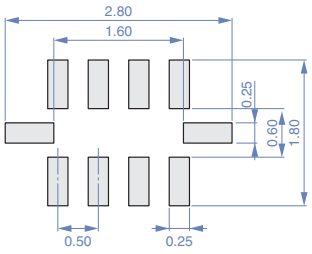

Dimensions in mm

CIRCUIT DIAGRAM

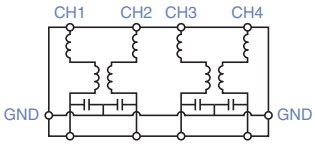

RECOMMENDED REFLOW PROFILE

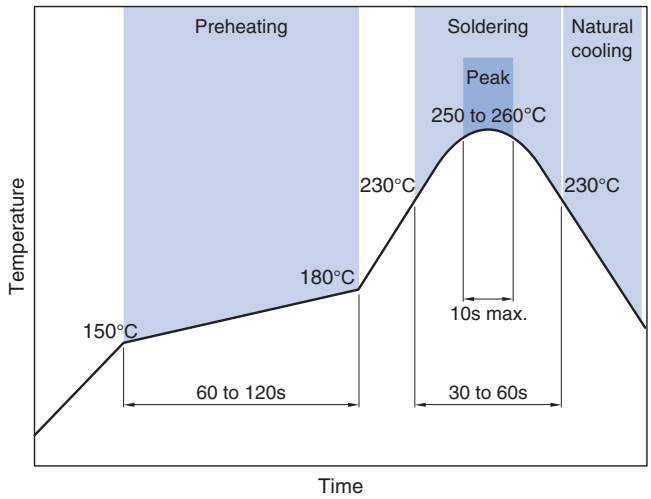

PACKAGING STYLE

REEL DIMENSIONS

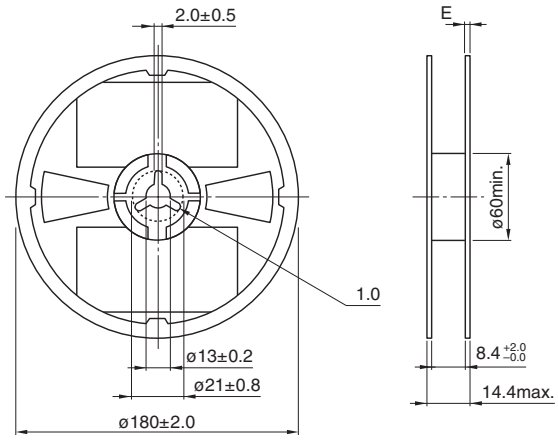

Dimensions in mm

TAPE DIMENSIONS

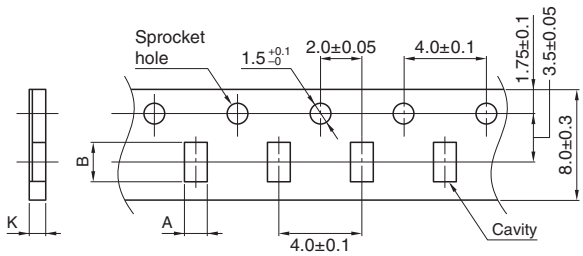

Dimensions in mm

Type	A	B	K
MEA2010LD	1.15±0.05	2.15±0.05	1.0max.

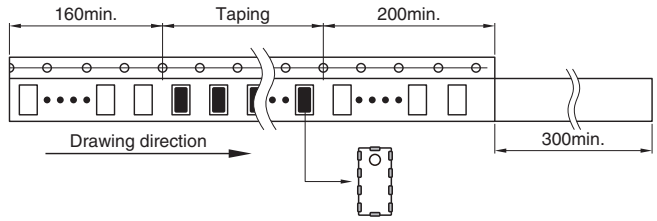

Dimensions in mm

PACKAGE QUANTITY

Package quantity	4,000 pcs/reel

TEMPERATURE RANGE, INDIVIDUAL WEIGHT

Operating temperature range	Storage temperature range*	Individual weight
–40 to +85 °C	–40 to +85 °C	5 mg

* The storage temperature range is for after the assembly.

⚠ Please be sure to request delivery specifications that provide further details on the features and specifications of the products for proper and safe use.
Please note that the contents may change without any prior notice due to reasons such as upgrading.

REMINDERS FOR USING THESE PRODUCTS

Before using these products, be sure to request the delivery specifications.

SAFETY REMINDERS

Please pay sufficient attention to the warnings for safe designing when using this products.

⚠ REMINDERS

- The storage period is less than 12 months. Be sure to follow the storage conditions (temperature: 5 to 40°C, humidity: 10 to 75% RH or less).
  If the storage period elapses, the soldering of the terminal electrodes may deteriorate.
- Do not use or store in locations where there are conditions such as gas corrosion (salt, acid, alkali, etc.).
- Before soldering, be sure to preheat components.
  The preheating temperature should be set so that the temperature difference between the solder temperature and chip temperature does not exceed 150°C.
- Soldering corrections after mounting should be within the range of the conditions determined in the specifications.
  If overheated, a short circuit, performance deterioration, or lifespan shortening may occur.
- When embedding a printed circuit board where a chip is mounted to a set, be sure that residual stress is not given to the chip due to the overall distortion of the printed circuit board and partial distortion such as at screw tightening portions.
- Self heating (temperature increase) occurs when the power is turned ON, so the tolerance should be sufficient for the set thermal design.
- Carefully lay out the coil for the circuit board design of the non-magnetic shield type.
  A malfunction may occur due to magnetic interference.
- Use a wrist band to discharge static electricity in your body through the grounding wire.
- Do not expose the products to magnets or magnetic fields.
- Do not use for a purpose outside of the contents regulated in the delivery specifications.
- The products listed on this catalog are intended for use in general electronic equipment (AV equipment, telecommunications equipment, home appliances, amusement equipment, computer equipment, personal equipment, office equipment, measurement equipment, industrial robots) under a normal operation and use condition.
  The products are not designed or warranted to meet the requirements of the applications listed below, whose performance and/or quality require a more stringent level of safety or reliability, or whose failure, malfunction or trouble could cause serious damage to society, person or property.
  If you intend to use the products in the applications listed below or if you have special requirements exceeding the range or conditions set forth in the each catalog, please contact us.

(1) Aerospace/aviation equipment
(2) Transportation equipment (cars, electric trains, ships, etc.)
(3) Medical equipment
(4) Power-generation control equipment
(5) Atomic energy-related equipment
(6) Seabed equipment
(7) Transportation control equipment
(8) Public information-processing equipment
(9) Military equipment
(10) Electric heating apparatus, burning equipment
(11) Disaster prevention/crime prevention equipment
(12) Safety equipment
(13) Other applications that are not considered general-purpose applications

When designing your equipment even for general-purpose applications, you are kindly requested to take into consideration securing protection circuit/device or providing backup circuits in your equipment.