TDK

3-terminal Filters(SMD)
For Signal Line

Conformity to RoHS Directive

MEM Series MEM2012T Type

FEATURES

- Multilayer chip EMC filter utilizing a T-type circuit.
- Entirely monolithic structure results in high reliability.
- Due to closed magnetic circuit architecture, high-density installation becomes possible, and crosstalk generation is prevented.
- Steep attenuation characteristic plot. Highly effective noise suppression.
- Covers a wide range of frequencies.
- MEM2012T is a coil type EMC filter.

APPLICATIONS

Computer and computer peripherals, VCRs, TVs, car audio equipment, printers, game machines, etc.

PRODUCT IDENTIFICATION

MEM	2012	T	10R0	T
(1)	(2)	(3)	(4)	(5)

(1)Series name
(2)Dimensions L×W
(3)T-type circuit
(4)Cutoff freguency 10R0:10MHz
(5)Packaging style T:Taping

PACKAGING STYLE AND QUANTITIES

Packaging style	Quantity
Taping	1000 pieces/reel

TEMPERATURE RANGES

Operating/Storage	–40 to +85°C

SHAPES AND DIMENSIONS/RECOMMENDED PC BOARD PATTERN

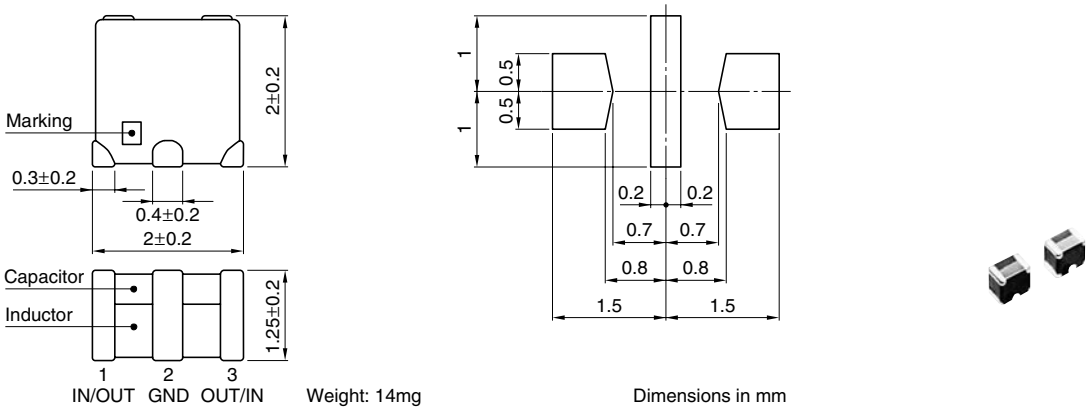

Weight: 14mg

Dimensions in mm

ELECTRICAL CHARACTERISTICS

Part No.	Cutoff frequency (MHz)	Insertion loss (dB)min.	Rated voltage Edc(V)max.	Rated current (mA)max.
MEM2012T10R0	10	20[40 to 900MHz]	10	100
MEM2012T25R0	25	20[80MHz to 1GHz]	10	150
MEM2012T50R0	50	20[150MHz to 1.2GHz]	10	150
MEM2012T75R0	75	20[300MHz to 1.7GHz]	10	250
MEM2012T101R	100	20[400MHz to 1.7GHz]	10	250

- Conformity to RoHS Directive: This means that, in conformity with EU Directive 2002/95/EC, lead, cadmium, mercury, hexavalent chromium, and specific bromine-based flame retardants, PBB and PBDE, have not been used, except for exempted applications.
- Please contact our Sales office when your application are considered the following:
  The device's failure or malfunction may directly endanger human life (e.g. application for automobile/aircraft/medical/nuclear power devices, etc.)

• All specifications are subject to change without notice.

TYPICAL ELECTRICAL CHARACTERISTICS

ATTENUATION vs. FREQUENCY CHARACTERISTICS

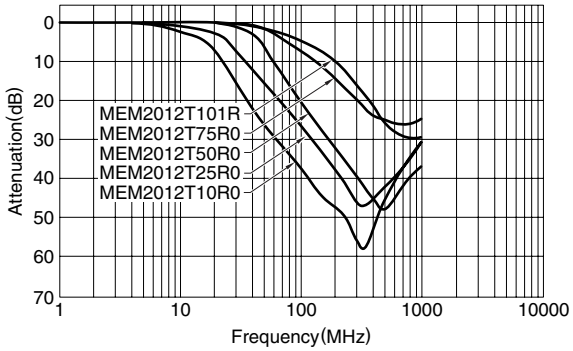

MEASURING CIRCUIT

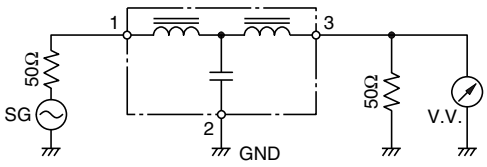

RECOMMENDED SOLDERING CONDITION

REFLOW SOLDERING

