Common Mode Filters

For general signal line/power line

ZJY series

Type: **ZJY51R5**

Issue date: September 2011

- All specifications are subject to change without notice.
- Conformity to RoHS Directive: This means that, in conformity with EU Directive 2002/95/EC, lead, cadmium, mercury, hexavalent chromium, and specific bromine-based flame retardants, PBB and PBDE, have not been used, except for exempted applications.

Common Mode Filters
For General Signal Line / Power Line

Conformity to RoHS Directive

ZJY Series ZJY51R5

FEATURES

- A common mode filter for distortion-free removal of noise from transmitted signals. Best common mode filter for transmission of high quality signals.
- Best filter for countering the common mode noise resulting from data signal processing by PCs, phone equipment, etc.
- Highly appropriate for IC board mounting due to DIP type structure.
- Due to a maximum current tolerance of 2A, can also be used to counter power line noise.

APPLICATIONS

Personal computers, telephones, LANs, ISDNs, digital PBXs, electronic games, CTVs, CD-ROM drives, 8mm video equipment, and other electronic devices

RECOMMENDED SOLDERING CONDITION
RECOMMENDED FLOW TEMPERATURE PROFILE FOR LEAD-FREE SOLDER

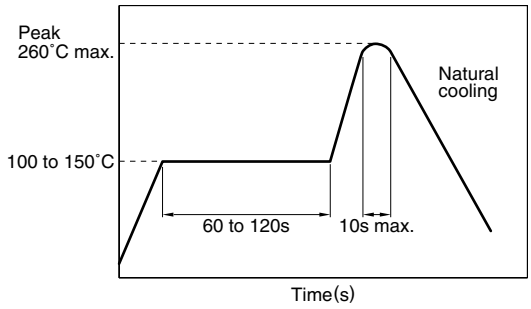

PACKAGING STYLE AND QUANTITIES(Tube style)

Part No.	Quantity
ZJY51R5-2P-01	80 pieces
ZJY51R5-2PB-01	80 pieces
ZJY51R5-2PL-01	80 pieces
ZJY51R5-4P-01	40 pieces
ZJY51R5-M4PA-01	40 pieces
ZJY51R5-8PA-01	20 pieces

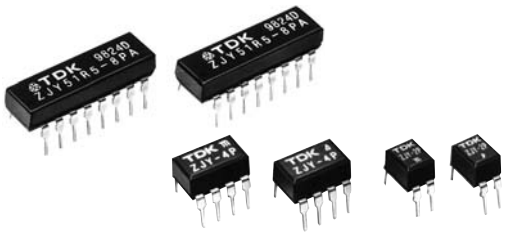

SHAPES AND DIMENSIONS

TRANSFER MOLD
ZJY51R5-2P-01, -2PB-01, -2PL-01

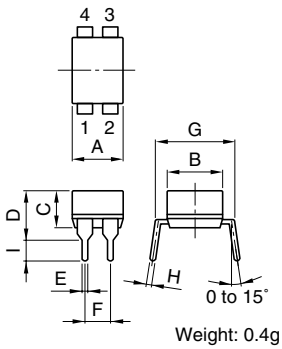

Weight: 0.4g

ZJY51R5-4P-01, -M4PA-01

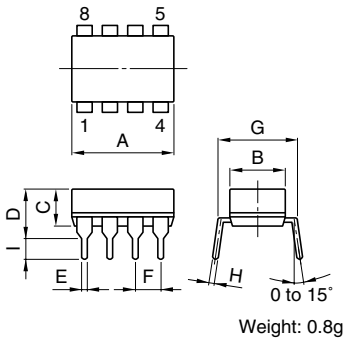

Weight: 0.8g

PLASTIC CASE
ZJY51R5-8PA-01

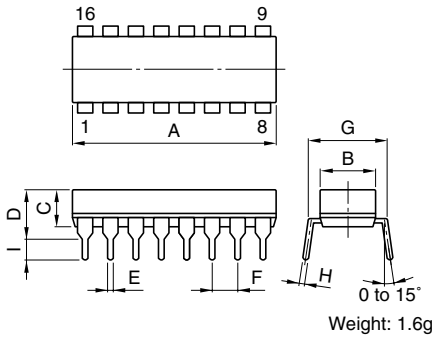

Weight: 1.6g

Dimensions in mm

Part No.	A max.	B max.	C max.	D max.	E	F±0.25	G	H	I
ZJY51R5-2P-01, -2PB-01, -2PL-01*	5.5	6.86	4.57	5.84	0.5	2.54	7.62	0.25	2.54
ZJY51R5-4P-01, -M4PA-01	10.5	6.86	4.57	5.84	0.5	2.54	7.62	0.25	2.54
ZJY51R5-8PA-01	23.5	7	4.6	6.3	0.5	2.54	7.62	0.25	2.54

* The "-01" designation at the end of the product code indicates Lead-free compatible product.

CIRCUIT DIAGRAMS

ZJY51R5-2P-01, -2PB-01, -2PL-01

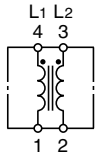

ZJY51R5-4P-01, -M4PA-01

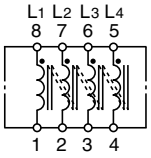

ZJY51R5-8PA-01

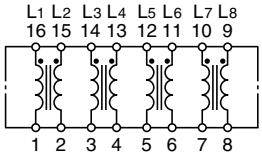

- Conformity to RoHS Directive: This means that, in conformity with EU Directive 2002/95/EC, lead, cadmium, mercury, hexavalent chromium, and specific bromine-based flame retardants, PBB and PBDE, have not been used, except for exempted applications.

• All specifications are subject to change without notice.

ELECTRICAL CHARACTERISTICS

Part No.	ZJY51R5-2P-01, -4P-01	ZJY51R5-2PB-01*1	ZJY51R5-2PL-01*2	ZJY51R5-M4PA-01	ZJY51R5-8PA-01
Rated voltage Edc(V)	50	50	50	50	50
Rated current (A)	2	2	2	0.5	0.5
Test voltage Edc(V) [Between terminals for 5s]	125	125	250	125	250
Insulation resistance (MΩ) [Between terminals at DC.50V for 1min]	100 min.	100 min.	100 min.	100 min.	100 min.
DC resistance (Ω) [Each line]	0.12 max.	0.12 max.	0.10 max.	0.25 max.	0.07 max.
Operating temperature range (°C)	–25 to +85	–25 to +85	–25 to +85	–25 to +85	–25 to +85
Storage temperature range(After mount)(°C)	–25 to +85	–25 to +85	–25 to +85	–25 to +85	–25 to +85
Impedance (Ω) [+5 to +35°C]	200 min. [20 to 300MHz]	300 min. [6 to 20MHz]	100 min. [20 to 100MHz]	200 min. [20 to 300MHz]	200 min. [20 to 300MHz]

*1 This type has improved low-range characteristics.
*2 This type is wrapped separately (for communication lines).

TYPICAL ELECTRICAL CHARACTERISTICS

IMPEDANCE CHARACTERISTICS (for 1 element)

ZJY51R5-2P-01, -4P-01, -8PA-01

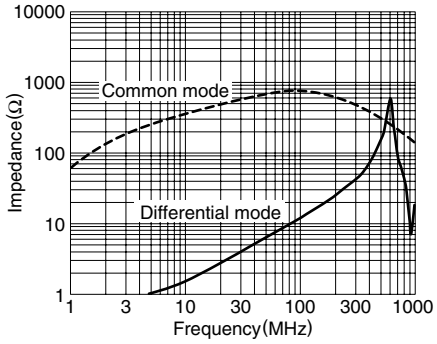

ZJY51R5-2PB-01

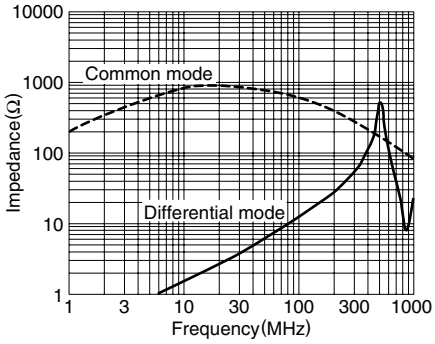

ZJY51R5-2PL-01

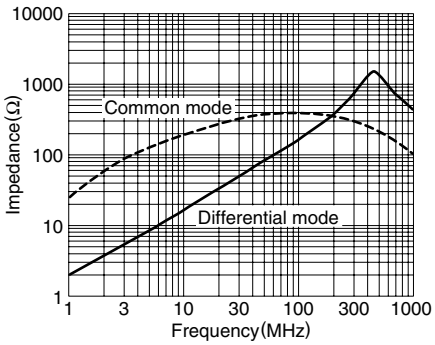

ZJY51R5-M4PA-01

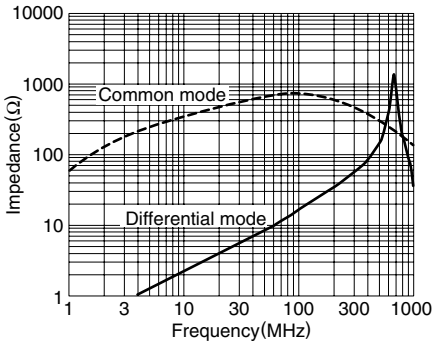

MEASURING CIRCUIT

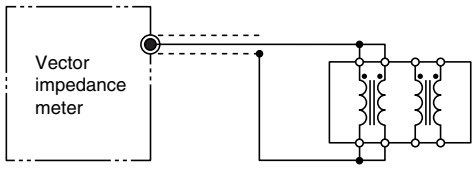

Vector impedance meter(YHP 4191A equivalent)
Measuring at each Common mode choke coil

TYPICAL APPLICATION

An application example showing how radiation noise is prevented when transmitter and receiver are connected via twisted pair cables.

