Features

- The power density improves to 111%-153% compared with predecessors, and the miniaturization is achieved.
- Nonuse of tantalum capacitor or aluminum electrolytic capacitor.
- Nonuse of photo-coupler.
- 5-side metal-shielded low noise design.
- The high withstand voltage product (without case)corresponds（Between input terminal and output terminal : 1500Vdc）
- Supports DIP insertion and SMD mounting.
- Remote On/Off function incorporated in all series of products.
- Simultaneous start function incorporated in all series of products.
- Parallel operation is possible.
- Alarm function incorporated in all series of products.
- Over current, over voltage and low voltage protection functions incorporated in all series of products
- Safety agency approvals UL60950-1, CSA C22.2 No.60950-1(C-UL) and EN60950-1(NEMKO) are scheduled to be acquired.

Model-naming method

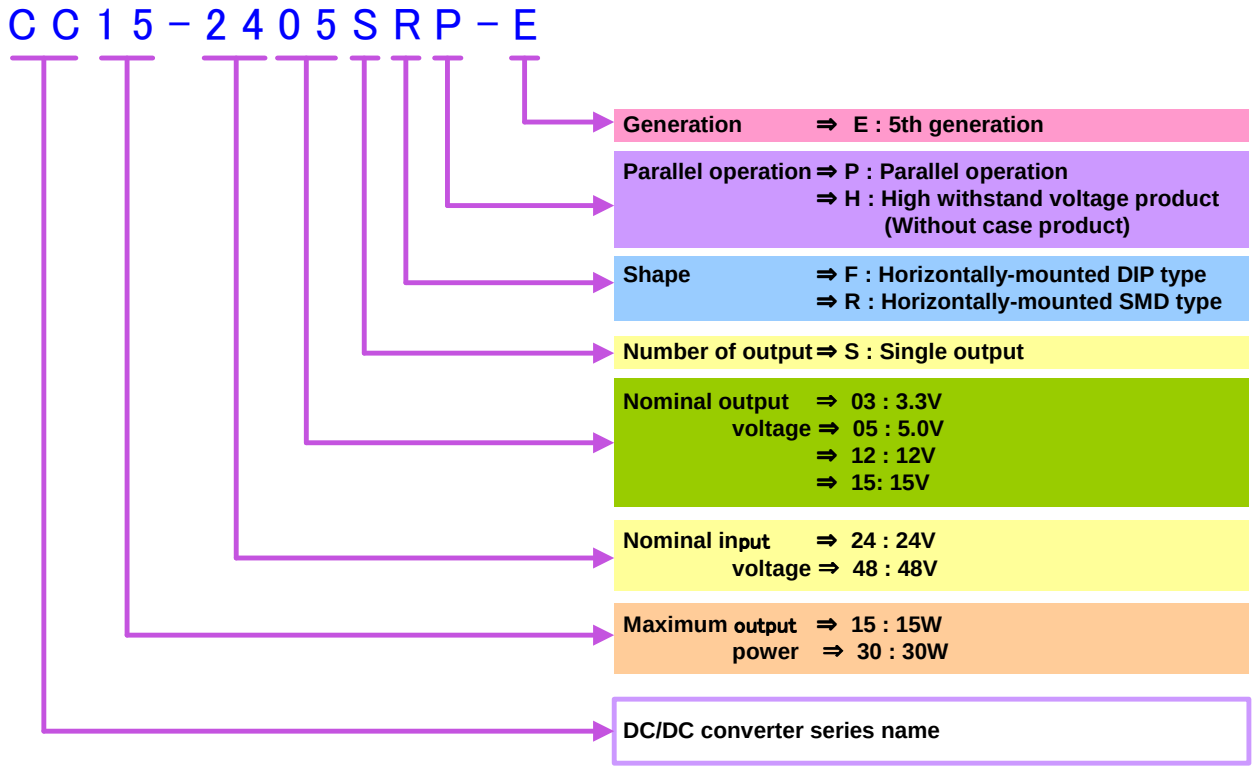

Product line up

Outpit Power	Input Voltage	Model name (Output voltage = 3.3V)				
		Output Current	With metal-case DIP type	With metal-case SMD type	High withstand voltage (Wihtout case) DIP type	High withstand voltage (Wihtout case) SMD type
15W	24V	4.5A	CC15-2403SFP-E	CC15-2403SRP-E	CC15-2403SFH-E	CC15-2403SRH-E
	48V	4.5A	CC15-4803SFP-E	CC15-4803SRP-E	CC15-4803SFH-E	CC15-4803SRH-E
30W	24V	9A	CC30-2403SFP-E	CC30-2403SRP-E	CC30-2403SFH-E	CC15-3003SRH-E
	48V	9A	CC30-4803SFP-E	CC30-4803SRP-E	CC30-4803SFH-E	CC30-4803SRH-E

Outpit Power	Input Voltage	Model name (Output voltage = 5.0V)				
		Output Current	With metal-case DIP type	With metal-case SMD type	High withstand voltage (Wihtout case) DIP type	High withstand voltage (Wihtout case) SMD type
15W	24V	3A	CC15-2405SFP-E	CC15-2405SRP-E	CC15-2405SFH-E	CC15-2405SRH-E
	48V	3A	CC15-4805SFP-E	CC15-4805SRP-E	CC15-4805SFH-E	CC15-4805SRH-E
30W	24V	6A	CC30-2405SFP-E	CC30-2405SRP-E	CC30-2405SFH-E	CC15-3005SRH-E
	48V	6A	CC30-4805SFP-E	CC30-4805SRP-E	CC30-4805SFH-E	CC30-4805SRH-E

Outpit Power	Input Voltage	Model name (Output voltage = 12V)				
		Output Current	With metal-case DIP type	With metal-case SMD type	High withstand voltage (Wihtout case) DIP type	High withstand voltage (Wihtout case) SMD type
15W	24V	1.25A	CC15-2412SFP-E	CC15-2412SRP-E	CC15-2412SFH-E	CC15-2412SRH-E
	48V	1.25A	CC15-4812SFP-E	CC15-4812SRP-E	CC15-4812SFH-E	CC15-4812SRH-E
30W	24V	2.5A	CC30-2412SFP-E	CC30-2412SRP-E	CC30-2412SFH-E	CC15-3012SRH-E
	48V	2.5A	CC30-4812SFP-E	CC30-4812SRP-E	CC30-4812SFH-E	CC30-4812SRH-E

Outpit Power	Input Voltage	Model name (Output voltage = 15V)				
		Output Current	With metal-case DIP type	With metal-case SMD type	High withstand voltage (Wihtout case) DIP type	High withstand voltage (Wihtout case) SMD type
15W	24V	1.00A	CC15-2415SFP-E	CC15-2415SRP-E	CC15-2415SFH-E	CC15-2415SRH-E
	48V	1.00A	CC15-4815SFP-E	CC15-4815SRP-E	CC15-4815SFH-E	CC15-4815SRH-E
30W	24V	2.0A	CC30-2415SFP-E	CC30-2415SRP-E	CC30-2415SFH-E	CC15-3015SRH-E
	48V	2.0A	CC30-4815SFP-E	CC30-4815SRP-E	CC30-4815SFH-E	CC30-4815SRH-E

Specifications

CC15-24xxSxx-E Specifications

Items/Units \ Model			CC15-2403Sxx-E	CC15-2405Sxx-E	CC15-2412Sxx-E	CC15-2415Sxx-E
Input	Nominal Voltage	V	DC24.0			
	Voletage Range	V	DC18 - 36			
	Efficiency typ (*1)	%	89.0	90.0	89.0	89.0
	Current typ (*1)	A	0.7	0.69	0.7	0.7
	Start-Up Voletage	V	DC16 - 18			
	Hysteresis Voletage	V	DC1 min			
Output	Nominal Voltage	V	3.3	5	12	15
	Maximum Current	A	4.5	3	1.25	1
	Voltage Accuracy max	%	+5%, -3%			
	Ripple & Noise max (*2)	mVp-p	50mV		150mV	
	Start-Up Time	mS	20 - 100			
	Outpit Voltage Setting (*1)	%	±1% of nominal output voltage			
Function	Over Current Protection		Works over 103% of rating			
	Over Voltage Protection		Works at 115 - 145% of rating			
	Low Voltege Protection		Works at 90% max at rating			
	Remote On/Off		Provided(RC open : On, short between RC and +Vin : Off)			
Environment	Operating Temperature	℃	-40 - +85			
	Storage Temperature	℃	-40 - +85			
	Operating Humidity	% RH	5 - 95 (conditoin of maximum 38℃ in wet bulb temperature and non-condensation should be ensured.)			
	Storage Humidity	% RH	5 - 95 (conditoin of maximum 38℃ in wet bulb temperature and non-condensation should be ensured.)			
	Vibration		10-55Hz, 15 minutes sweep amd 1.52mm total amplitude, 3 directions, 2h for each			
	Shock		980m/S^2 (100G), 6mS, 6 directions, 3 times for each, in non-operation.			
Isolation	Input - outpit		Product with case:DC1,000V or AC500V 1 minute, Cutoff current = 100mA (20±15℃)			
	Input - Case		Product with case:DC500V or AC500V 1 minute, Cutoff current = 100mA (20±15℃)			
	Output - Case		Product with case:DC500V or AC500V 1 minute, Cutoff current = 100mA (20±15℃)			
	Isoration Resistance		Product with case : Input-Output, Input-Case, Output-Case : DC500V 50MΩmin (20±15℃)			
	Input - outpit		Product without case:DC1,500V 1 minute, Cutoff current = 100mA (20±15℃)			
	Isoration Resistance		Product without case : Input-Output : DC500V 50MΩmin (20±15℃)			
Standards	Safety Standards		UL60950-1, CSA C22.2 No.60950-1(C-UL), EN60950-1(NEMKO)			
Mechanical	Weight (typ)	g	Product with case : 12 .5typ 15max , Product without case : 8typ 10max			
	Size (W×H×D)	mm	Product with case : DIP:38.4×6.8×29.6 , SMD:39.9×6.8×29.6			
			Product without case : DIP:37.9×5.0×27.6 , SMD:39.9×5.0×27.6			

Note: ”X” in model names is to be replaced by a symbol which represents the terminal configuration (F : DIP / R : SMD) and with or without the metal case (P : With case / H : Without case) for actual model names

Note: With nominal input voltage, maximum output current, and Ta=25℃, if not specified separately.

(*1) With nominal input voltage, maximum output current, and Ta=25℃

(*2) In 50MHz, Ta=25℃

Specifications

CC15-48xxSxx-E Specifications

Items/Units \ Model			CC15-4803Sxx-E	CC15-4805Sxx-E	CC15-4812Sxx-E	CC15-4815Sxx-E
Input	Nominal Voltage	V	DC48.0			
	Voletage Range	V	DC36 - 78			
	Efficiency typ (*1)	%	89.0	90.0	89.0	89.0
	Current typ (*1)	A	0.35	0.35	0.35	0.35
	Start-Up Voletage	V	DC32 - 36			
	Hysteresis Voletage	V	DC2 min			
Output	Nominal Voltage	V	3.3	5	12	15
	Maximum Current	A	4.5	3	1.25	1
	Voltage Accuracy max	%	+5%, -3%			
	Ripple & Noise max (*2)	mVp-p	50mV		150mV	
	Start-Up Time	mS	20 - 100			
	Outpit Voltage Setting (*1)	%	±1% of nominal output voltage			
Function	Over Current Protection		Works over 103% of rating			
	Over Voltage Protection		Works at 115 - 145% of rating			
	Low Voltege Protection		Works at 90% max at rating			
	Remote On/Off		Provided(RC open : On, short between RC and +Vin : Off)			
Environment	Operating Temperature	℃	-40 - +85			
	Storage Temperature	℃	-40 - +85			
	Operating Humidity	% RH	5 - 95 (conditoin of maximum 38℃ in wet bulb temperature and non-condensation should be ensured.)			
	Storage Humidity	% RH	5 - 95 (conditoin of maximum 38℃ in wet bulb temperature and non-condensation should be ensured.)			
	Vibration		10-55Hz, 15 minutes sweep amd 1.52mm total amplitude, 3 directions, 2h for each			
	Shock		980m/S^2 (100G), 6mS, 6 directions, 3 times for each, in non-operation.			
Isolation	Input - outpit		Product with case:DC1,000V or AC500V 1 minute, Cutoff current = 100mA (20±15℃)			
	Input - Case		Product with case:DC500V or AC500V 1 minute, Cutoff current = 100mA (20±15℃)			
	Output - Case		Product with case:DC500V or AC500V 1 minute, Cutoff current = 100mA (20±15℃)			
	Isoration Resistance		Product with case : Input-Output, Input-Case, Output-Case : DC500V 50MΩmin (20±15℃)			
	Input - outpit		Product without case:DC1,500V 1 minute, Cutoff current = 100mA (20±15℃)			
	Isoration Resistance		Product without case : Input-Output : DC500V 50MΩmin (20±15℃)			
Standards	Safety Standards		UL60950-1, CSA C22.2 No.60950-1(C-UL), EN60950-1(NEMKO)			
Mechanical	Weight (typ)	g	Product with case : 12 .5typ 15max , Product without case : 8typ 10max			
	Size (W×H×D)	mm	Product with case : DIP:38.4×6.8×29.6 , SMD:39.9×6.8×29.6			
			Product without case : DIP:37.9×5.0×27.6 , SMD:39.9×5.0×27.6			

Note: ”X” in model names is to be replaced by a symbol which represents the terminal configuration (F : DIP / R : SMD) and with or without the metal case (P : With case / H : Without case) for actual model names

Note: With nominal input voltage, maximum output current, and Ta=25℃, if not specified separately.

(*1) With nominal input voltage, maximum output current, and Ta=25℃

(*2) In 50MHz, Ta=25℃

Specifications

CC30-24xxSxx-E Specifications

Items/Units \ Model			CC30-2403Sxx-E	CC30-2405Sxx-E	CC30-2412Sxx-E	CC30-2415Sxx-E
Input	Nominal Voltage	V	DC24.0			
	Voletage Range	V	DC18 - 36			
	Efficiency typ (*1)	%	91.5	92.0	92.0	92.0
	Current typ (*1)	A	1.36	1.36	1.36	1.36
	Start-Up Voletage	V	DC16 - 18			
	Hysteresis Voletage	V	DC1 min			
Output	Nominal Voltage	V	3.3	5	12	15
	Maximum Current	A	9	6	2.5	2
	Voltage Accuracy max	%	+5%, -3%			
	Ripple & Noise max (*2)	mVp-p	50mV		150mV	
	Start-Up Time	mS	20 - 100			
	Outpit Voltage Setting (*1)	%	±1% of nominal output voltage			
Function	Over Current Protection		Works over 103% of rating			
	Over Voltage Protection		Works at 115 - 145% of rating			
	Low Voltege Protection		Works at 90% max at rating			
	Remote On/Off		Provided(RC open : On, short between RC and +Vin : Off)			
Environment	Operating Temperature	℃	-40 - +85			
	Storage Temperature	℃	-40 - +85			
	Operating Humidity	% RH	5 - 95 (conditoin of maximum 38℃ in wet bulb temperature and non-condensation should be ensured.)			
	Storage Humidity	% RH	5 - 95 (conditoin of maximum 38℃ in wet bulb temperature and non-condensation should be ensured.)			
	Vibration		10-55Hz, 15 minutes sweep amd 1.52mm total amplitude, 3 directions, 2h for each			
	Shock		980m/S^2 (100G), 6mS, 6 directions, 3 times for each, in non-operation.			
Isolation	Input - outpit		Product with case:DC1,000V or AC500V 1 minute, Cutoff current = 100mA (20±15℃)			
	Input - Case		Product with case:DC500V or AC500V 1 minute, Cutoff current = 100mA (20±15℃)			
	Output - Case		Product with case:DC500V or AC500V 1 minute, Cutoff current = 100mA (20±15℃)			
	Isoration Resistance		Product with case : Input-Output, Input-Case, Output-Case : DC500V 50MΩmin (20±15℃)			
	Input - outpit		Product without case:DC1,500V 1 minute, Cutoff current = 100mA (20±15℃)			
	Isoration Resistance		Product without case : Input-Output : DC500V 50MΩmin (20±15℃)			
Standards	Safety Standards		UL60950-1, CSA C22.2 No.60950-1(C-UL), EN60950-1(NEMKO)			
Mechanical	Weight (typ)	g	Product with case : 18 typ 20max , Product without case : 13.5 typ 15max			
	Size (W×H×D)	mm	Product with case : DIP:38.4×8.3×33.5 , SMD:39.9×8.3×33.5			
			Product without case : DIP:37.9×6.5×31.6 , SMD:39.9×6.5×31.6			

Note: ”X” in model names is to be replaced by a symbol which represents the terminal configuration (F : DIP / R : SMD) and with or without the metal case (P : With case / H : Without case) for actual model names

Note: With nominal input voltage, maximum output current, and Ta=25℃, if not specified separately.

(*1) With nominal input voltage, maximum output current, and Ta=25℃

(*2) In 50MHz, Ta=25℃

Specifications

CC30-48xxSxx-E Specifications

Items/Units \ Model			CC30-4803Sxx-E	CC30-4805Sxx-E	CC30-4812Sxx-E	CC30-4815Sxx-E
Input	Nominal Voltage	V	DC48.0			
	Voletage Range	V	DC36 - 76			
	Efficiency typ (*1)	%	91.0	92.5	92.5	92.0
	Current typ (*1)	A	0.67	0.68	0.68	0.68
	Start-Up Voletage	V	DC32 - 36			
	Hysteresis Voletage	V	DC2 min			
Output	Nominal Voltage	V	3.3	5	12	15
	Maximum Current	A	9	6	2.5	2
	Voltage Accuracy max	%	+5%, -3%			
	Ripple & Noise max (*2)	mVp-p	50mV		150mV	
	Start-Up Time	mS	20 - 100			
	Outpit Voltage Setting (*1)	%	±1% of nominal output voltage			
Function	Over Current Protection		Works over 103% of rating			
	Over Voltage Protection		Works at 115 - 145% of rating			
	Low Voltege Protection		Works at 90% max at rating			
	Remote On/Off		Provided(RC open : On, short between RC and +Vin : Off)			
Environment	Operating Temperature	℃	-40 - +85			
	Storage Temperature	℃	-40 - +85			
	Operating Humidity	% RH	5 - 95 (conditoin of maximum 38℃ in wet bulb temperature and non-condensation should be ensured.)			
	Storage Humidity	% RH	5 - 95 (conditoin of maximum 38℃ in wet bulb temperature and non-condensation should be ensured.)			
	Vibration		10-55Hz, 15 minutes sweep amd 1.52mm total amplitude, 3 directions, 2h for each			
	Shock		980m/S^2 (100G), 6mS, 6 directions, 3 times for each, in non-operation.			
Isolation	Input - outpit		Product with case:DC1,000V or AC500V 1 minute, Cutoff current = 100mA (20±15℃)			
	Input - Case		Product with case:DC500V or AC500V 1 minute, Cutoff current = 100mA (20±15℃)			
	Output - Case		Product with case:DC500V or AC500V 1 minute, Cutoff current = 100mA (20±15℃)			
	Isoration Resistance		Product with case : Input-Output, Input-Case, Output-Case : DC500V 50MΩmin (20±15℃)			
	Input - outpit		Product without case:DC1,500V 1 minute, Cutoff current = 100mA (20±15℃)			
	Isoration Resistance		Product without case : Input-Output : DC500V 50MΩmin (20±15℃)			
Standards	Safety Standards		UL60950-1, CSA C22.2 No.60950-1(C-UL), EN60950-1(NEMKO)			
Mechanical	Weight (typ)	g	Product with case : 18 typ 20max , Product without case : 13.5 typ 15max			
	Size (W×H×D)	mm	Product with case : DIP:38.4×8.3×33.5 , SMD:39.9×8.3×33.5			
			Product without case : DIP:37.9×6.5×31.6 , SMD:39.9×6.5×31.6			

Note: ”X” in model names is to be replaced by a symbol which represents the terminal configuration (F : DIP / R : SMD) and with or without the metal case (P : With case / H : Without case) for actual model names

Note: With nominal input voltage, maximum output current, and Ta=25℃, if not specified separately.

(*1) With nominal input voltage, maximum output current, and Ta=25℃

(*2) In 50MHz, Ta=25℃

Block diagram

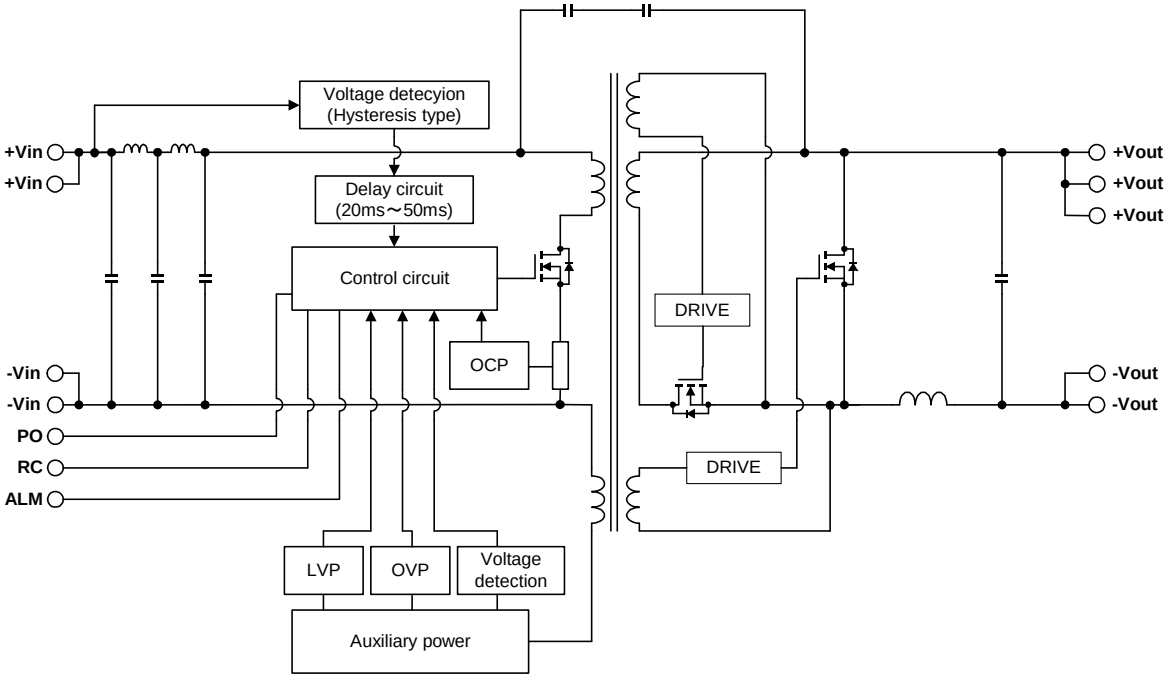

Shapes and Dimensions (CC15-xxxxSFP-E)

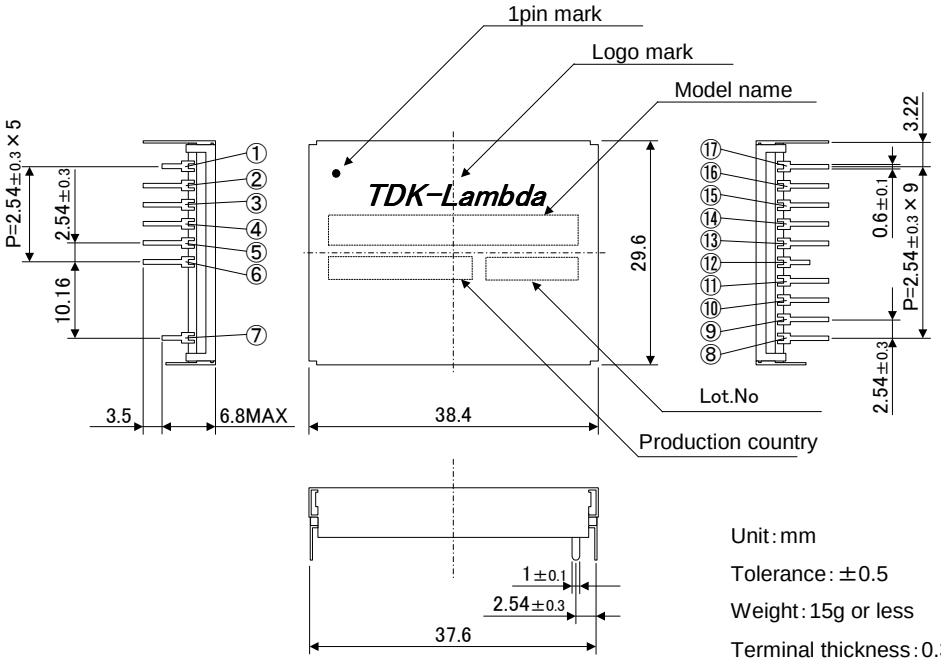

Unit : mm
Tolerance : ±0.5
Weight : 15g or less
Terminal thickness : 0.3±0.1
Terminal material : Phoshor bronze
Plating treatment of terminal : Sn with Ni barreir
Case thickness : 0.3±0.1
Case material : Stainless
Plating teatment of case : Ni

Product Lot No marking method

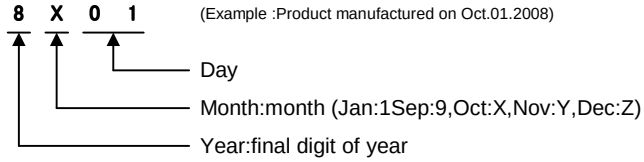

Terminal Pin function

Terminal pin No.	Pin name	Function
1	Stopper	Stopper
2	+Vout	+DC output
3	+Vout	+DC output
4	+Vout	+DC output
5	-Vout	-DC output
6	-Vout	-DC output
7	Stopper	Stopper
8	NC	Not connected
9	ALM	Alarm
10	RC	Remote control
11	PO	Start in / out
12	Stopper	Stopper
13	+Vin	+DC input
14	+Vin	+DC input
15	-Vin	-DC input
16	-Vin	-DC input
17	NC	Not connected

*Case connecting pin (Isolated from internal circuit)

Recommended size for processing PCB(CC15-xxxxSFP-E)（TOP VIEW）

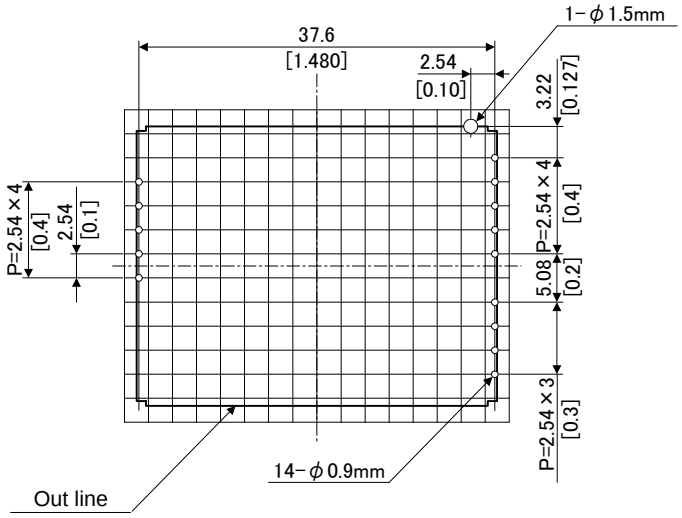

Unit: mm / [inch]
Div: 0.1inch

Installation method

When installing the converter on the board, avoid having trace pattern, etc. in the slanted line area shown in the figure below because there is the possibility of an insulation defect occurring.

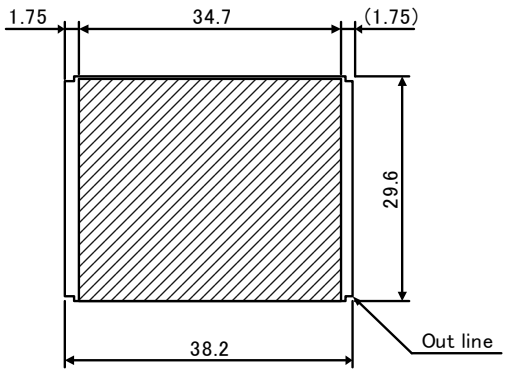

CC15−xxxxxSx−E

Shapes and Dimensions (CC15-xxxxSRP-E)

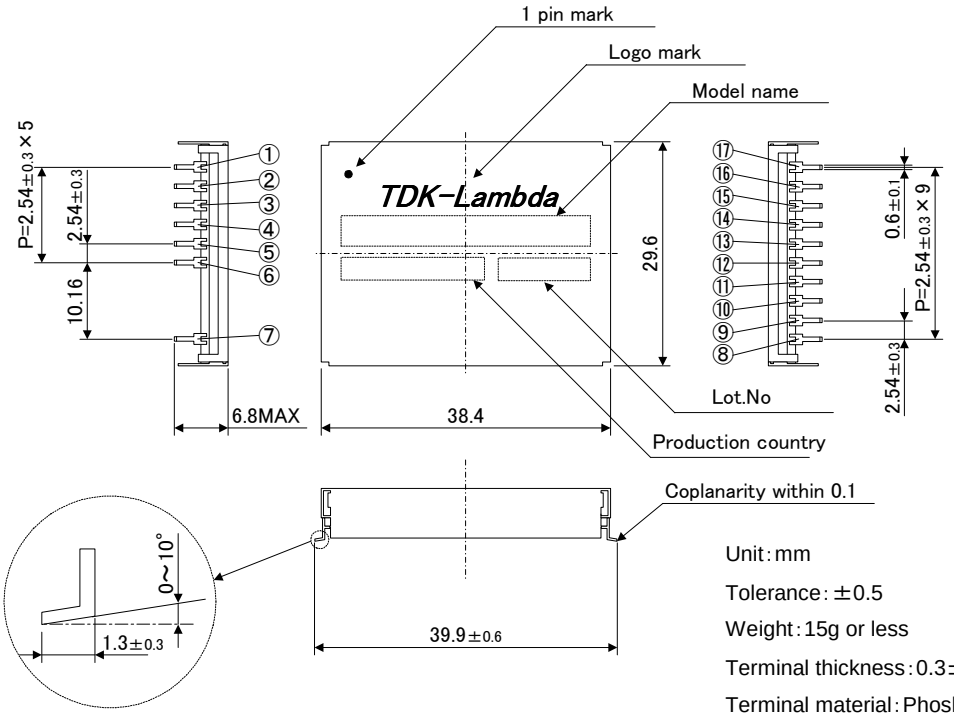

Unit: mm

Tolerance: ±0.5

Weight: 15g or less

Terminal thickness: 0.3±0.1

Terminal material: Phoshor bronze

Plating treatment of terminal: Sn with Ni barreir

Case thickness: 0.3±0.1

Case material: Stainless

Plating teatment of case: Ni

Product Lot No marking method

8 X 0 1 (Example :Product manufactured on Oct.01.2008)

Day

Month:month (Jan:1Sep:9,Oct:X,Nov:Y,Dec:Z)

Year:final digit of year

Terminal Pin function

Terminal pin No.	Pin name	Function
1	NC	Not connected
2	+Vout	+DC output
3	+Vout	+DC output
4	+Vout	+DC output
5	-Vout	-DC output
6	-Vout	-DC output
7	NC	Not connected
8	NC	Not connected
9	ALM	Alarm
10	RC	Remote control
11	PO	Start in / out
12	NC	Not connected
13	+Vin	+DC input
14	+Vin	+DC input
15	-Vin	-DC input
16	-Vin	-DC input
17	NC	Not connected

*Pin No. 1,7,8, 17 : Adhesive dispensing.

Recommended size for processing PCB (CC15-xxxxSRP-E)（TOP VIEW）

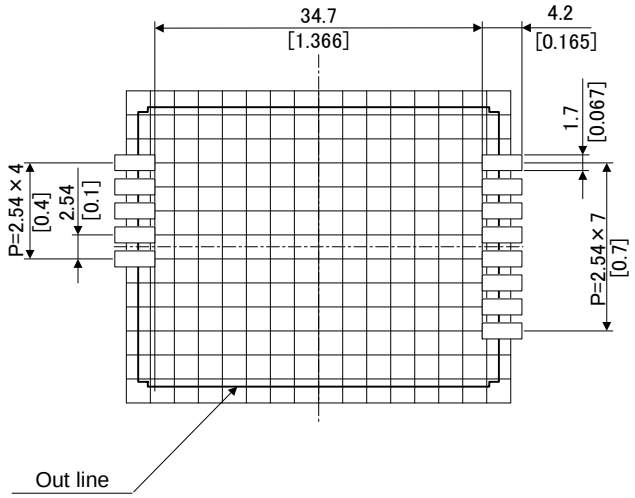

Unit mm / [inch]
Div: 0.1inch

Installation method

When installing the converter on the board, avoid having trace pattern, etc. in the slanted line area shown in the figure below because there is the possibility of an insulation defect occurring.

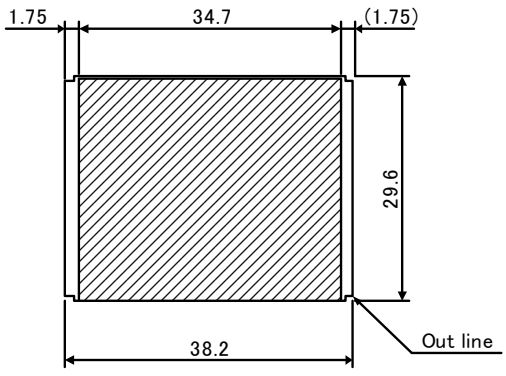

CC15-xxxxxSx-E

Shapes and Dimensions (CC30-xxxxSFP-E)

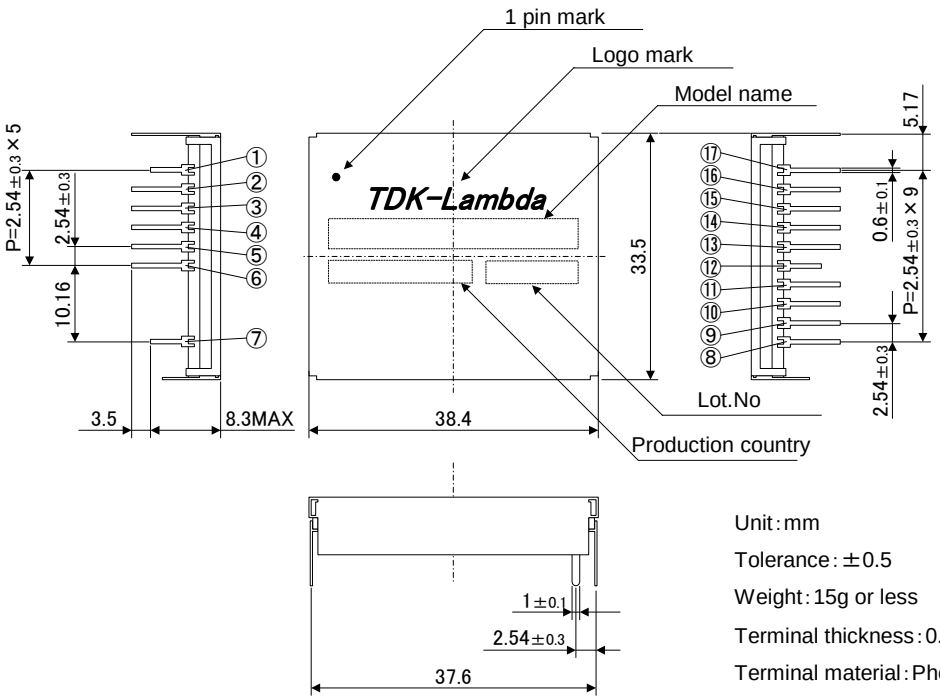

Unit : mm

Tolerance : ±0.5

Weight : 15g or less

Terminal thickness : 0.3±0.1

Terminal material : Phoshor bronze

Plating treatment of terminal : Sn with Ni barreir

Case thickness : 0.3±0.1

Case material : Stainless

Plating teatment of case : Ni

Product Lot No marking method

8 X 0 1 (Example :Product manufactured on Oct.01.2008)

Day

Month:month (Jan:1Sep:9,Oct:X,Nov:Y,Dec:Z)

Year:final digit of year

Terminal Pin function

Terminal pin No.	Pin name	Function
1	Stopper	Stopper
2	+Vout	+DC output
3	+Vout	+DC output
4	+Vout	+DC output
5	-Vout	-DC output
6	-Vout	-DC output
7	Stopper	Stopper
8	NC	Not connected
9	ALM	Alarm
10	RC	Remote control
11	PO	Start in / out
12	Stopper	Stopper
13	+Vin	+DC input
14	+Vin	+DC input
15	-Vin	-DC input
16	-Vin	-DC input
17	NC	Not connected

*Case connecting pin (Isolated from internal circuit)

Recommended size for processing PCB (CC30-xxxxSFP-E)（TOP VIEW）

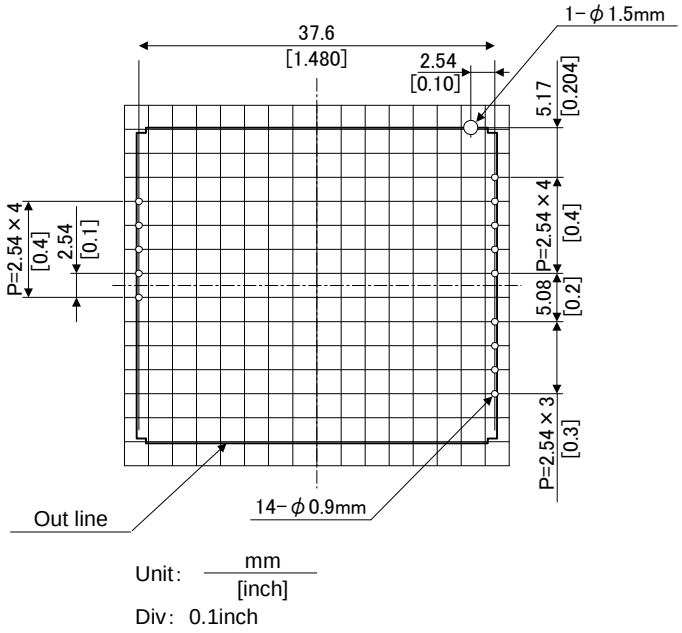

Installation method

When installing the converter on the board, avoid having trace pattern, etc. in the slanted line area shown in the figure below because there is the possibility of an insulation defect occurring.

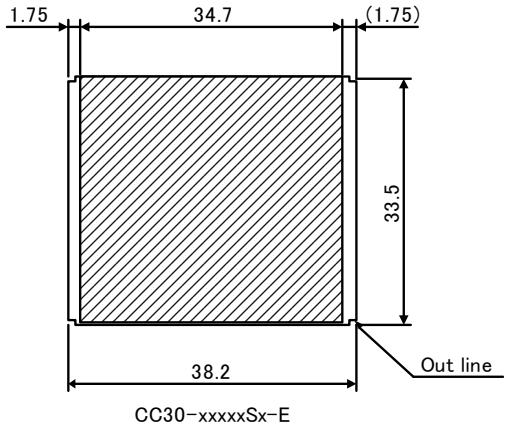

Shapes and Dimensions (CC30-xxxxSRP-E)

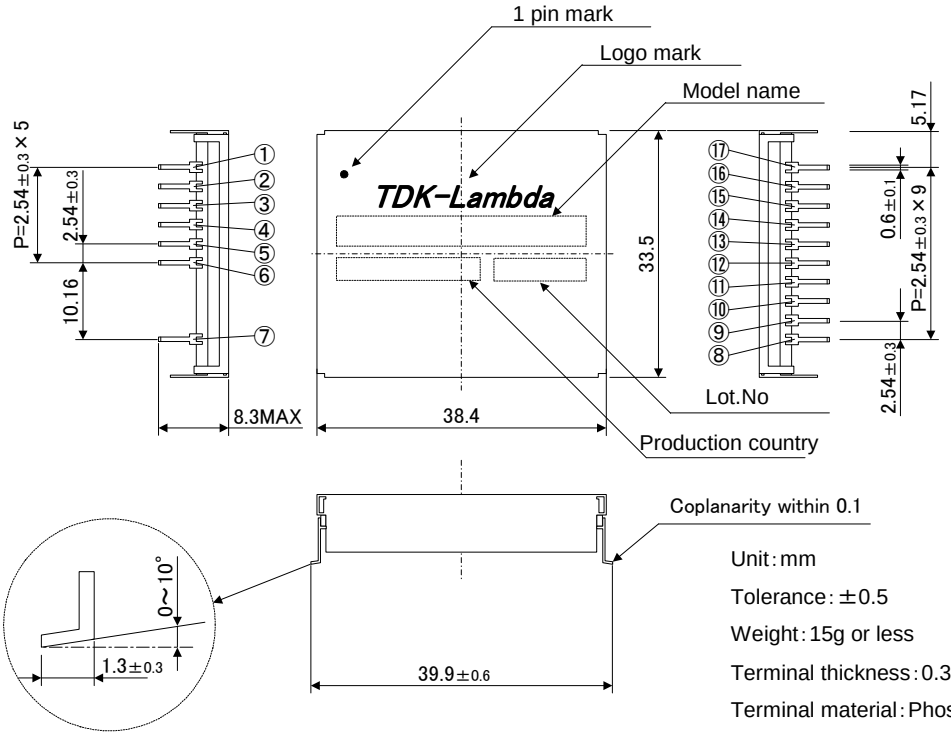

Unit : mm

Tolerance : ±0.5

Weight : 15g or less

Terminal thickness : 0.3±0.1

Terminal material : Phoshor bronze

Plating treatment of terminal : Sn with Ni barreir

Case thickness : 0.3±0.1

Case material : Stainless

Plating teatment of case : Ni

Product Lot No marking method

8 X 0 1 (Example :Product manufactured on Oct.01.2008)

- Day
- Month:month (Jan:1Sep:9,Oct:X,Nov:Y,Dec:Z)
- Year:final digit of year

Terminal Pin function

Terminal pin No.	Pin name	Function
1	NC	Not connected
2	+Vout	+DC output
3	+Vout	+DC output
4	+Vout	+DC output
5	-Vout	-DC output
6	-Vout	-DC output
7	NC	Not connected
8	NC	Not connected
9	ALM	Alarm
10	RC	Remote control
11	PO	Start in / out
12	NC	Not connected
13	+Vin	+DC input
14	+Vin	+DC input
15	-Vin	-DC input
16	-Vin	-DC input
17	NC	Not connected

*Pin No. 1,7,8, 17 : Adhesive dispensing.

Recommended size for processing PCB (CC30-xxxxSRP-E)（TOP VIEW）

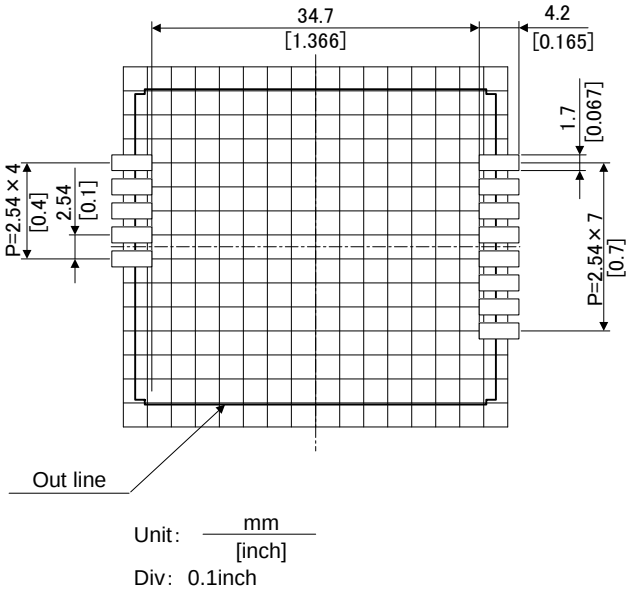

Installation method

When installing the converter on the board, avoid having trace pattern, etc. in the slanted line area shown in the figure below because there is the possibility of an insulation defect occurring.

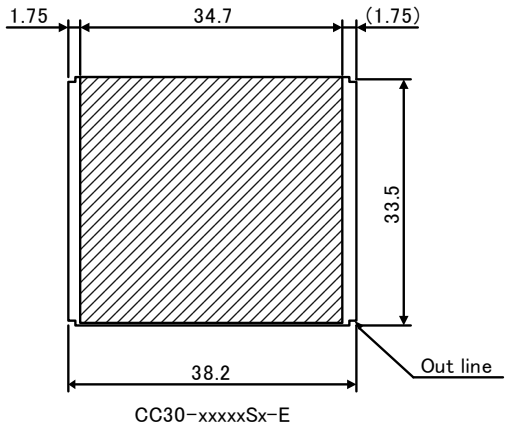

To use it safely

Please confirm details with specifications when using it.
Please read safety instructions(4CA-1221458-X).

PRINTED IN JAPAN（Nov.10.2009）

SAFETY INSTRUCTIONS

Safety attention manual **Notes that use DC to DC converter**

Please be sure to read these instructions for safe design when using the product.
Improper use may pose the danger of smoke or fire.

Caution Notes

Storage

- Store the converter unit in the manner specified in the purchase specifications or catalog.
- Do not store the converter unit in a corrosive gas or corrosive dust environment.
- Do not store the converter unit in a strong electrical or magnetic field. It will cause damage.

Environment & Conditions of Use

- Do not operate the converter unit in a corrosive gas or corrosive dust environment.
- Operate the converter unit in the environment and under the conditions specified in the purchase specifications or catalog.
- Operate the input and output voltage, output current, etc. within the rated electrical specifications.
- This converter has no built-in over input voltage protection.
- A continuous over current condition may damage the converter.
- This DC to DC converter is not internally fused. To ensure safe operation and to receive each Safety Standards approvals, please install an external fuse (fast-blow type).
- Be sure to insulate the metal case bottom from surrounding components and trace pattern.
- Do not operate the converter unit in a strong electrical or magnetic field.
- If there is the possibility of surge voltages occurring, take surge voltage prevention countermeasures.
- Please do not touch the inside of the product because it could cause electric shock
- Please notes that do not enter the foreign object. because it could cause the breakdown, the ignition, and the electric shock.
- Do not change or modify the product , TDK will not be responsible for any damage due to modification.
- Do not remove or disassemble the case.
- The converter unit is not designed to be resistant to radiation. Do not use it in nuclear power controls medical equipment, etc.
- The converter unit is not designed to be resistant to radiation. Do not use it in nuclear power controls medical equipment, etc.
- Give due design consideration for safeguarding against personal injury, fire and other accidents.
- Give due design consideration for safeguarding against personal injury, fire and other accidents.
- The converter unit must be wired according to the measurement circuits given in the purchase specifications or catalog. Consult TDK concerning any other connection schemes to avoid possible damage.
- Do not inject reverse voltage or over voltage to the terminals from the outside because it could cause failure.

Notes

- The warranty period for this converter is five years, except for the following cases:
  - ∗ Malfunction or damage due to modification or incorrect operation.
  - ∗ Malfunction or damage due to transportation after the product has been delivered.
  - ∗ Malfunction or damage due to fire, earthquake, wind, flood, other natural disasters or abnormal voltages.
  - ∗ Malfunction or damage caused by other equipment connected to the product.
- Note that an extended storage (over 1 year) in a location of high temperature, humidity, or sudden temperature fluctuations may cause the solder connections to deteriorate.
- Do not apply any strong shock to the converter unit, such as dropping the product, etc. because it may cause damage to the terminal pins or to other parts.

PRINTED IN JAPAN

４ＣＡ－１２２１４５８