

- Compact Footprint / Low Profile
- 24V & 48V Inputs
- 3.3V to 15V Outputs
- Input - Output Isolation
- Through Hole or SMT Versions
- DC OK signal
- Sequencing pin
- 5 Year Warranty

CC-P-E Series

Ultra Compact, 15W to 30W DC-DC Converters

Key Market Segments & Applications

Process Control
Instrumentation
Datacom & Telecom

CC-E Features and Benefits

Features	Benefits
• Compact	• Less PCB Area Used
• Five Sided Shielding (cased version)	• Lower radiated EMI
• Parallel Operation	• Provides additional power

Specifications					
Nominal Output Voltage	V	3.3V	5V	12V	15V
DC Input	VDC	24V Nominal: 18-36V, 48V Nominal: 36-76V			
Efficiency	%	89 to 92% model dependant			
Initial set accuracy	%	±1%			
Total Regulation limits	%	+5%, -3%			
Output Adjustment	-	None			
Temperature Coefficient	%/°C	<0.02%/°C			
Preload	A	None			
Output Ripple	mV	50mV		150mV	
Overcurrent Protection	-	> 103% of nominal rating			
Overvoltage protection	-	Operates at 115 - 145% of nominal voltage			
Remote On/Off (RC)	-	Logic high (pull high to shutdown), referenced to -Vin			
Alarm (ALM)	-	Low On Fail, referenced to -Vin. 20 units maximum			
Sequencing (PO)	-	Connecting PO terminals on multiple power supplies ensures all simulataneously start up (20 units maximum)			
Cooling	-	Convection			
Operating Temp. Range	°C	-40°C to +85°C			
Storage Temperature	°C	-40°C to +85°C			
Humidity (Non condensing)	%RH	5 - 95%RH			
Isolation Voltage *(Cased version)*	VDC	Input/Output 1000VDC, Input/Case 500VDC, Output/Case 500VDC, 100mA for 1 min			
Isolation Voltage *(Uncased version)*	VDC	Input/Output 1500VDC, 100mA for 1 min			
Isolation Resistance *(Cased version)*	Ω	>50MΩ at 25°C and 70% RH, 500VDC Input/Output, Input/Case, Output/Case			
Isolation Resistance *(Uncased version)*	Ω	>50MΩ at 25°C and 70% RH, 500VDC Input/Output			
Shock (Non operating)	-	980m/s² (100G), 6ms, 6 directions, 3 times			
Vibration (non operating)	-	10-55-10 Hz (sweep for 15 min.) 1.52mm amplitude, 2 hour X, Y, Z			
Safety Agency Certifications	-	IEC/EN/UL/CSA60950-1, IEC/EN/UL/CSA62368-1 and CE Mark			
Weight	g	With case: CC15 15g, CC30 20g. Without case: CC15 10g, CC30 15g			
Size (LxWxH) (Thru hole ver., w/ case)	mm	CC15: 38.4 x 6.8 x 29.6mm, CC30: 38.4 x 8.3 x 33.5mm			
Warranty	yrs	5			

Notes: See Installation Manual for full specifications, test methods of parameters and application notes.

Model Selector

Output Voltage (V)	Output Current (A)	Max O/P Power (W)	24V Input	48V Input
3.3	4.5	15	CC15-2403SFP-E	CC15-4803SFP-E*
3.3	9	30	CC30-2403SFP-E	CC30-4803SFP-E*
5	3	15	CC15-2405SFP-E	CC15-4805SFP-E*
5	6	30	CC30-2405SFP-E	CC30-4805SFP-E*
12	1.25	15	CC15-2412SFP-E	CC15-4812SFP-E*
12	2.5	30	CC30-2412SFP-E	CC30-4812SFP-E*
15	1	15	CC15-2415SFP-E	CC15-4815SFP-E*
15	2	30	CC30-2415SFP-E	CC30-4815SFP-E*

***CC15 & CC30 48Vin models - last time buy March 2019**

Options

Version	PIN	Case
CCxx-yyyySFP-E*	Through hole	Yes
CCxx-yyyySFH-E	Through hole	No
CCxx-yyyySRP-E	SMT	Yes
CCxx-yyyySRH-E	SMT	No

Where xx is output power & yyyy is input and output voltage combination. * denotes preferred model

Pinout SFP-E Models

Pin	Pin Name	Function
1	Stopper	Stopper
2	+Vout	+DC output
3	+Vout	+DC output
4	+Vout	+DC output
5	-Vout	-DC output
6	-Vout	-DC output
7	Stopper	Stopper
8	NC	Not connected
9	ALM	Alarm
10	RC	Remote control
11	PO	Start in / out
12	Stopper	Stopper
13	+Vin	+DC input
14	+Vin	+DC input
15	-Vin	-DC input
16	-Vin	-DC input
17	NC	Not connected

Pinout SRP-E Models

Pin	Pin Name	Function
1	NC	Not connected
2	+Vout	+DC output
3	+Vout	+DC output
4	+Vout	+DC output
5	-Vout	-DC output
6	-Vout	-DC output
7	NC	Not connected
8	NC	Not connected
9	ALM	Alarm
10	RC	Remote control
11	PO	Start in / out
12	NC	Not connected
13	+Vin	+DC input
14	+Vin	+DC input
15	-Vin	-DC input
16	-Vin	-DC input
17	NC	Not connected

Outline Drawing CC15-xxxxSFP-E Series

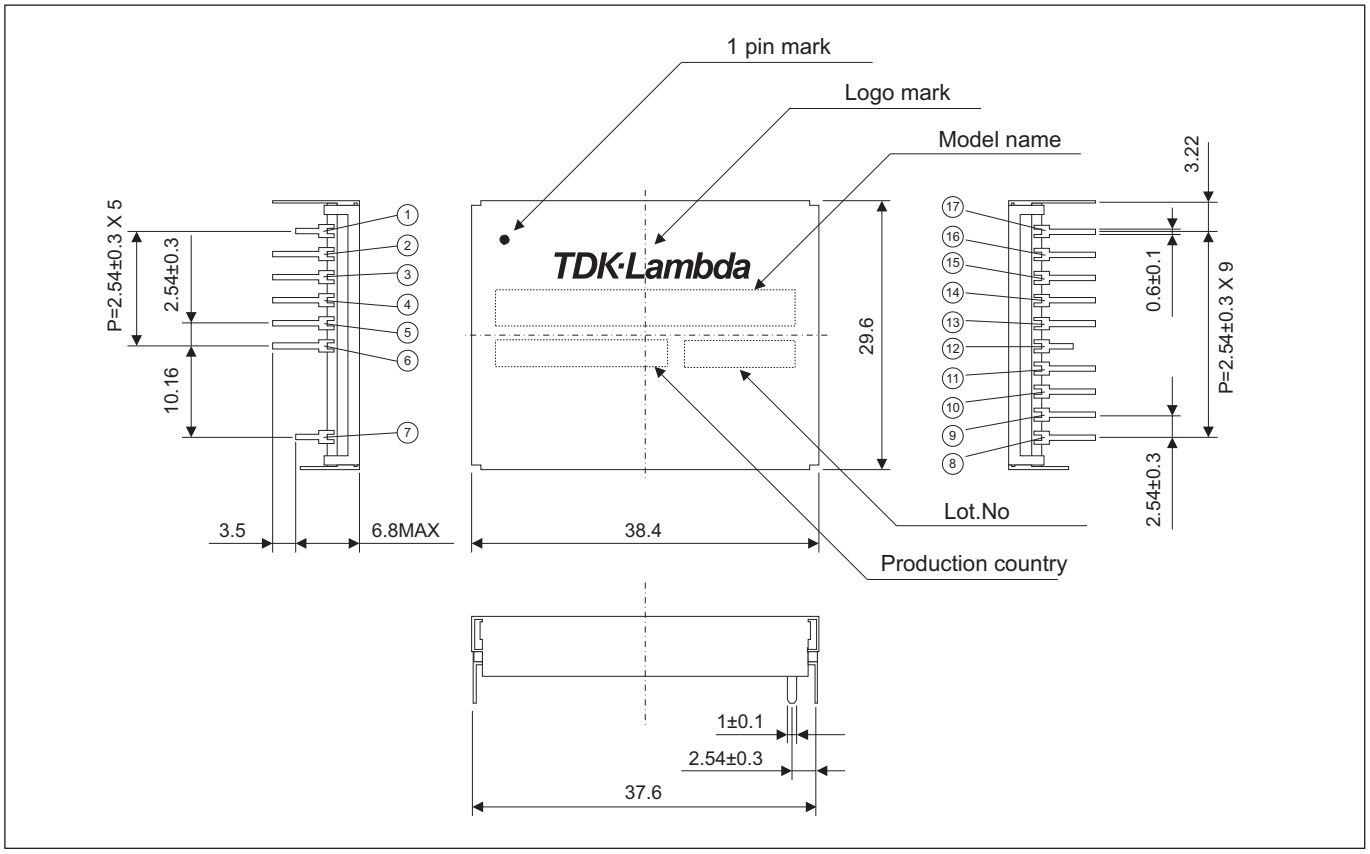

Outline Drawing CC30-xxxxSRP-E Series

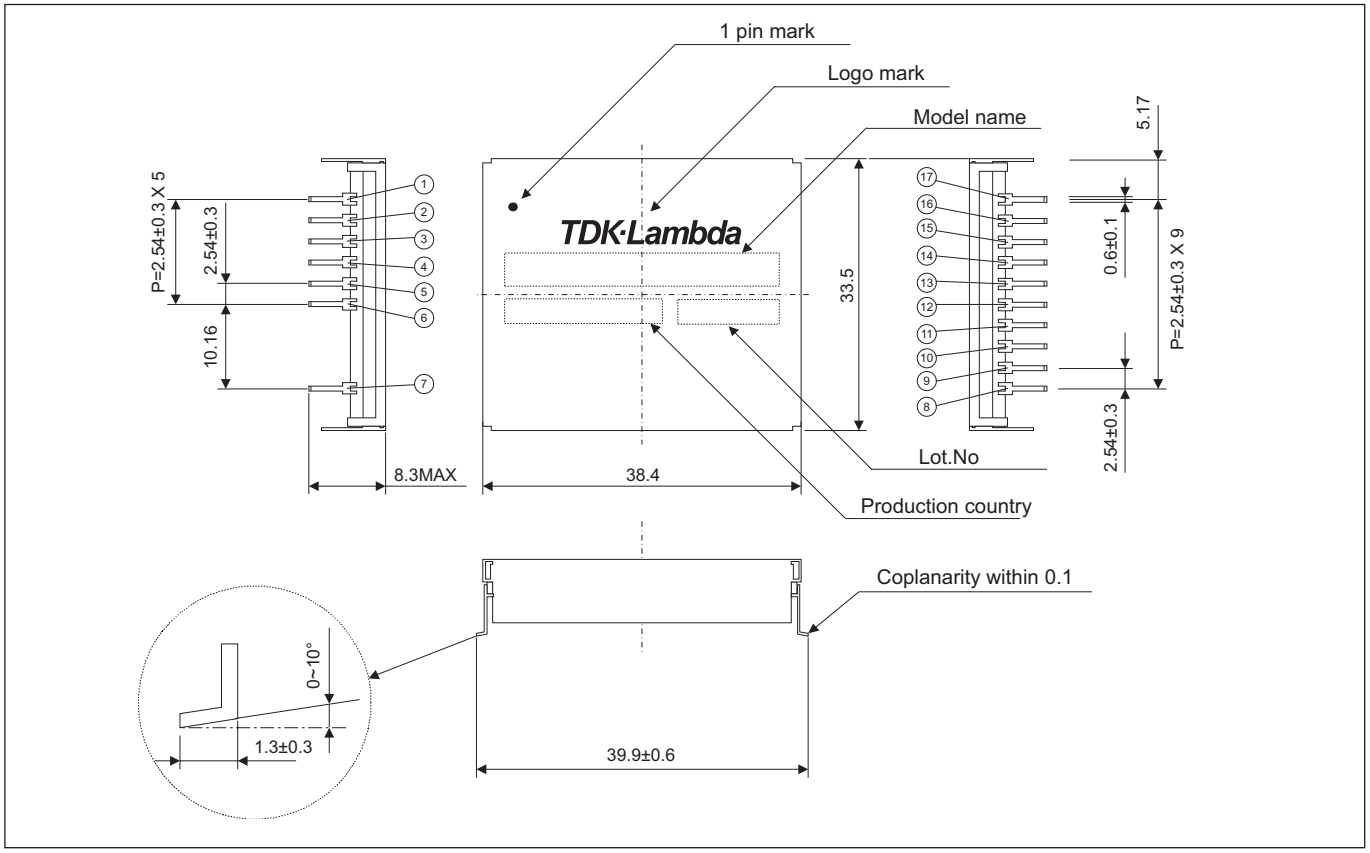



TDK-Lambda France SAS
3 Avenue du Canada
Parc Technopolis
Bâtiment Sigma
91940 les Ulis
France
Tel: +33 1 60 12 71 65
Fax: +33 1 60 12 71 66
france@fr.tdk-lambda.com
www.fr.tdk-lambda.com



Italy Sales Office
Via Giacomo Matteotti 62
20092 Cinisello Balsamo (MI)
Italy
Tel: +39 02 61 29 38 63
Fax: +39 02 61 29 09 00
info.italia@it.tdk-lambda.com
www.it.tdk-lambda.com



Netherlands
info@nl.tdk-lambda.com
www.nl.tdk-lambda.com



TDK-Lambda Germany GmbH
Karl-Bold-Strasse 40
77855 Achern
Germany
Tel: +49 7841 666 0
Fax: +49 7841 5000
info.germany@de.tdk-lambda.com
www.de.tdk-lambda.com



Austria Sales Office
Aredstrasse 22
2544 Leobersdorf
Austria
Tel: +43 2256 655 84
Fax: +43 2256 645 12
info@at.tdk-lambda.com
www.de.tdk-lambda.com



Switzerland Sales Office
Eichtalstrasse 55
8634 Hombrechtikon
Switzerland
Tel: +41 44 850 53 53
Fax: +41 44 850 53 50
info@ch.tdk-lambda.com
www.de.tdk-lambda.com



Nordic Sales Office
Haderslevvej 36B
DK-6000 Kolding
Denmark
Tel: +45 8853 8086
info@dk.tdk-lambda.com

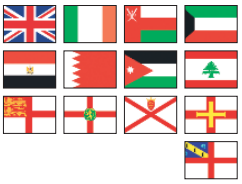

TDK-Lambda UK Ltd.
Kingsley Avenue
Ilfracombe
Devon EX34 8ES
United Kingdom
Tel: +44 (0) 12 71 85 66 66
Fax: +44 (0) 12 71 86 48 94
powersolutions@uk.tdk-lambda.com
www.uk.tdk-lambda.com



TDK-Lambda Ltd.
1 Alexander Yanai
Segula
Petah-Tikva
Israel
Tel: +9 723 902 4333
Fax: +9 723 902 4777
info@tdk-lambda.co.il
www.tdk-lambda.co.il



C.I.S.
Commercial Support:
Tel: +7 (495) 665 2627
Technical Support:
Tel: +7 (812) 658 0463
info@tdk-lambda.ru
www.tdk-lambda.ru

Local Distribution

www.emea.tdk-lambda.com