https://product.tdk.com/en/power/cc-e
www.emea.lambda.tdk.com/cc-e

1.3 to 10W DC-DC Converters



Industrial Test COMM Broadcast

The low profile, lightweight CC-E series of isolated DC-DC converters operate from 4.5 to 9V, 9 to 18V, 18 to 36V or 36 to 76V inputs with 1.5W, 3W, 6W and 10W power levels and output voltages from 3.3V to 30V(1)(2). Both single and dual output models can be adjusted using the trim terminal. The CC-E can operate in ambient temperatures of -40 to 85°C and have an input to output isolation of 500Vac. Both through hole and surface mount packages are offered. The five-sided metal case reduces radiated noise.

Features	Benefits
• Low Profile	• Supports Vertical Mount Cards
• Remote on/off	• Individual Control
• Five Sided Metal Case Design	• Reduced Radiated Noise
• Reduced Derating at High Ambient Temperatures	• More Useable Power
• No Potting	• Low Weight

Part Numbering Scheme

CC	1R5	-05	03	S	F	-E
Series Name CC	Output Power 1R5 = 1.5W, 3 = 3W 6 = 6W, 10 = 10W	Input Voltage 05 = 4.5 - 9V 12 = 9 - 18V 24 = 18 - 36V 48 = 36 - 76V	Output Voltage 03 = 3.3V 05 = 5V 12 = 12V 15 = 15V	S = Single Output D = Dual Output	Mounting Type F = Through hole R = Surface Mount S = Vertical SIP (CC3 only)	

Model Selector - Single Output

Model Note:Letter ""x"" indicates mounting type x=F through hole, x=R surface mount x=S SIP (CC3 only)	Input Voltage (V)	Output Voltage[1] (V)	Output Current[1] (A)	Maximum Power (W)	Input Current at nominal input (A)	Efficiency (%) (100% load, nominal input)	Line / Load Regulation (mV)
CC1R5-0503Sx-E	4.5 - 9	3.3	0.4	1.32	0.372	71	20 / 40
CC3-0503Sx-E		3.3	0.8	2.64	0.732	73	20 / 40
CC6-0503Sx-E		3.3	1.2	3.96	1.042	76	20 / 40
CC10-0503Sx-E		3.3	2.5	8.25	1.964	84	20 / 40
CC1R5-0505Sx-E		5	0.3	1.5	0.39	77	20 / 40
CC3-0505Sx-E		5	0.6	3	0.779	77	20 / 40
CC6-0505Sx-E		5	1	5	1.266	79	20 / 40
CC10-0505Sx-E		5	2	10	2.381	84	20 / 40
CC1R5-0512Sx-E		12 / 15	0.125 / 0.1	1.5	0.375	80	40 / 100
CC3-0512Sx-E		12 / 15	0.25 / 0.2	3	0.732	82	40 / 100
CC6-0512Sx-E		12 / 15	0.5 / 0.4	6	1.463	82	40 / 100
CC10-0512Sx-E		12 / 15	0.8 / 0.64	9.6	2.286	84	40 / 100
CC1R5-1203Sx-E	9 - 18	3.3	0.4	1.32	0.151	73	20 / 40
CC3-1203Sx-E		3.3	0.8	2.64	0.297	74	20 / 40
CC6-1203Sx-E		3.3	1.2	3.96	0.423	78	20 / 40
CC10-1203Sx-E		3.3	2.5	8.25	0.818	84	20 / 40
CC1R5-1205Sx-E		5	0.3	1.5	0.16	78	20 / 40
CC3-1205Sx-E		5	0.6	3	0.316	79	20 / 40
CC6-1205Sx-E		5	1.2	6	0.61	82	20 / 40
CC10-1205Sx-E		5	2	10	0.969	86	20 / 40
CC1R5-1212Sx-E		12 / 15	0.125 / 0.1	1.5	0.152	82	40 / 100
CC3-1212Sx-E		12 / 15	0.25 / 0.2	3	0.305	82	40 / 100
CC6-1212Sx-E		12 / 15	0.5 / 0.4	6	0.588	85	40 / 100
CC10-1212Sx-E		12 / 15	1 / 0.8	12	1.136	88	40 / 100
CC1R5-2403Sx-E	18 - 36	3.3	0.4	1.32	0.076	72	20 / 40
CC3-2403Sx-E		3.3	0.8	2.64	0.151	73	20 / 40
CC6-2403Sx-E		3.3	1.2	3.96	0.214	77	20 / 40
CC10-2403Sx-E		3.3	2.5	8.25	0.409	84	20 / 40
CC1R5-2405Sx-E		5	0.3	1.5	0.081	77	20 / 40
CC3-2405Sx-E		5	0.6	3	0.16	78	20 / 40
CC6-2405Sx-E		5	1.2	6	0.309	81	20 / 40
CC10-2405Sx-E		5	2	10	0.484	86	20 / 40
CC1R5-2412Sx-E		12 / 15	0.125 / 0.1	1.5	0.077	81	40 / 100
CC3-2412Sx-E		12 / 15	0.25 / 0.2	3	0.152	82	40 / 100
CC6-2412Sx-E		12 / 15	0.5 / 0.4	6	0.287	87	40 / 100
CC10-2412Sx-E		12 / 15	1 / 0.8	12	0.575	87	40 / 100
CC1R5-4803Sx-E	36 - 76	3.3	0.4	1.32	0.039	70	20 / 40
CC3-4803Sx-E		3.3	0.8	2.64	0.075	73	20 / 40
CC6-4803Sx-E		3.3	1.2	3.96	0.107	77	20 / 40
CC10-4803Sx-E		3.3	2.5	8.25	0.205	84	20 / 40
CC1R5-4805Sx-E		5	0.3	1.5	0.041	76	20 / 40
CC3-4805Sx-E		5	0.6	3	0.079	79	20 / 40
CC6-4805Sx-E		5	1.2	6	0.154	81	20 / 40
CC10-4805Sx-E		5	2	10	0.242	86	20 / 40
CC1R5-4812Sx-E		12 / 15	0.125 / 0.1	1.5	0.039	80	40 / 100
CC3-4812Sx-E		12 / 15	0.25 / 0.2	3	0.077	81	40 / 100
CC6-4812Sx-E		12 / 15	0.5 / 0.4	6	0.145	86	40 / 100
CC10-4812Sx-E		12 / 15	1 / 0.8	12	0.284	88	40 / 100

Model Selector - Dual Output

Model Note:Letter ""x"" indicates mounting type x=F through hole, x=R surface mount	Input Voltage (V)	Output Voltage[1][2] (V)	Output Current[1] (A)	Maximum Power (W)	Input Current at nominal input (A)	Efficiency (%) (100% load, nominal input)	Line / Load Regulation[3] (mV)
CC1R5-0512Dx-E	4.5 - 9	±12 / ±15	±0.06 / ±0.05	1.5	0.38	79	80 / 600
CC3-0512Dx-E		±12 / ±15	±0.125 / ±0.1	3	0.741	81	80 / 600
CC6-0512DF-E		±12 / ±15	±0.25 / ±0.2	6	1.463	82	80 / 600
CC10-0512DF-E		±12 / ±15	±0.4 / ±0.32	9.6	2.313	83	80 / 600
CC1R5-1212Dx-E	9 - 18	±12 / ±15	±0.06 / ±0.05	1.5	0.154	81	80 / 600
CC3-1212Dx-E		±12 / ±15	±0.125 / ±0.1	3	0.309	81	80 / 600
CC6-1212Dx-E		±12 / ±15	±0.25 / ±0.2	6	0.588	85	80 / 600
CC10-1212Dx-E		±12 / ±15	±0.45 / ±0.36	10.8	1.047	86	80 / 600
CC1R5-2412Dx-E	18 - 36	±12 / ±15	±0.06 / ±0.05	1.5	0.079	79	80 / 600
CC3-2412Dx-E		±12 / ±15	±0.125 / ±0.1	3	0.154	81	80 / 600
CC6-2412Dx-E		±12 / ±15	±0.25 / ±0.2	6	0.291	86	80 / 600
CC10-2412Dx-E		±12 / ±15	±0.45 / ±0.36	10.8	0.523	86	80 / 600
CC1R5-4812Dx-E	36 - 76	±12 / ±15	±0.06 / ±0.05	1.5	0.04	79	80 / 600
CC3-4812Dx-E		±12 / ±15	±0.125 / ±0.1	3	0.078	80	80 / 600
CC6-4812Dx-E		±12 / ±15	±0.25 / ±0.2	6	0.145	86	80 / 600
CC10-4812Dx-E		±12 / ±15	±0.45 / ±0.36	10.8	0.262	86	80 / 600

Notes

(1) 12V single and dual output models can be set to 15V by connecting the trim terminal to -Vout. See Instruction Manual for further details

(2) ±12V dual output models can provide a 24V single output by utilizing just the +Vout and -Vout pins, leaving the COM unconnected. Similarly ±15V dual output models can be used as a 30V single output.

(3) Based upon equal load current from both outputs

Specifications

Model		CC1R5	CC3	CC6	CC10
Input					
Input Voltage Range	-	See model selector table			
Efficiency	-	See model selector table			
Conducted & Radiated EMI	-	See Instruction Manual on website for suggested external filtering			
Safety Certifications and Markings	-	IEC/UL/CSA/EN62368-1, CE Mark and UKCA Mark			
Output					
Output Voltage Tolerance	%	±3			
Output Voltage Adjustment	V	3.3V: 3.15-3.6, 5V: 4.75-6.0, 12V: 11.4-15			
Total Regulation	%	Single output: ±3, dual output: ±5			
Ripple & Noise	mV	3.3/5V: 120 (40 typical), 12/15V 120 (30 typical)			
Temperature Coefficient	%/°C	0.02			
Minimum Load	-	No minimum load required			
Overcurrent Protection	%	Hiccup mode. ≥105			
Overvoltage Protection	-	-			
Overtemperature Protection	-	-			
Remote Sense	-	No remote sense			
Remote On/Off	-	Negative Logic ON: Short , OFF: Open			
Parallel Operation	-	Not possible			

Specifications

Model		CC1R5	CC3	CC6	CC10
Environmental					
Operating Temperature	°C	-40 to +85 (Ambient). See derating guide below and installation manual.			
Storage Temperature	°C	-40 to +85			
Humidity (non condensing)	%RH	<95 maximum wet-bulb temperature: 38°C			
Cooling	-	Convection or forced air			
Altitude	m	2,000			
Withstand Voltage	Vac	500, input to output, input to case, output to case (1 minute)			
Vibration (Non operating)	-	10 to 55Hz (sweep for 15min) 1.52mm constant, 3 directions X, Y, Z each 2 hours			
Shock (Non operating)	-	980m/s^2 (100G) 6ms (6 directions, each 3 times)			
Other					
Weight (Typ)	g	3.2	4.5	5.8	10
Size (LxWxH) (Through hole)	mm	16.51 x 16.6 x 8.5	22.86 x 16.6 x 8.5	22.86 x 21.1 x 8.5	35.56 x 22.6 x 8.5
Size (LxWxH) (Through hole)	Inches	0.65 x 0.654 x 0.335	0.9 x 0.654 x 0.335	0.9 x 0.831 x 0.335	1.4 x 0.89 x 0.335
Case Material	-	Metal			
MTBF	-	See website for Reliability Data			
Warranty	yrs	5			

Notes

See website for detailed specifications, test methods and installation manual

Derating Curve

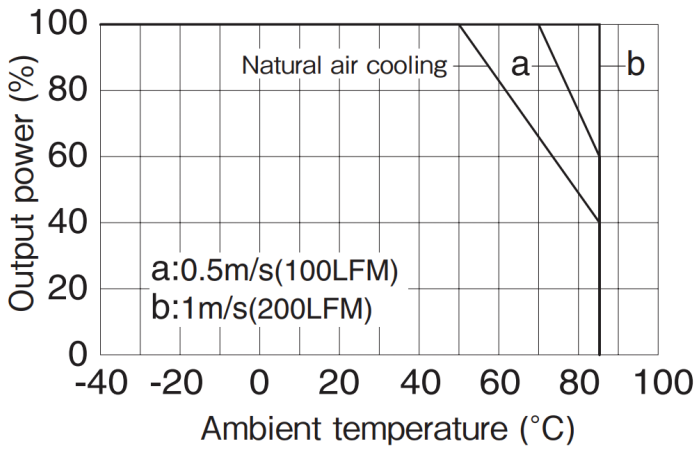

Pinouts (all models excluding SIP)

Connection diagram

CC1R5-xxxxSx-E

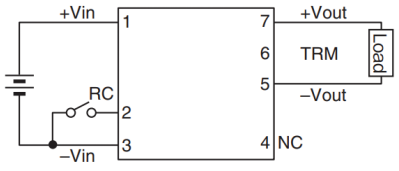

Terminal connections	
No.1	+Vin
No.2	RC
No.3	–Vin
No.4	NC
No.5	–Vout
No.6	TRM
No.7	+Vout

CC1R5-xxxxDx-E

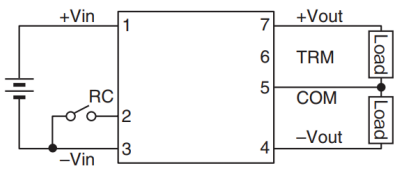

Terminal connections	
No.1	+Vin
No.2	RC
No.3	–Vin
No.4	–Vout
No.5	Common out
No.6	TRM
No.7	+Vout

Outline Drawing CC1R5 (F suffix)

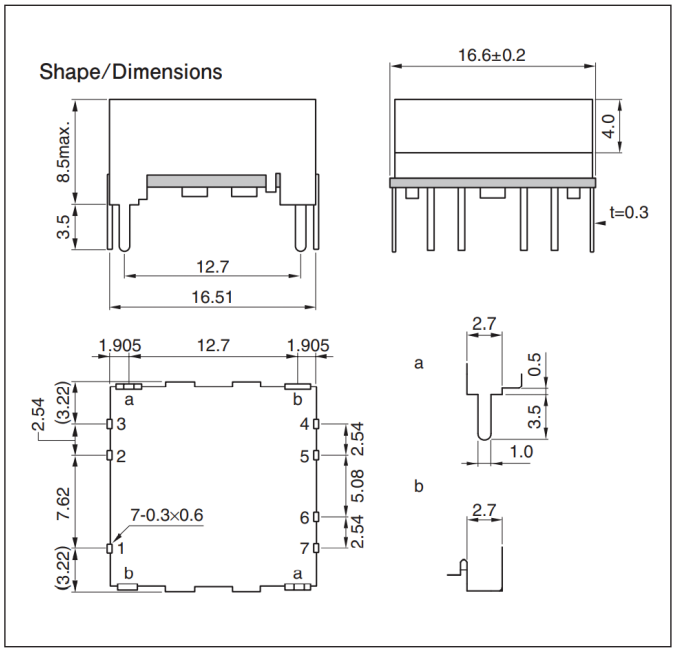

Outline Drawing CC1R5 (R suffix)

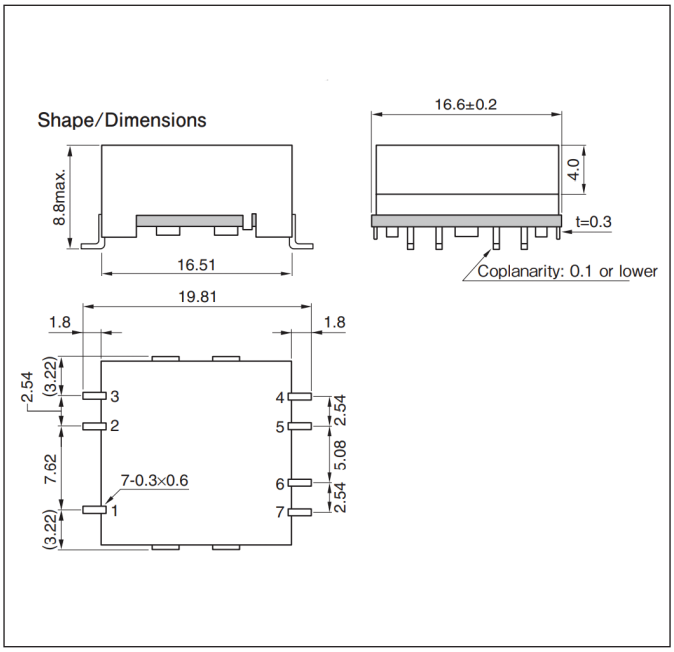

Outline Drawing CC3 (F suffix)

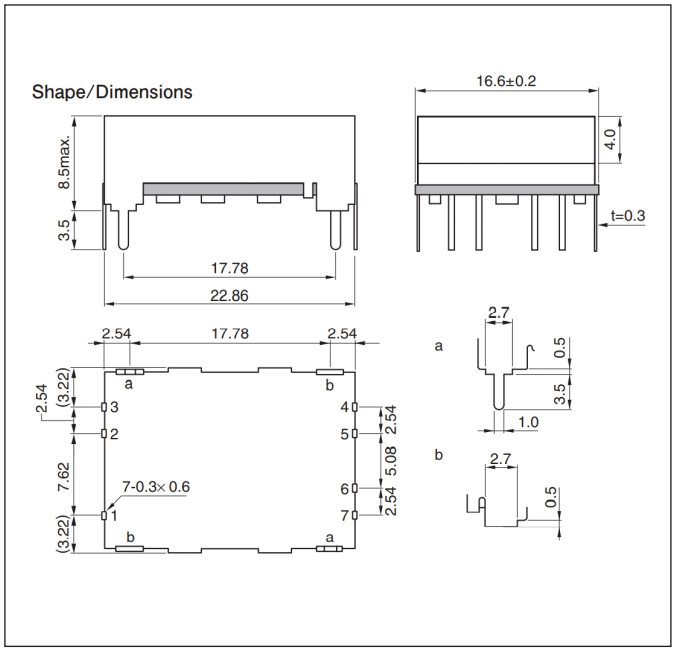

Outline Drawing CC3 (R suffix)

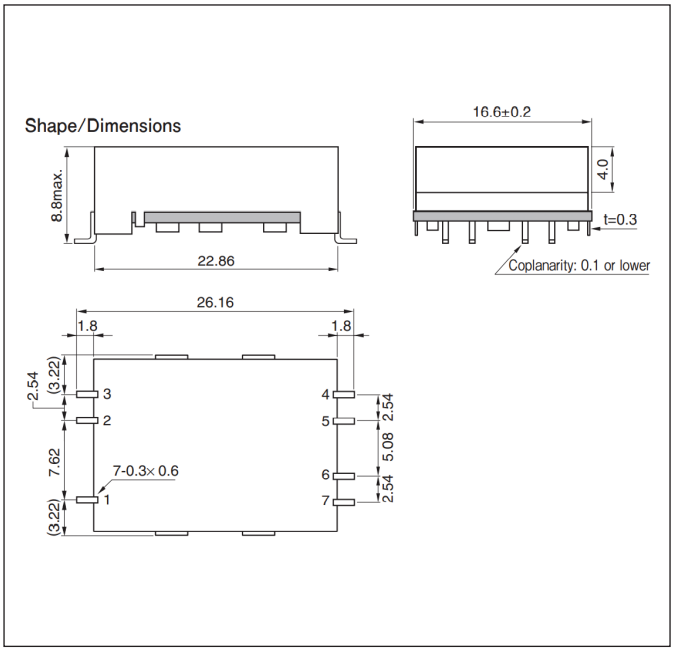

Outline Drawing CC6 (F suffix)

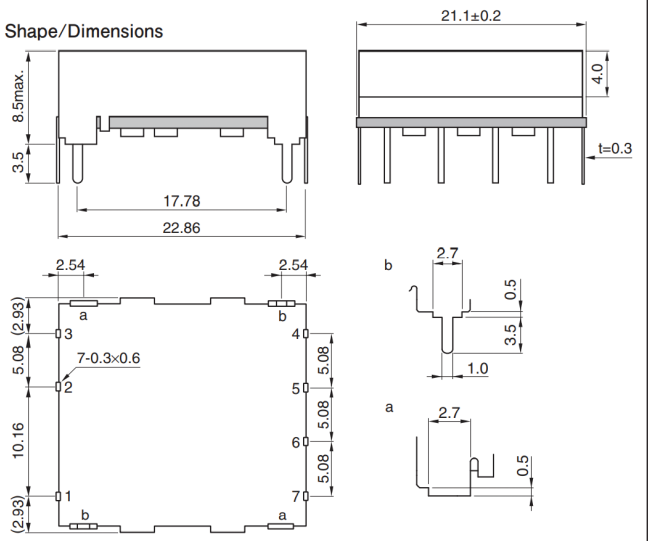

Outline Drawing CC6 (R suffix)

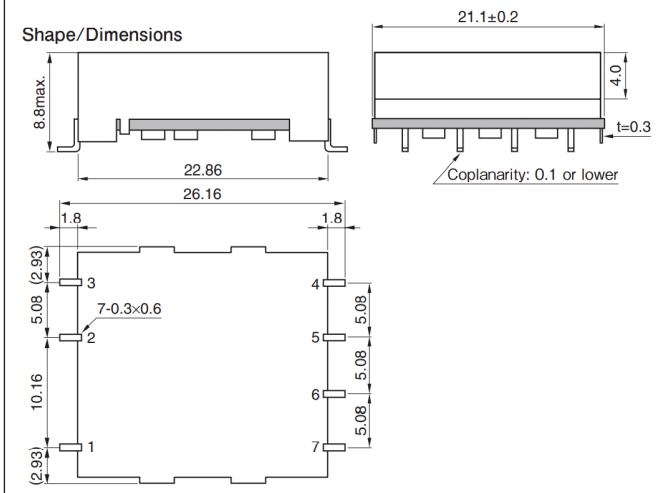

Outline Drawing CC10 (F suffix)

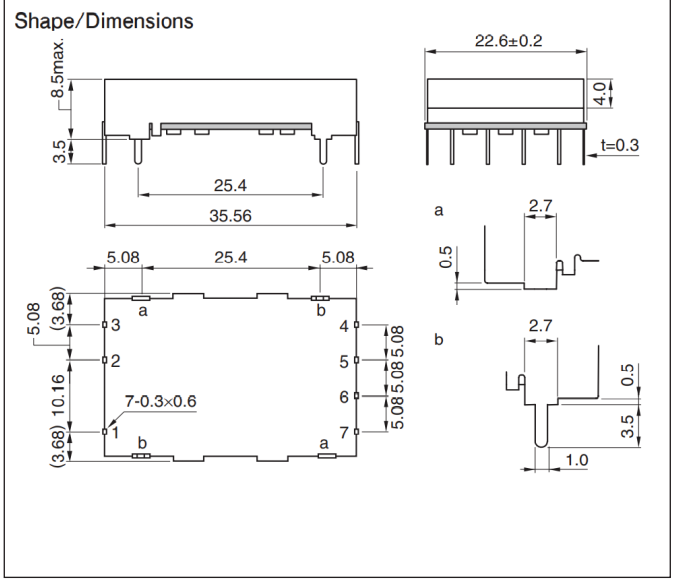

Outline Drawing CC10 (R suffix)

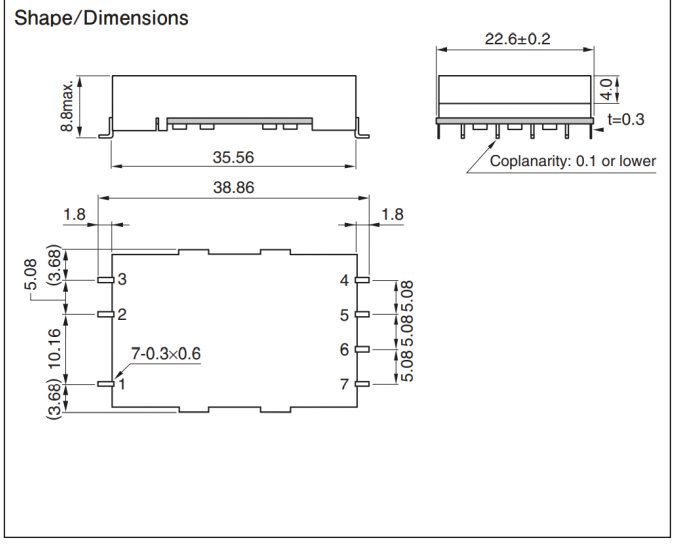



TDK-Lambda France SAS
Tel: +33 1 60 12 71 65
france@fr.tdk-lambda.com
www.emea.lambda.tdk.com/fr



Italy Sales Office
Tel: +39 02 61 29 38 63
info.italia@it.tdk-lambda.com
www.emea.lambda.tdk.com/it



Netherlands
info@nl.tdk-lambda.com
www.emea.lambda.tdk.com/nl



TDK-Lambda Germany GmbH
Tel: +49 7841 666 0
info@de.tdk-lambda.com
www.emea.lambda.tdk.com/de



Austria Sales Office
Tel: +43 2256 655 84
info@at.tdk-lambda.com
www.emea.lambda.tdk.com/at



Switzerland Sales Office
Tel: +41 44 850 53 53
info@ch.tdk-lambda.com
www.emea.lambda.tdk.com/ch



Nordic Sales Office
Tel: +45 8853 8086
info@dk.tdk-lambda.com
www.emea.lambda.tdk.com/dk



TDK-Lambda UK Ltd.
Tel: +44 (0) 12 71 85 66 66
info@uk.tdk-lambda.com
www.emea.lambda.tdk.com/uk



TDK-Lambda Ltd.
Tel: +9 723 902 4333
info@tdk-lambda.co.il
emea.lambda.tdk.com/il-en



TDK-Lambda Americas
Tel: +1 800-LAMBDA-4 or 1-800-526-2324
tla.powersolutions@tdk.com
www.us.lambda.tdk.com



TDK Electronics do Brasil Ltda
Tel: +55 11 3289-9599
sales.br@tdk-electronics.tdk.com
www.tdk-electronics.tdk.com/en



TDK-Lambda Corporation
Tel: +81-3-6778-1113
www.jp.lambda.tdk.com



TDK-Lambda (China) Electronics Co. Ltd.
Tel: +86 21 6485-0777
tlc.powersolutions@tdk.com
www.lambda.tdk.com.cn



TDK-Lambda Singapore Pte Ltd.
Tel: +65 6251 7211
tls.marketing@tdk.com
www.sg.lambda.tdk.com



TDK India Private Limited, Power Supply Division
Tel: +91 80 4039-0660
mathew.philip@tdk.com
www.sg.lambda.tdk.com

For Additional Information, please visit
https://product.tdk.com/en/power/