TDK·Lambda CC-E Series

1.5-10W, Ultra Compact Single and Dual DC-DC Converters

Features

- Compact Footprint / Low Profile
- Through Hole or SMT Versions
- 5V, 12V, 24V & 48V Inputs
- 3.3 to 30V[1] Single, ±12 to 15V Dual Outputs
- Output Voltage Adjustment
- Input - Output Isolation
- RoHS Compliant
- 5 Year Warranty
- Self contained
- Multiple Input Voltage configurations
- Open frame (no potting)



Key Market Segments & Applications

Industrial Test COMM Broadcast

Isolated RoHS

Specifications

Model					
Nominal Output Voltage	V	3.3V	5V	12/15V	±12/15 (24/30)[1]
DC Input	V	5V: 4.5-9.0V, 12V: 9-18V, 24V: 18-36V, 48V: 36-76V			
Efficiency	%	71 to 90% model dependant			
Output Voltage Tolerance	%	1.5-10W: ±3%, 15-25W: ±5%			±5%
Output Adjustment (via trim pin)	V	3.15-3.6V	4.75-6.0V	11.4-15V	22.8 - 30V
Line Regulation	mV	20		40	80
Load Regulation	mV	40		100	600[2]
Temperature Coefficient	%	<± 0.02%/°C			
Preload	-	No preload required			
Output Ripple (typ./max.BW 50MHz)	mV	40/120		30/120	
Overcurrent Protection	-	Output current limiting with automatic recovery			
Overvoltage Protection	-	No			
Remote On/ Off	-	CC1R5, 3, 6, & 10: RC terminal open, output is OFF; RC terminal to -Vin (0-0.4V), output is ON			
Operating Temp.- Convection	°C	-40 to 85°C, derates linearly to 40% load from 50°C to 85°C			
Operating Temp.- Forced Air	°C	-40°C to 85°C with 1m/s air full load			
Storage Temperature	°C	-40°C to 85°C			
Humidity (non Condensing)	-	95% RH max.(maximum wet-bulb temperature: 38°C)			
Isolation Voltage	-	500VAC 1 min. Input to output, input to case, output to case			
Isolation Resistance	-	Input to output, input to case, output to case: 50M ohm min. (500VDC)			
Shock	m/s^2	$980m/s^2$ (100G) 6ms (6 directions, each 3 times)			
Vibration (non Operating)	-	10 to 55Hz (sweep for 15min) 1.52mm constant, 3 directions X, Y, Z each 2 hours			
Safety Agency Approvals	-	IEC/EN/UL/CSA60950-1, IEC/EN/UL/CSA62368-1 and CE Mark			
Weight	g	CC1R5: 3.2, CC3: 4.5, CC6: 5.8, CC10:10.0			
Size (L x W x H) (DIP Through Hole and SMD package) (SIP Through Hole only)	in	CC1R5: 0.650 x 0.654 x 0.335; CC3: 0.900 x 0.654 x 0.335; CC6: 0.900 x 0.831 x 0.335 CC10: 1.400 x 0.890 x 0.335 CC3 (SIP): 1.09 x 0.362 x 0.705			
Warranty	yrs	5 years			

1. For 24V/30V output - connnect across +Vout & -Vout and leave “common out” pin not connected
2. Based upon equal load current from both outputs
3. For 15V output connect trim to -Vout

Model Selector

Output Voltage (V)	Output Current (A)	Output Power (W)	5V Input	12V Input	24V Input	48V Input
Single Outputs						
3.3	0.4	1.5	CC1R5-0503SF-E	CC1R5-1203SF-E	CC1R5-2403SF-E	CC1R5-4803SF-E
3.3	0.8	3	CC3-0503SF-E	CC3-1203SF-E	CC3-2403SF-E	CC3-4803SF-E
3.3	1.2	6	CC6-0503SF-E	CC6-1203SF-E	CC6-2403SF-E	CC6-4803SF-E
3.3	2.5	10	CC10-0503SF-E	CC10-1203SF-E	CC10-2403SF-E	CC10-4803SF-E
5	0.3	1.5	CC1R5-0505SF-E	CC1R5-1205SF-E	CC1R5-2405SF-E	CC1R5-4805SF-E
5	0.6	3	CC3-0505SF-E	CC3-1205SF-E	CC3-2405SF-E	CC3-4805SF-E
5	1.0	5	CC6-0505SF-E	-	-	-
5	1.2	6	-	CC6-1205SF-E	CC6-2405SF-E	CC6-4805SF-E
5	2.0	10	CC10-0505SF-E	CC10-1205SF-E	CC10-2405SF-E	CC10-4805SF-E
12(15)	0.125(0.1)	1.5	CC1R5-0512SF-E	CC1R5-1212SF-E	CC1R5-2412SF-E	CC1R5-4812SF-E
12(15)	0.25(0.2)	3	CC3-0512SF-E	CC3-1212SF-E	CC3-2412SF-E	CC3-4812SF-E
12(15)	0.5(0.4)	6	CC6-0512SF-E	CC6-1212SF-E	CC6-2412SF-E	CC6-4812SF-E
12(15)	0.8(0.64)	10	CC10-0512SF-E	-	-	-
12(15)	1.0(0.8)	10	-	CC10-1212SF-E	CC10-2412SF-E	CC10-4812SF-E
Dual Outputs						
±12 (15)[3]	0.06(0.05)	1.5	CC1R5-0512DF-E	CC1R5-1212DF-E	CC1R5-2412DF-E	CC1R5-4812DF-E
±12 (15)[3]	0.125(0.1)	3	CC3-0512DF-E	CC3-1212DF-E	CC3-2412DF-E	CC3-4812DF-E
±12 (15)[3]	0.25(0.2)	6	CC6-0512DF-E	CC6-1212DF-E	CC6-2412DF-E	CC6-4812DF-E
±12 (15)[3]	0.4(0.32)	10	CC10-0512DF-E	-	-	-
±12 (15)[3]	0.45(0.36)	10	-	CC10-1212DF-E	CC10-2412DF-E	CC10-4812DF-E

Outline Drawing

CC10-F-E (DIP TYPE)

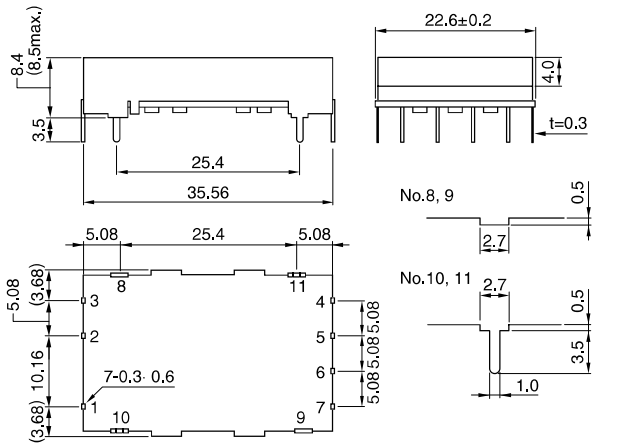

Outline Drawing

CC10- R-E (SMD TYPE)

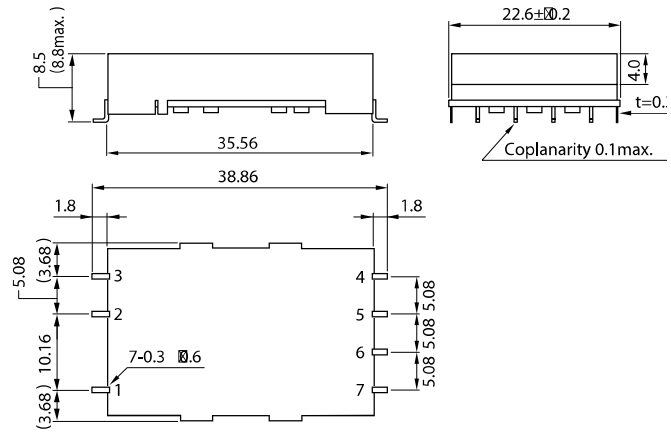

Options

Version	Description
F-E	Through hole mounting (DIP pkg)
R-E	Surface mount (DIP pkg)
S-E	Through hole mounting (SIP pkg - CC3)

Pinout (CC1R5, 3, 6, and 10)

Pin	Single	Dual
1	+Vin	+Vin
2	RC	RC
3	-Vin	-Vin
4	NC	-Vout
5	-Vout	Common out
6	TRM	TRM
7	+Vout	+Vout

For Additional Information, please visit
https://product.tdk.com/en/power/