https://product.tdk.com/en/power/ccg
www.emea.lambda.tdk.com/ccg

1.3 to 10.8W DC-DC Converters



Industrial Test COMM Broadcast

The space saving CCG1R5 to CCG10 series of isolated DC-DC converters operate from wide range 4.5 to 18V, 9 to 36Vdc or 18 to 76V inputs with 1.3W to 10.8W power levels and output voltages from 3.3V to 30V (1). Single output models can be adjusted -5% to +10% by using the trim terminal. The CCG can operate in ambient temperatures of up to -40 to +100°C (model dependent) and have an input to output isolation of 1,500Vdc. The CCG series is available in through-hole or surface mount packages, with an option for a double sided board coating for rail applications and other harsh environments.

Features	Benefits
• Wide 4:1 Input Ranges	• Supports Dual 5/12V 12/24V or 24/48V System Voltages
• Space Saving Package Sizes	• Less Board Area Needed
• Certified to IEC62368-1	• Easier System Compliance
• Reduced Derating at High Ambient Temperatures	• More Useable Power
• No Silicone Potting	• Reduced Quality Risk During Surface Mount Reflow Process

Part Numbering Scheme

CCG	1R5	-12	-03	S	F	C	TR
Series Name CCG	Output Power 1R5 = 1.5W 3 = 3W 6 = 6W 10 = 10W	Input Voltage 12 = 4.5 - 18V 24 = 9 - 36V 48 = 18 - 76V	Output Voltage 03 = 3.3V 05 = 5V 12 = 12V 15 = 15V	Output S = Single D = Dual	Mounting Type F = Through hole R = Surface Mount	Board Coating Blank = No coating C = Coating	Tray Packaging Blank = 1 to 20 units TR = 40 units*

* Order multiples of 40, Surface Mount models only

Related Products

Type	Part Number	Description
Isolated DC-DC Converter	CCG15-30	15-30W, 9 up to 76Vin, Single or Dual Output, 1x1 inch
Evaluation Kit	CCG-EVK-D0	Evaluation board (no module) for CCG15 or CCG30
Isolated DC-DC Converter	PXD40	40W, 9-36 or 18-75Vin, Single or Dual Outputs, 2x1 inch
DC-DC Non-isolated Buck Converter	i3A	100W, 9-53Vin, Output 5-30V 4.5A; 3.3-16.5V 8A, 1/32nd brick
DC-DC Non-isolated Buck Converter	i6A4W	250W, 9-53Vin, Output 3.3-40V 10A; 3.3-15V 20A, 16th brick
DC-DC Non-isolated Buck Converter	i7A	400-750W, 9 up to 60Vin, 0.8 up to 24Vout, 33A, 45A, 60A, 16th brick pinout
Ruggedized DC-DC Buck-Boost Converter	RGC	300W, 9-53Vin, Output 9.6-48V 8A; 5-28V 12.5A, 16th brick pinout
Isolated DC-DC Converter	PYD20	20W, 8.5-160Vin, Single or Dual Outputs, 2x1 inch
Isolated DC-DC Converter	PYQ50	30-50W, 14-160Vin, Single Output, Quarter brick

Model Selector

Model Letter “”x”” indicates mounting type x=F through hole, x=R surface mount	Input Voltage (V)	Output Voltage (V)	Output Current (A)	Maximum Power (W)	Input Current at nominal input (A)	Efficiency (%) (100% load, nominal input)	Line / Load Regulation (mV)
CCG1R5-12-03Sx		3.3	0.4	1.32	0.149	74	20 / 20
CCG3-12-03Sx		3.3	0.8	2.64	0.282	78	20 / 20
CCG6-12-03Sx		3.3	1.6	5.28	0.537	82	20 / 20
CCG10-12-03Sx		3.3	2.6	8.58	0.813	88	20 / 20
CCG1R5-12-05Sx		5	0.3	1.5	0.158	79	20 / 20
CCG3-12-05Sx		5	0.6	3	0.309	81	20 / 20
CCG6-12-05Sx		5	1.2	6	0.581	86	20 / 20
CCG10-12-05Sx		5	2	10	0.926	90	20 / 20
CCG1R5-12-12Sx		12	0.13	1.56	0.165	79	48 / 48
CCG3-12-12Sx		12	0.25	3	0.301	83	48 / 48
CCG6-12-12Sx		12	0.5	6	0.562	89	48 / 48
CCG10-12-12Sx		12	0.9	10.8	1.000	90	48 / 48
CCG1R5-12-15Sx		15	0.1	1.5	0.158	79	60 / 60
CCG3-12-15Sx		15	0.2	3	0.294	85	60 / 60
CCG6-12-15Sx		15	0.4	6	0.556	90	60 / 60
CCG10-12-15Sx		15	0.7	10.5	0.972	90	60 / 60
CCG1R5-12-12Dx (1)	4.5 - 18	24	0.065	1.56	0.167	78	60 / 120
CCG3-12-12Dx (1)		24	0.13	3.12	0.31	84	60 / 120
CCG6-12-12Dx (1)		24	0.25	6	0.568	88	60 / 120
CCG10-12-12Dx (1)		24	0.42	10.08	0.944	89	60 / 120
CCG1R5-12-15Dx (1)		30	0.05	1.5	0.16	78	75 / 150
CCG3-12-15Dx (1)		30	0.1	3	0.298	84	75 / 150
CCG6-12-15Dx (1)		30	0.2	6	0.568	88	75 / 150
CCG10-12-15Dx (1)		30	0.34	10.2	0.944	90	75 / 150
CCG1R5-12-12Dx		±12	±0.065	1.56	0.167	78	60 / 120
CCG3-12-12Dx		±12	±0.13	3.12	0.31	84	60 / 120
CCG6-12-12Dx		±12	±0.25	6	0.568	88	60 / 120
CCG10-12-12Dx		±12	±0.42	10.08	0.944	89	60 / 120
CCG1R5-12-15Dx		±15	±0.05	1.5	0.16	78	75 / 150
CCG3-12-15Dx		±15	±0.1	3	0.298	84	75 / 150
CCG6-12-15Dx		±15	±0.2	6	0.568	88	75 / 150
CCG10-12-15Dx		±15	±0.34	10.2	0.944	90	75 / 150
CCG1R5-24-03Sx		3.3	0.4	1.32	0.075	73	20 / 20
CCG3-24-03Sx		3.3	0.8	2.64	0.143	77	20 / 20
CCG6-24-03Sx		3.3	1.6	5.28	0.272	81	20 / 20
CCG10-24-03Sx		3.3	2.6	8.58	0.411	87	20 / 20
CCG1R5-24-05Sx		5	0.3	1.5	0.08	78	20 / 20
CCG3-24-05Sx		5	0.6	3	0.152	82	20 / 20
CCG6-24-05Sx		5	1.2	6	0.294	85	20 / 20
CCG10-24-05Sx	9 - 36	5	2	10	0.468	89	20 / 20
CCG1R5-24-12Sx		12	0.13	1.56	0.079	82	48 / 48
CCG3-24-12Sx		12	0.25	3	0.151	83	48 / 48
CCG6-24-12Sx		12	0.5	6	0.284	88	48 / 48
CCG10-24-12Sx		12	0.9	10.8	0.5	90	48 / 48
CCG1R5-24-15Sx		15	0.1	1.5	0.076	82	60 / 60
CCG3-24-15Sx		15	0.2	3	0.149	84	60 / 60
CCG6-24-15Sx		15	0.4	6	0.281	89	60 / 60
CCG10-24-15Sx		15	0.7	10.5	0.486	90	60 / 60

Notes

(1) ±12V dual output models can provide a 24V single output by utilizing just the +Vout and -Vout pins, leaving the COM unconnected. Similarly ±15V dual output models can be used as a 30V single output

Model Selector

Model Letter “”x”” indicates mounting type x=F through hole, x=R surface mount	Input Voltage (V)	Output Voltage (V)	Output Current (A)	Maximum Power (W)	Input Current at nominal input (A)	Efficiency (%) (100% load, nominal input)	Line / Load Regulation (mV)
CCG1R5-24-12Dx (1)	9 - 36	24	0.065	1.56	0.08	81	60 / 120
CCG3-24-12Dx (1)		24	0.13	3.12	0.157	83	60 / 120
CCG6-24-12Dx (1)		24	0.25	6	0.284	88	60 / 120
CCG10-24-12Dx (1)		24	0.42	10.08	0.472	89	60 / 120
CCG1R5-24-15Dx (1)		30	0.05	1.5	0.078	80	75 / 150
CCG3-24-15Dx (1)		30	0.1	3	0.152	82	75 / 150
CCG6-24-15Dx (1)		30	0.2	6	0.284	88	75 / 150
CCG10-24-15Dx (1)		30	0.34	10.2	0.472	90	75 / 150
CCG1R5-24-12Dx		±12	±0.065	1.56	0.08	81	60 / 120
CCG3-24-12Dx		±12	±0.13	3.12	0.159	83	60 / 120
CCG6-24-12Dx		±12	±0.25	6	0.284	88	60 / 120
CCG10-24-12Dx		±12	±0.42	10.08	0.472	89	60 / 120
CCG1R5-24-15Dx		±15	±0.05	1.5	0.078	80	75 / 150
CCG3-24-15Dx		±15	±0.1	3	0.152	82	75 / 150
CCG6-24-15Dx		±15	±0.2	6	0.284	88	75 / 150
CCG10-24-15Dx		±15	±0.34	10.2	0.472	90	75 / 150
CCG1R5-48-03Sx	18 - 76	3.3	0.4	1.32	0.038	72	20 / 20
CCG3-48-03Sx		3.3	0.8	2.64	0.071	77	20 / 20
CCG6-48-03Sx		3.3	1.6	5.28	0.136	81	20 / 20
CCG10-48-03Sx		3.3	2.6	8.58	0.205	87	20 / 20
CCG1R5-48-05Sx		5	0.3	1.5	0.041	76	20 / 20
CCG3-48-05Sx		5	0.6	3	0.078	80	20 / 20
CCG6-48-05Sx		5	1.2	6	0.149	84	20 / 20
CCG10-48-05Sx		5	2	10	0.234	89	20 / 20
CCG1R5-48-12Sx		12	0.13	1.56	0.041	79	48 / 48
CCG3-48-12Sx		12	0.25	3	0.076	82	48 / 48
CCG6-48-12Sx		12	0.5	6	0.144	87	48 / 48
CCG10-48-12Sx		12	0.9	10.8	0.25	90	48 / 48
CCG1R5-48-15Sx		15	0.1	1.5	0.041	77	60 / 60
CCG3-48-15Sx		15	0.2	3	0.075	83	60 / 60
CCG6-48-15Sx		15	0.4	6	0.142	88	60 / 60
CCG10-48-15Sx		15	0.7	10.5	0.243	90	60 / 60
CCG1R5-48-12Dx (1)		24	0.065	1.56	0.042	78	60 / 120
CCG3-48-12Dx (1)		24	0.13	3.12	0.078	83	60 / 120
CCG6-48-12Dx (1)		24	0.25	6	0.144	87	60 / 120
CCG10-48-12Dx (1)		24	0.42	10.08	0.239	88	60 / 120
CCG1R5-48-15Dx (1)		30	0.05	1.5	0.041	76	75 / 150
CCG3-48-15Dx (1)		30	0.1	3	0.075	83	75 / 150
CCG6-48-15Dx (1)		30	0.2	6	0.144	87	75 / 150
CCG10-48-15Dx (1)		30	0.34	10.2	0.239	89	75 / 150
CCG1R5-48-12Dx		±12	±0.065	1.56	0.042	78	60 / 120
CCG3-48-12Dx		±12	±0.13	3.12	0.078	83	60 / 120
CCG6-48-12Dx		±12	±0.25	6	0.144	87	60 / 120
CCG10-48-12Dx		±12	±0.42	10.08	0.239	88	60 / 120
CCG1R5-48-15Dx		±15	±0.05	1.5	0.041	76	75 / 150
CCG3-48-15Dx		±15	±0.1	3	0.075	83	75 / 150
CCG6-48-15Dx		±15	±0.2	6	0.144	87	75 / 150
CCG10-48-15Dx		±15	±0.34	10.2	0.239	89	75 / 150

Notes

(1) ±12V dual output models can provide a 24V single output by utilizing just the +Vout and -Vout pins, leaving the COM unconnected. Similarly +/-15V dual output models can be used as a 30V single output

Specifications

Model		CCG1R5-10, CCG3
Input		
Input Voltage Range	Vdc	See model selector table
No Load Power Consumption (2)	W	0.15 to 0.75. See evaluation data on website.
Efficiency	-	See model selector table
Conducted & Radiated EMI	-	EN55011/EN55032-A, FCC Class A, VCCI-A (External components are required, consult Evaluation Data on website)(3)
Immunity	-	See Immunity table
Safety Certifications and Markings	-	IEC/UL/CSA/EN62368-1, CE Mark and UKCA Mark

Immunity

Test	Standard	Test Level	Criteria	Notes: See IEC61000 immunity test reports on website for external filtering circuitry(3)
ESD	EN61000-4-2	3	B	Air ± 8kV
Radiated Susceptibility	EN61000-4-3	2/3	A	Lvl 2: 3V/m(1.4-6.0GHz) Lvl 3: 10V/m(80-1000MHz)
Electrical Fast Transient Burst	EN61000-4-4	4	B	± 4kV for input and output
Surge	EN61000-4-5	3	B	Normal mode ± 2kV
Conducted Susceptibility	EN61000-4-6	3	A	10V(150kHz-80MHz)
Magnetic Fields	EN61000-4-8	4	A	30A/m(50Hz, 60Hz)

Specifications

Model		CCG1R5	CCG3	CCG6	CCG10
Output					
Output Voltage Tolerance	%	±2			
Output Voltage Adjustment	%	Single output only. -5, +10			
Switching Frequency	kHz	400 (fixed)			
Cross Regulation	mV	Dual output only. ±12V: 480, ±15V: 600 (Asymmetrical, one output at 20%, the other at 100%			
External Load Capacitance (Maximum)	uF	CCG1R5, CCG3: 3.3-5V: 220, 12-15V: 100 CCG1R5, CCG3: ±12-15V: ±100, 24-30V: 47		CCG6, CCG10: 3.3-5V: 470, 12-15V: 220 CCG6, CCG10: ±12-15V: ±220, 24-30V: 100	
Ripple & Noise	mV	200			
Temperature Coefficient	%/°C	0.02			
Minimum Load	-	No minimum load required			
Overcurrent Protection	%	Hiccup mode. >105%			
Overvoltage Protection	-	-			
Overtemperature Protection	-	-			
Remote Sense	-	No remote sense			
Remote On/Off	-	Negative Logic ON: Short , OFF: Open			
Parallel Operation	-	Not possible			
Environmental					
Operating Temperature (Ambient) (3)	°C	-40 to +100		-40 to +95	-40 to +90
Maximum Transformer Temperature	°C	112 to 130 (See instruction manual on website for limits and measurement)			
Storage Temperature	°C	-55 to +125			
Humidity (non condensing)	%RH	5 - 95 (Operating & storage)			
Cooling	-	Convection or forced air			
Altitude	m	5,000			
Withstand Voltage	Vac/Vdc	Input to output 1,500Vdc or 1,000Vac for 1 minute			
Vibration (Non operating)	-	10-55Hz (Sweep for 1min.) Amplitude 1.65 mm Constant (Maximum 98m/s2) X,Y,Z 1 hour each			
Shock (Non operating)	-	490.3m/s^2, 11ms, ±X, ±Y, ±Z 3 times each			

Specifications

Model		CCG1R5	CCG3	CCG6	CCG10
Other					
Weight (Typ)	g	3		4	
Size (LxWxH)	mm	15.7 x 10.4 x 11.8		19 x 12.4 x 11.5 (11.8 for SMD version)	
Size (LxWxH)	Inches	0.62 x 0.41 x 0.46		0.75 x 0.49 x 0.45 (0.46 for SMD version)	
Case Material	-	Non-conductive black plastic			
MTBF - Telcordia SR-332 issue 3[3]	Hours	4,000,000 to 11,883,918, 40°C full load. See reliability data on the website			
Warranty	yrs	5			

Notes
(2) Off-load power consumption can be reduced to typically <0.1W using the remote on/off function - See evaluation data and installation manual.
(3) See website for derating, detailed specifications, test methods and installation manual

CCG1R5 Output Current vs. Ambient Temperature (*)

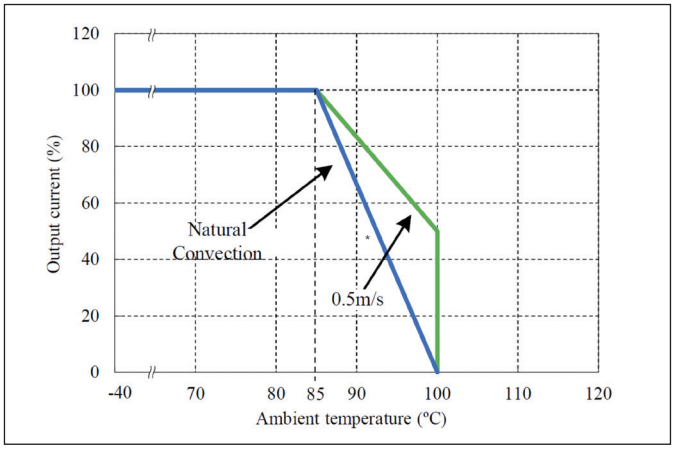

CCG3 Output Current vs. Ambient Temperature (*)

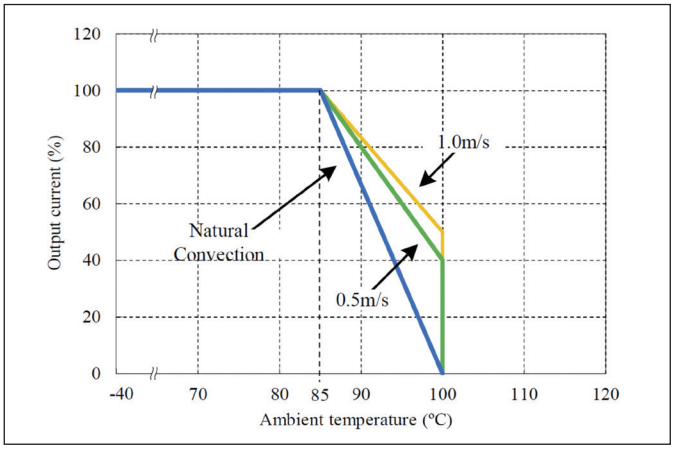

(*) Derating varies by model number, see Instruction Manual on the Tech Notes webpage[3]

CCG6 Output Current vs. Ambient Temperature (*)

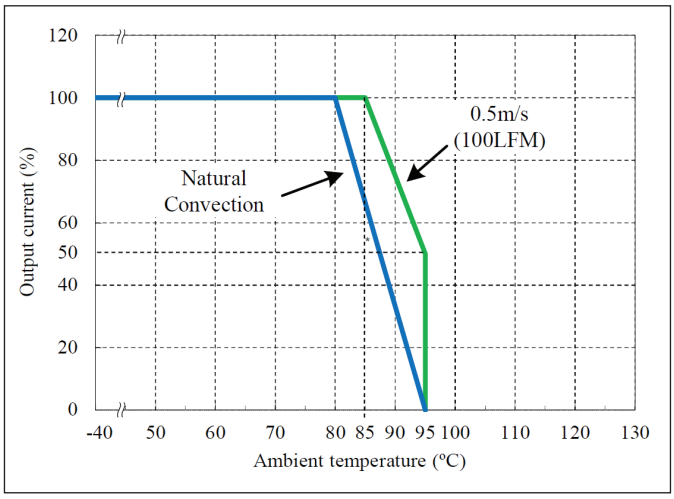

CCG10 Output Current vs. Ambient Temperature (*)

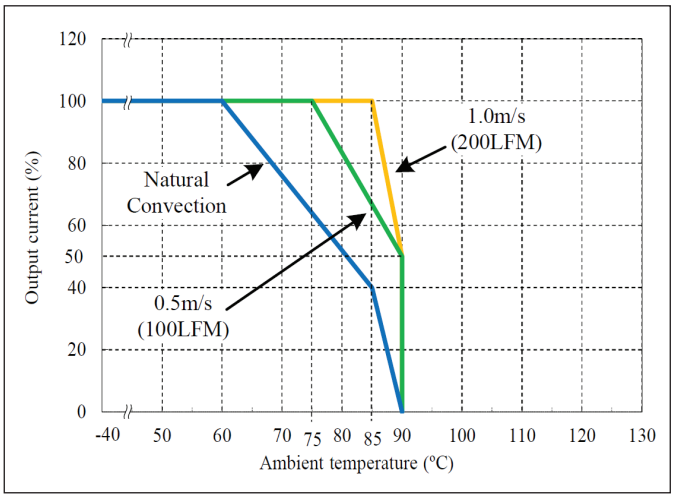

Outline Drawing Single Output CCG1R5 and CCG3 Through Hole (F suffix)

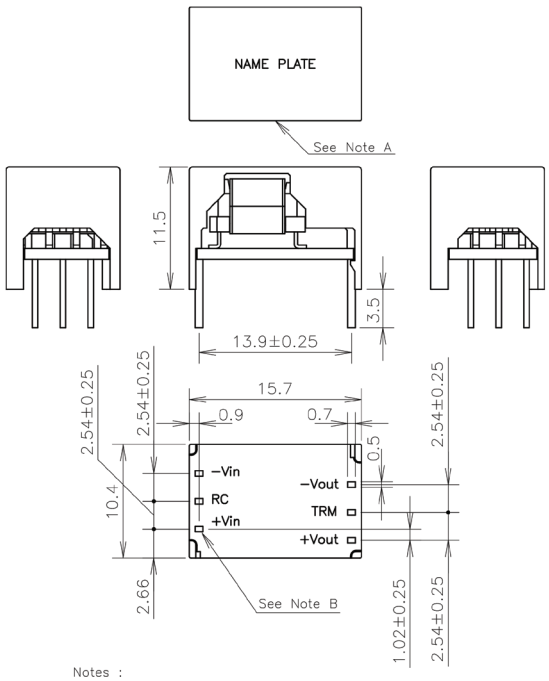

Notes :

A: Model name, country of manufacture, Lot No., Serial No. and safety marking (For only approved products) are shown here.

B: Input, Output and signal terminals : 6–0.7x0.5±0.05

C: Unless otherwise specified dimensional tolerance : ±0.5

Unit mm

Outline Drawing Single Output CCG1R5 and CCG3 Surface Mount (R suffix)

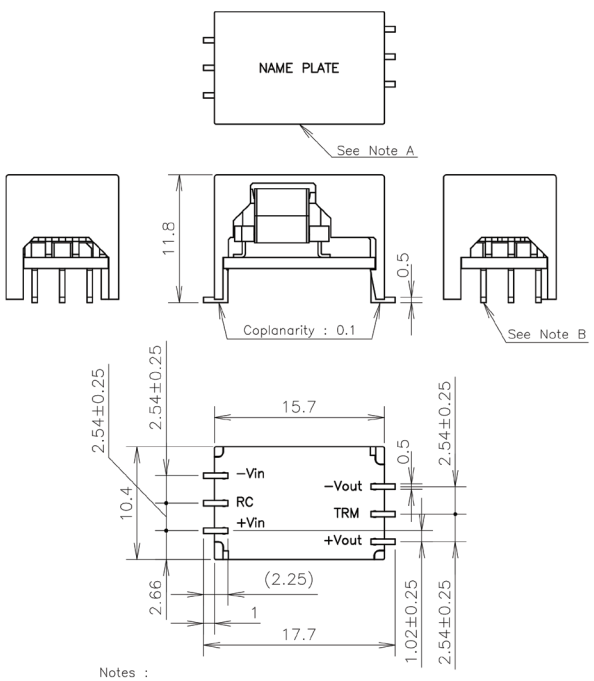

Notes :

A: Model name, country of manufacture, Lot No., Serial No. and safety marking (For only approved products) are shown here.

B: Input, Output and signal terminals : 6–0.5x0.5±0.05

C: Unless otherwise specified dimensional tolerance : ±0.5

Unit mm

Outline Drawing Dual Output CCG1R5 and CCG3 Through Hole (F suffix)

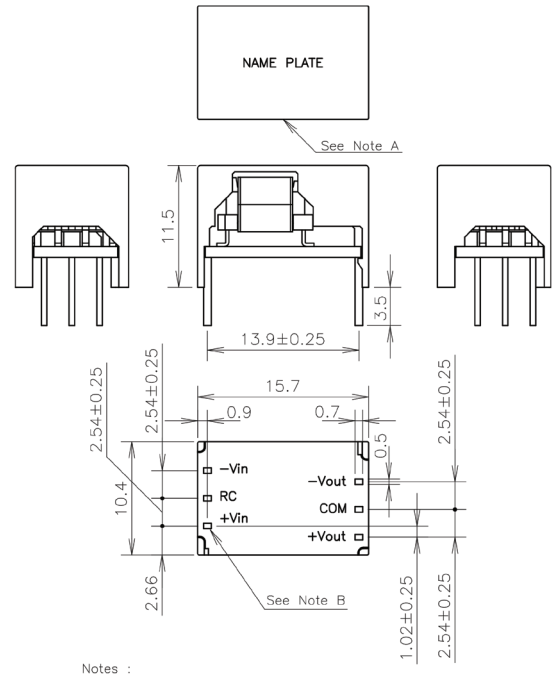

Notes :

A: Model name, country of manufacture, Lot No., Serial No. and safety marking (For only approved products) are shown here.

B: Input, Output and signal terminals : 6–0.7x0.5±0.05

C: Unless otherwise specified dimensional tolerance : ±0.5

Unit mm

Outline Drawing Dual Output CCG1R5 and CCG3 Surface Mount (R suffix)

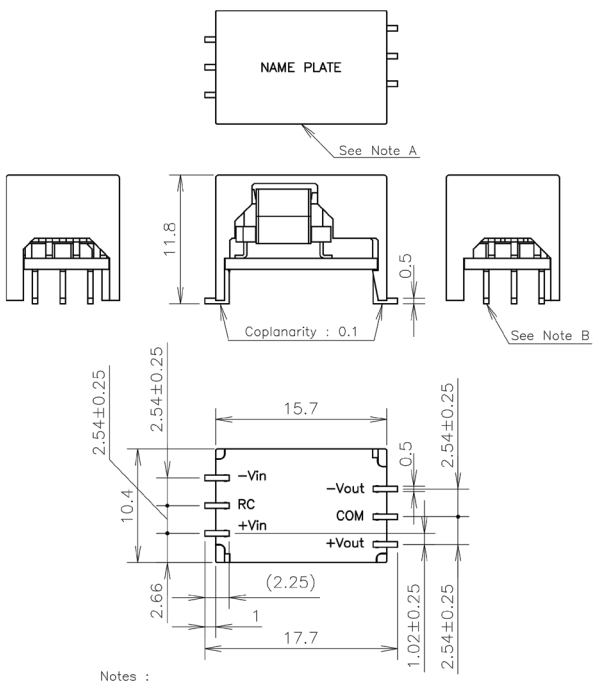

Notes :

A: Model name, country of manufacture, Lot No., Serial No. and safety marking (For only approved products) are shown here.

B: Input, Output and signal terminals : 6–0.5x0.5±0.05

C: Unless otherwise specified dimensional tolerance : ±0.5

Unit mm

Outline Drawing Single Output CCG6 and CCG10 Through Hole (F suffix)

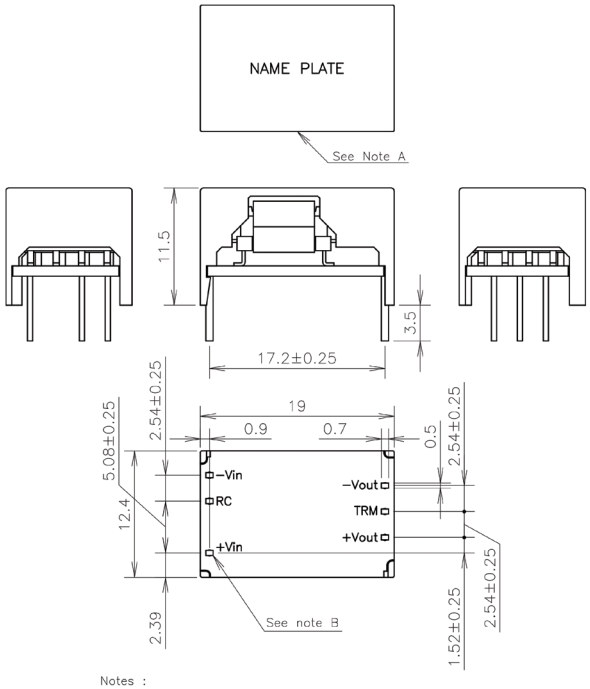

Notes :

A: Model name, country of manufacture, Lot No., Serial No. and safety marking (For only approved products) are shown here.

B: Input, Output and signal terminals : 6–0.7x0.5±0.05

C: Unless otherwise specified dimensional tolerance : ±0.5

Unit mm

Outline Drawing Single Output CCG6 and CCG10 Surface Mount (R suffix)

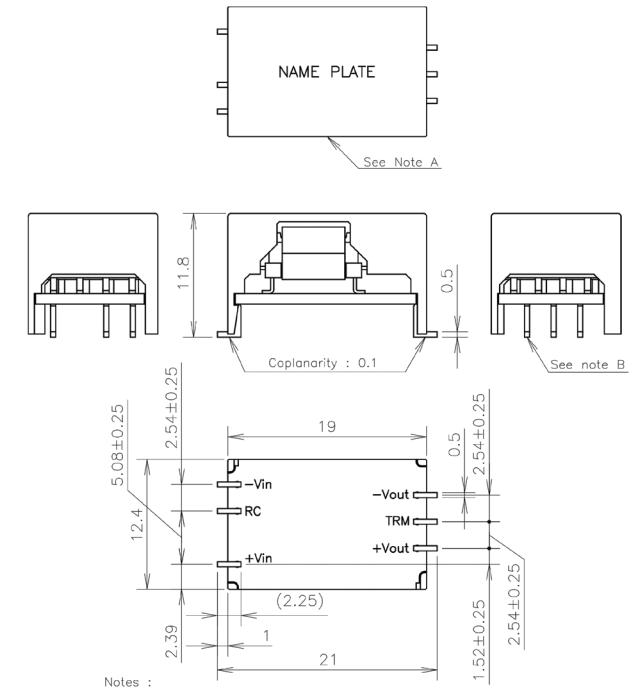

Notes :

A: Model name, country of manufacture, Lot No., Serial No. and safety marking (For only approved products) are shown here.

B: Input, Output and signal terminals : 6–0.5x0.5±0.05

C: Unless otherwise specified dimensional tolerance : ±0.5

Unit mm

Outline Drawing Dual Output CCG6 and CCG10 Through Hole (F suffix)

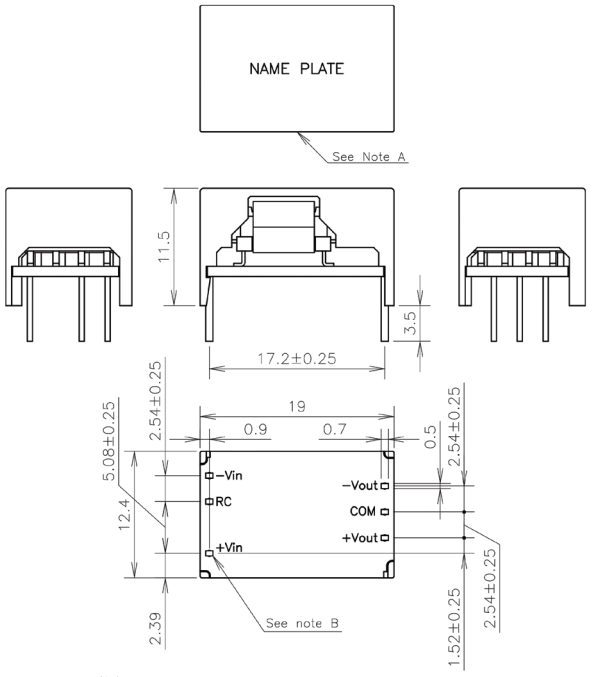

Notes :

A: Model name, country of manufacture, Lot No., Serial No. and safety marking (For only approved products) are shown here.

B: Input, Output and signal terminals : 6–0.7x0.5±0.05

C: Unless otherwise specified dimensional tolerance : ±0.5

Unit mm

Outline Drawing Dual Output CCG6 and CCG10 Surface Mount (R suffix)

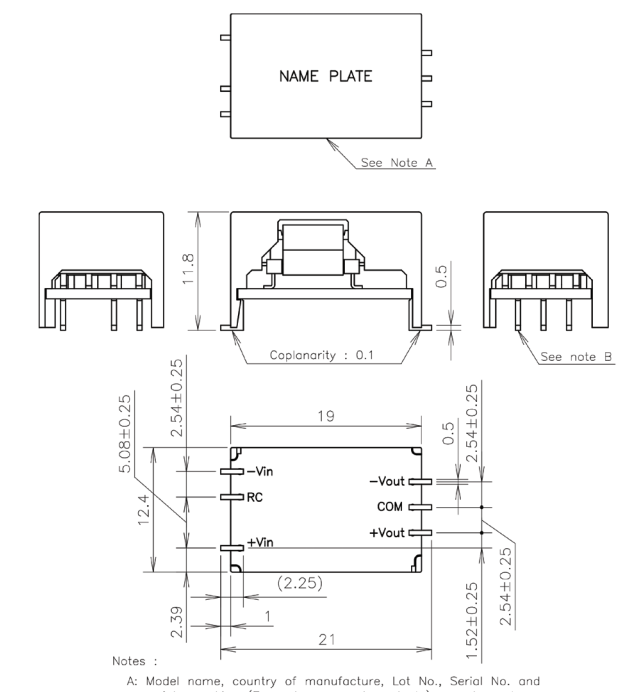

Notes :

A: Model name, country of manufacture, Lot No., Serial No. and safety marking (For only approved products) are shown here.

B: Input, Output and signal terminals : 6–0.5x0.5±0.05

C: Unless otherwise specified dimensional tolerance : ±0.5

Unit mm



TDK-Lambda France SAS
Tel: +33 1 60 12 71 65
tlf.fr-powersolutions@tdk.com
www.emea.lambda.tdk.com/fr



Italy Sales Office
Tel: +39 02 61 29 38 63
tlf.it-powersolutions@tdk.com
www.emea.lambda.tdk.com/it



Netherlands
tlf.nl-powersolutions@tdk.com
www.emea.lambda.tdk.com/nl



TDK-Lambda Germany GmbH
Tel: +49 7841 666 0
tlg.powersolutions@tdk.com
www.emea.lambda.tdk.com/de



Austria Sales Office
Tel: +43 2256 655 84
tlg.at-powersolutions@tdk.com
www.emea.lambda.tdk.com/at



Switzerland Sales Office
Tel: +41 44 850 53 53
tlg.ch-powersolutions@tdk.com
www.emea.lambda.tdk.com/ch



Nordic Sales Office
Tel: +45 8853 8086
tlg.dk-powersolutions@tdk.com
www.emea.lambda.tdk.com/dk



TDK-Lambda UK Ltd.
Tel: +44 (0) 12 71 85 66 66
tlu.powersolutions@tdk.com
www.emea.lambda.tdk.com/uk



TDK-Lambda Ltd.
Tel: +9 723 902 4333
tli.powersolutions@tdk.com
www.emea.lambda.tdk.com/il-en



TDK-Lambda Americas
Tel: +1 800-LAMBDA-4 or 1-800-526-2324
tla.powersolutions@tdk.com
www.us.lambda.tdk.com



TDK Electronics do Brasil Ltda
Tel: +55 11 3289-9599
sales.br@tdk-electronics.tdk.com
www.tdk-electronics.tdk.com/en



TDK-Lambda Corporation
Tel: +81-3-6778-1113
www.jp.lambda.tdk.com



TDK-Lambda (China) Electronics Co. Ltd.
Tel: +86 21 6485-0777
tlc.powersolutions@tdk.com
www.lambda.tdk.com.cn



TDK-Lambda Singapore Pte Ltd.
Tel: +65 6251 7211
tls.marketing@tdk.com
www.sg.lambda.tdk.com



TDK India Private Limited, Power Supply Division
Tel: +91 80 4039-0660
mathew.philip@tdk.com
www.sg.lambda.tdk.com

For Additional Information, please visit
https://product.tdk.com/en/power/