30-200W, 60 to 160VDC Input DC-DC Converters

Features

- 60 - 160VDC Input
- IEC 61373 Shock and Vibration
- Base plate Cooled
- Full Power at 100°C base plate
- Parallel Operation (200W Only)
- Small Size
- Quarter / Half Brick Footprint
- Full Power from -40 to +100°C
- Parallel Function (CN200)



Key Market Segments & Applications

Industrial Railroad Isolated RoHS

Specifications

Model					
Nominal Output Voltage	VDC	5V	12V	15V	24V
Input Voltage Range	VDC	60 - 160VDC			
Input Current	A	0.34 - 2.16A (model dependant)			
Output Voltage Adjustment	VDC	4.5 - 6	10.8 - 13.2	13.5 - 16.5	21.6 - 26.4
Ripple & Noise (max) pk-pk	mV	100	150	150	240
Line Regulation (max)	mV	20	48	60	96
Load Regulation (max)	mV	40	96	120	192
Overcurrent Protection	%	105 - 140%			
Overvoltage Protection	%	125 - 145% (Cycle input or remote on/off to reset)			
Remote Sense	-	Yes			
Remote On/Off	-	Yes; Low = ON, Open = OFF			
Parallel Operation	-	CN200A 12V, 15V & 24V only			
Operating Temperature	°C	-40°C to +100°C Baseplate			
Storage Temperature	°C	-40°C to +100°C			
Temperature Coefficient	%/°C	0.02%/°C			
Humidity (non condensing)	%RH	5 - 95% RH Operating and Non Operating			
Cooling	-	Conduction (See Installation Manual for heatsink selection)			
Withstand Voltage	VAC	Input to Baseplate: 1.5kVAC; Input to Output 3.0kVAC for I min.; Output to Baseplate: 500VAC for 1 min			
Isolation Resistance	-	>100M at 25°C and 70%RH, Output to Base plate 500VDC			
Vibration	-	Non Operating, 10-55Hz (sweep for 1 min.) Amplitude 0.825mm constant (Max 49 m/s^2) X,Y,Z 1 hour each IEC61373 - Category 1, Grade B			
Shock	-	196.1m/s^2, IEC61373 - Category 1, Grade B			
Safety Agency Certifications	-	UL60950-1, CSA60950-1, EN60950-1, CE LVD			
Weight (Typ)	g	CN30A-100A: 70g, CN200A 150g			
Size (WxHxD)	in	CN30A-100A: 1.45 x 0.5 x 2.28", CN200A: 2.4 x 0.5 x 2.28"			
Warranty	yrs	5 Years			

Note: See Installation Manual for full details, test methods of parameters and application notes

Model Selector

Model	Voltage (V)	Output Current (A)	Maximum Power (W)	Input Current (A)	Efficiency (%) (100% load, 110VDC In)
CN30A110-5	5	6	30	0.34	83
CN50A110-5	5	10	50	0.55	84
CN100A110-5	5	20	100	1.08	85
CN200A110-5	5	40	200	2.16	85
CN30A110-12	12	2.5	30	0.34	84
CN50A110-12	12	4.2	50.4	0.55	86
CN100A110-12	12	8.4	100.8	1.05	88
CN200A110-12	12	16.7	200.4	2.09	88
CN30A110-15	15	2	30	0.34	84
CN50A110-15	15	3.4	51	0.55	86
CN100A110-15	15	6.7	100.5	1.05	88
CN200A110-15	15	13.4	201	2.1	88
CN30A110-24	24	1.3	31.2	0.34	84
CN50A110-24	24	2.1	50.4	0.55	86
CN100A110-24	24	4.2	100.8	1.05	88
CN200A110-24	24	8.4	201.6	2.11	88

Outline Drawing CN30A to CN100A

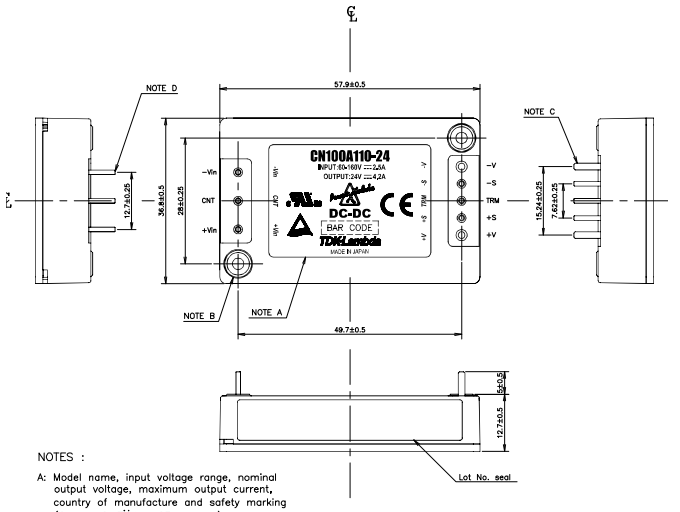

NOTES :

A: Model name, input voltage range, nominal output voltage, maximum output current, country of manufacture and safety marking (C−UL−US, TÜV & CE marking) are shown here in accordance with the specifications.

B: M3 tapped holes 2 for customer chassis mounting (FG).

C: Output terminals : 2−ø1.5

D: Input and signal terminals : 6−ø1

Outline Drawing CN200A

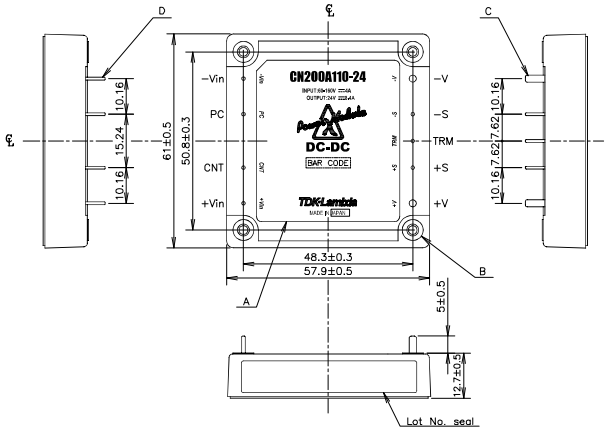

NOTES :

A: Model name, input voltage range, nominal output voltage, maximum output current, country of manufacture are shown here in accordance with the specifications.

B: M3 tapped holes 4 for customer chassis mounting (FG).

C: Output terminals : 2−ø2.0

D: Input and signal terminals : 7−ø1

E: Unless otherwise specified dimensional tolerance : ±0.25

Option

Suffix	Description
/CO	Pcb coating for EN50155 & IEC60571 compliance
Example	CN50A110-5/CO

Heat Sink Accessories

Model	Description
HAQ-10T	CN30A to 100A 25mm transverse fins
HAH-10T	CN200A 25mm transverse fins
HAH-15T	CN200A 38mm transverse fins
HAH-15L	CN200A 38mm longitudinal fins

For Additional Information, please visit
us.tdk-lambda.com/lp/products/cn-series.htm