85W MIL-COTS , 9 to 40V Input Isolated Quarter Brick

https://product.tdk.com/en/power/hqa
www.emea.lambda.tdk.com/HQA



Industrial COTS COMM

The HQA series of isolated DC-DC converters bring a high performance quarter brick in a rugged-encapsulated package for MIL-COTS applications. With its high efficiency performance, magnetic feedback loop and wide operating baseplate temperatures of -40 to 115°C, it provides high useable power at elevated temperatures and altitude for demanding and harsh environments. Various MIL-STD compliance can be supported when paired with the FQA or FQB MIL-COTS input filters.

Features	Benefits
• Up to 85 W in an Industry Quarter Brick package	• High Power Density, Less Board Area Needed
• Encapsulated and Rugged design	• Operation in Harsh and Demanding Environments
• Maximum Baseplate Temperature of 115°C	• High Useable Power at Elevated Temperatures
• No Optocouplers used	• Increased Reliability in High Altitude
• Designed to meet MIL-STD-461; MIL-STD-1275; MIL-STD-704; RTCA/DO-160 Sec 16-18 with FQA / FQB Input Filters	• Facilitates Compliance to Various MIL-STD

Model Selector

Model	Input Voltage (V)	Output Voltage (V)	Max Current (A)	Max Power (W)	Remote Sense	Baseplate	Screening
HQA2W085W033V-007-S	9 - 40	3.3	25	85	Yes	Flanged	-S : Standard
HQA2W085W033V-N07-S	9 - 40	3.3	25	85	Yes	Non-Flanged	-S : Standard
HQA2W085W050V-007-S	9 - 40	5	17	85	Yes	Flanged	-S : Standard
HQA2W085W050V-N07-S	9 - 40	5	17	85	Yes	Non-Flanged	-S : Standard
HQA2W085W120V-007-S	9 - 40	12	7.1	85	Yes	Flanged	-S : Standard
HQA2W085W120V-N07-S	9 - 40	12	7.1	85	Yes	Non-Flanged	-S : Standard
HQA2W085W150V-007-S	9 - 40	15	5.7	85	Yes	Flanged	-S : Standard
HQA2W085W150V-N07-S	9 - 40	15	5.7	85	Yes	Non-Flanged	-S : Standard
HQA2W085W240V-007-S	9 - 40	24	3.5	85	NA	Flanged	-S : Standard
HQA2W085W240V-N07-S	9 - 40	24	3.5	85	NA	Non-Flanged	-S : Standard
HQA2W085W280V-007-S	9 - 40	28	3	85	NA	Flanged	-S : Standard
HQA2W085W280V-N07-S	9 - 40	28	3	85	NA	Non-Flanged	-S : Standard

Consult factory for other valid part number suffixes not shown on the table.

HQA	2W	085W	240V	-	007	-	S

Input Voltage
2W: 9 - 40 V

Output Power
085W: 85 Watts

Output Voltage
280V: 28 V
050V: 5 V

Baseplate Construction:
007: Flanged Baseplate
N07: Non-Flanged Baseplate

Screening Options:
S: Standard Screening
See Screening Option Table below

Screening Options

Operation	S-Grade (Standard Screeening)	M-Grade (Enhanced Sreeening)
Functional Test	Room and Hot Test	Please see HQA120 series
Burn-In	Yes	
Temperature Cycling	No	
Hi-Pot	2250 Vdc	
Visual Inspection	Yes	

Related Products

Type	Type	Description
Isolated DC-DC Converter	HQA120	120W MIL-COTS, Input 9-40V, Isolated Quarter Brick with M-Grade screening available
Isolated DC-DC Converter	GQA	120W Industrial, Input 9-36V, Isolated Quarter Brick
Input Filter	FQA	40V / 20A MIL-COTS Filter for MIL-STD-461
Input Filter	FQB	40V / 20A MIL-COTS Filter for MIL-STD-461; MIL-STD-1275; MIL-STD-704; DO-160G
Evaluation Board	FQX-HQA-EVK-D0	Evaluation board (no modules) that fits 2X HQA or GQA DC-DC converters

Specifications

Model		3.3	5	12	15	24	28
Input							
Input Voltage Range	Vdc	9 - 40					
Input Transient (t < 1s)	Vdc	50					
Input Current (max)	A	13					
Turn-ON Input Voltage	Vdc	9.5 typical					
Turn-OFF Input Voltage	Vdc	8.5 typical					
Efficiency	%	84	91	90	92	87	88.5
Safety Agency Certifications	-	IEC/UL/CSA/EN 62368-1, 60950-1, CE Mark					
Output							
Output Voltage Tolerance	%	±4 (Rated input, Load and Temperature)					
Output Voltage Adjustment Range	Vdc	3.14 - 3.63	4.5 - 5.5	10.8 - 13.2	13.5 - 16.5	21.6 - 26.4	25.2 - 30.8
Line Regulation	%	0.05					
Load Regulation	%	0.1	0.03				
External Load Capacitance	uF	47 - 2200	22 - 2200	0 - 1800	0 - 1500	0 - 1000	0 - 1000
Ripple & Noise	mVpp	20	40	70	100	100	80
Switching Frequency	kHz	270					
Overcurrent Protection Threshold (typ)	A	33	27	11	8	5.2	4.2
Over Voltage protection (typ)	Vdc	5	6.5	15	18	32	35
Over Temperature Protection	-	Shutdown - Autorecovery					
Environmental							
Operating Temperature (Tc)	°C	-40 to 115 (-S : Standard Screening)					
Storage Temperature	°C	-65 to 125					
Humidity (non condensing)	%RH	10 - 95					
Cooling	-	Conduction Cooling					
Isolation Voltage	Vdc	2250 (Input to Output / Input to Baseplate / Output to Baseplate)					
Isolation Resistance	MΩ	> 10					
Shock	-	MIL-STD-202G, Method 213B, Table 213-1, Test Condition I					
Vibration	-	MIL-STD-202G, Method 201A					
Altitude	ft	70,000; MIL-STD-883F Method 1001 / MIL-STD-810G Method 500.5 Procedure I, II, III					
Qualification Methods		MIL-STD-883F; MIL-STD-202G and MIL-STD-810G					
Other							
Weight (max)	g	100 (Flanged Baseplate)					
Size (LxWxH)	mm	Flanged Baseplate: 60.6 x 55.9 x 12.7					
		Non-Flanged Baseplate: 60.6 x 39 x 12.7					
Size (LxWxH)	Inches	Flanged Baseplate: 2.39 x 2.2 x 0.5					
		Non-Flanged Baseplate: 2.39 x 1.54 x 0.5					
MTBF - Telcordia SR-332	-	> 4 MHrs; 100% Load; Ta = 40°C					
Warranty	yrs	3					

Notes:
See website for detailed product specifications.

PIN Assignment

PIN	Function	PIN	Function
1	Vin (+)	5	Sense (-), select models*
2	On/Off	6	Trim
3	Vin (-)	7	Sense (+), select models*
4	Vo (-)	8	Vo (+)

Pin base material is tellurium copper with tin over nickel plating.

* Sense pins are available on 3.3, 5, 12 and 15 V models.

HQA DC-DC Modules with FQB Active Input Filter Module

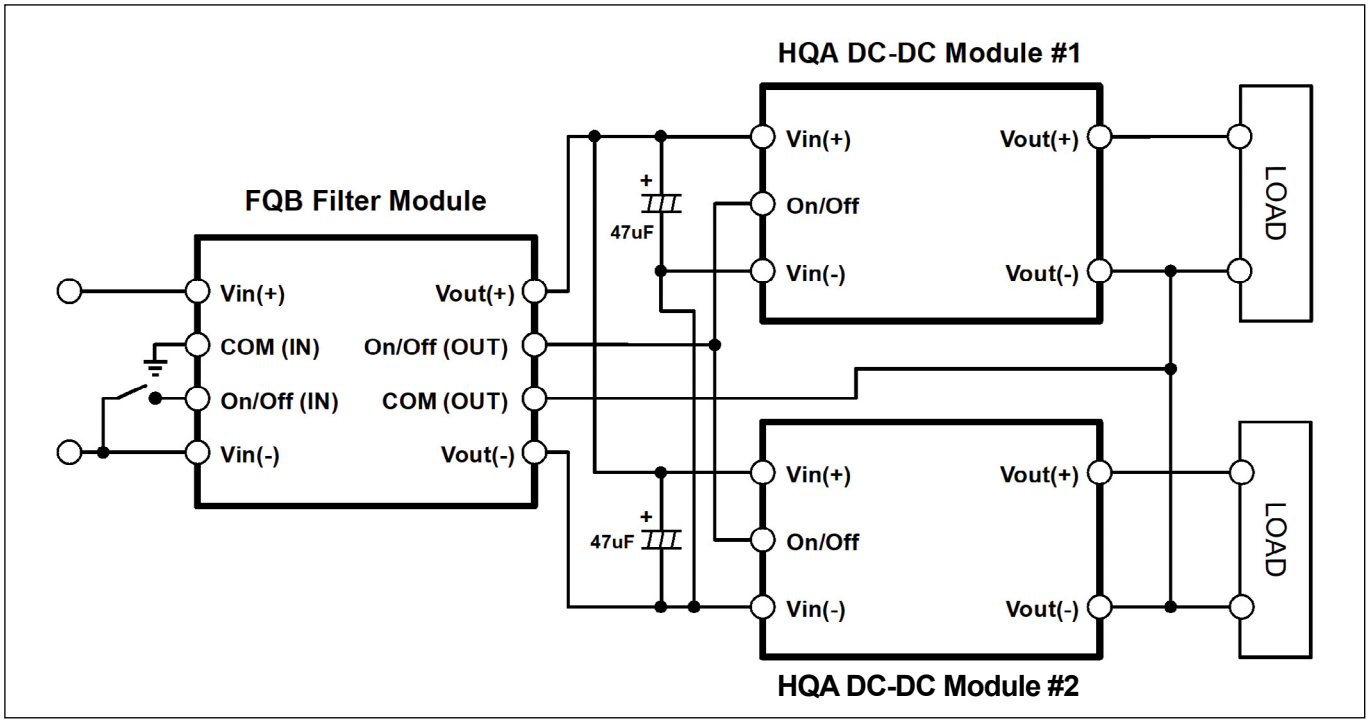

HQA DC-DC Modules with FQA Input Passive Filter Module

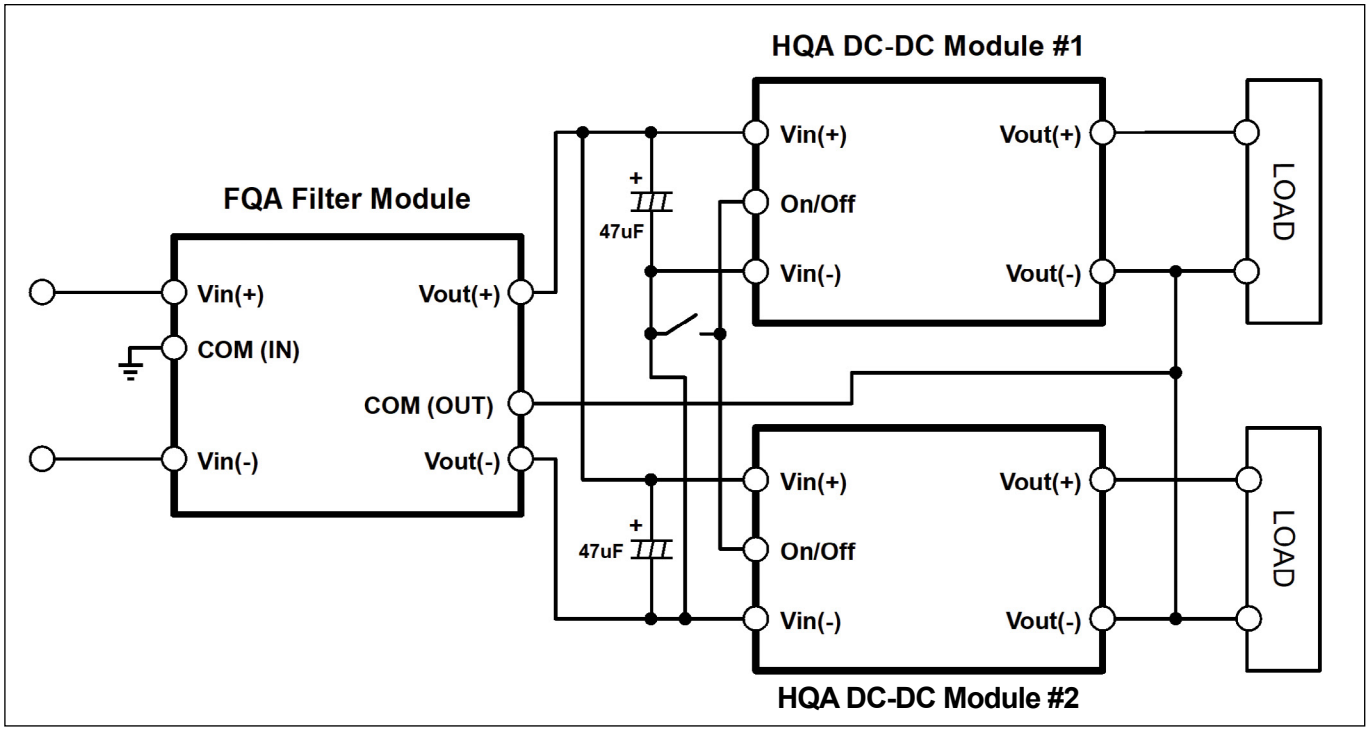

Mechanical Specification: (Flanged Baseplate)

Dimensions are in mm [in]. Unless otherwise specified tolerances are:
x.x [x.xx] ± 0.5 [0.02] , x.xx [x.xxx] ± 0.25 [0.010]

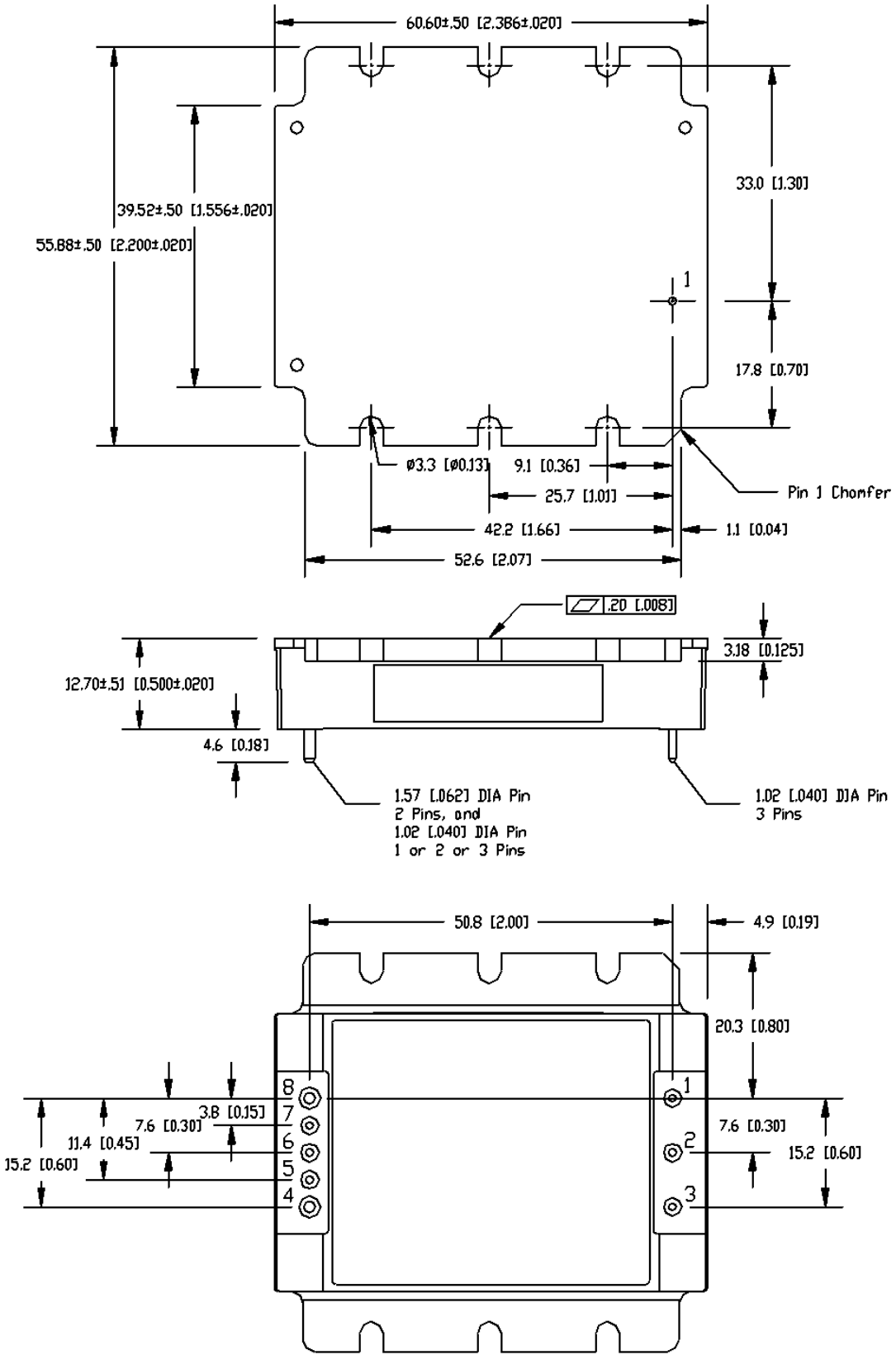

Mechanical Specification: (Non-Flanged Baseplate)

Dimensions are in mm [in]. Unless otherwise specified tolerances are:
x.x [x.xx] ± 0.5 [0.02] , x.xx [x.xxx] ± 0.25 [0.010]
To avoid damaging components, do not exceed 3.0mm [0.12"] depth for M3 screws

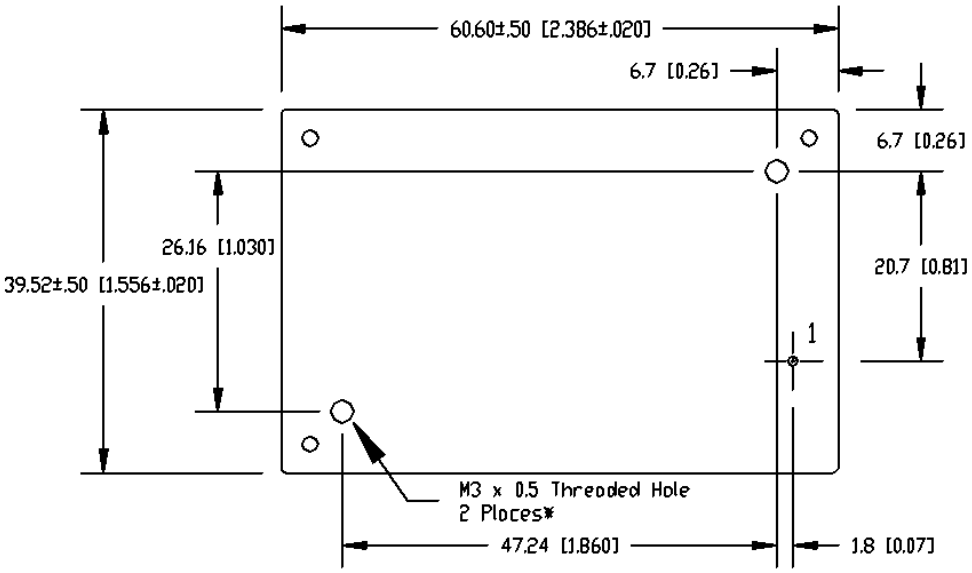

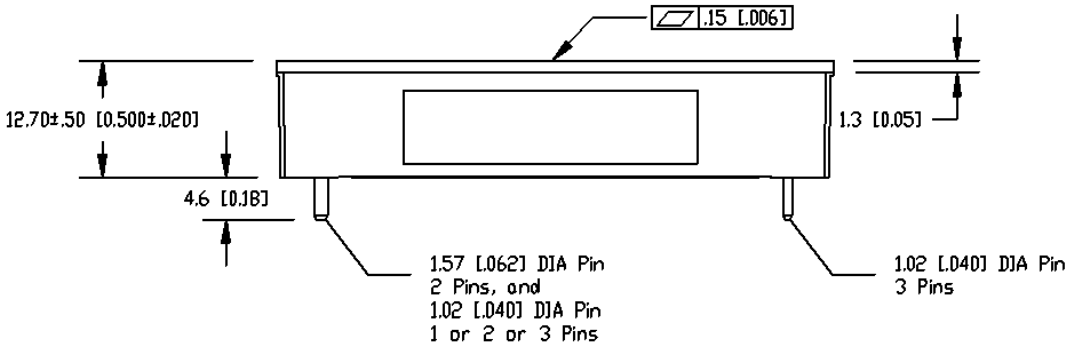

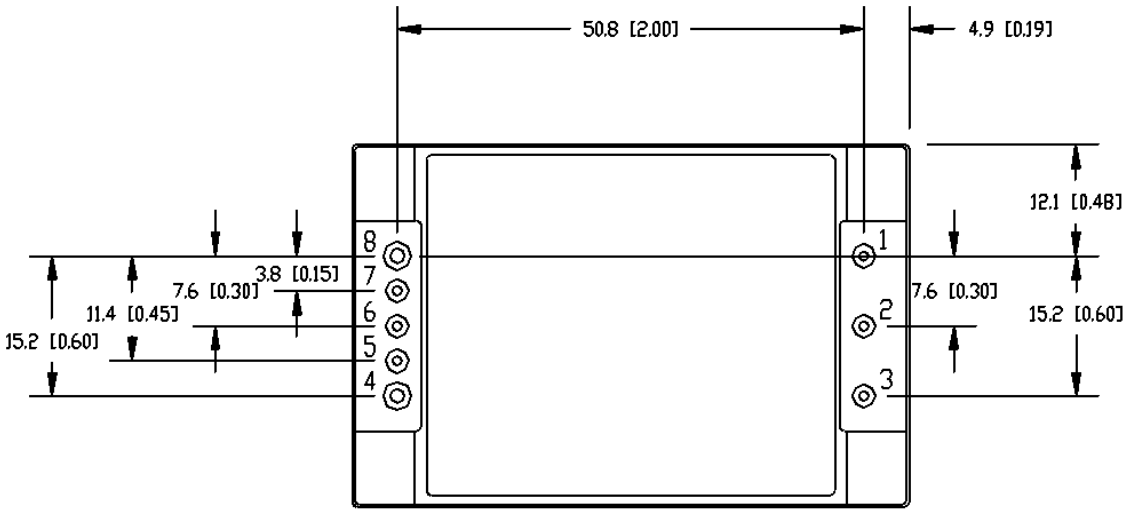

Recommended Hole Pattern

(Pin Side Down – Flanged Baseplate)

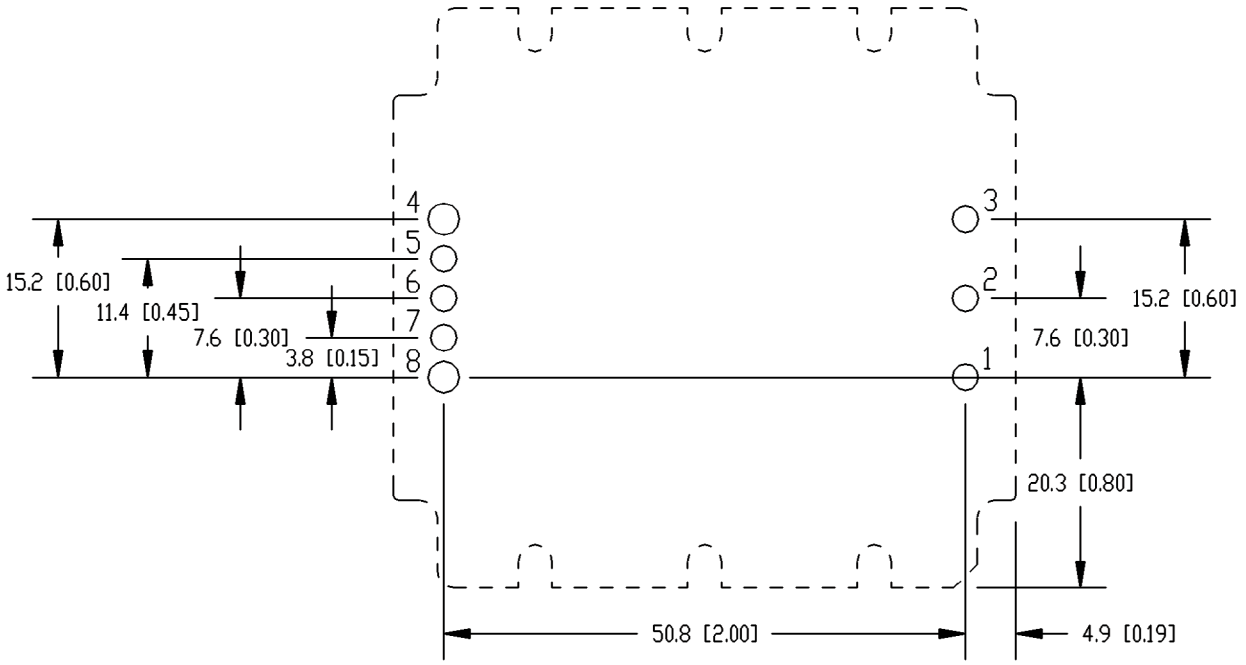

Recommended Hole Pattern

(Pin Side Down – Non-Flanged Baseplate)

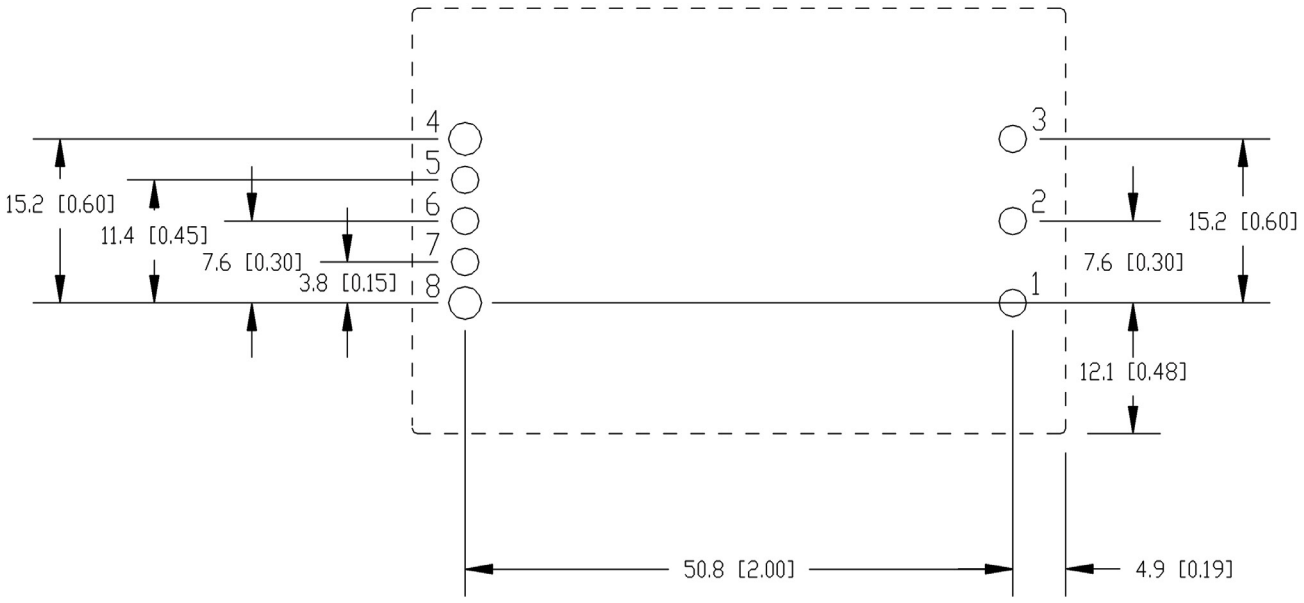

TDK-Lambda France SAS
Tel: +33 1 60 12 71 65
france@fr.tdk-lambda.com
www.emea.lambda.tdk.com/fr

Italy Sales Office
Tel: +39 02 61 29 38 63
info.italia@it.tdk-lambda.com
www.emea.lambda.tdk.com/it

Netherlands
info@nl.tdk-lambda.com
www.emea.lambda.tdk.com/nl

TDK-Lambda Germany GmbH
Tel: +49 7841 666 0
info.germany@de.tdk-lambda.com
www.emea.lambda.tdk.com/de

Austria Sales Office
Tel: +43 2256 655 84
info@at.tdk-lambda.com
www.emea.lambda.tdk.com/at

Switzerland Sales Office
Tel: +41 44 850 53 53
info@ch.tdk-lambda.com
www.emea.lambda.tdk.com/ch

Nordic Sales Office
Tel: +45 8853 8086
info@dk.tdk-lambda.com
www.emea.lambda.tdk.com/dk

TDK-Lambda UK Ltd.
Tel: +44 (0) 12 71 85 66 66
info@uk.tdk-lambda.com
www.emea.lambda.tdk.com/uk

TDK-Lambda Ltd.
Tel: +9 723 902 4333
info@tdk-lambda.co.il
www.emea.lambda.tdk.com/il

C.I.S.
Commercial Support:
Tel: +7 (495) 665 2627
Technical Support:
Tel: +7 (812) 658 0463
info@tdk-lambda.ru
www.emea.lambda.tdk.com/ru

TDK-Lambda Americas
Tel: +1 800-LAMBDA-4 or 1-800-526-2324
powersolutions@us.tdk-lambda.com
www.us.lambda.tdk.com

TDK Electronics do Brasil Ltda
Tel: +55 11 3289-9599
sales.br@tdk-electronics.tdk.com
www.tdk-electronics.tdk.com/en

TDK-Lambda Corporation
Tel: +81-3-6778-1113
www.jp.lambda.tdk.com

TDK-Lambda (China) Electronics Co. Ltd.
Tel: +86 21 6485-0777
powersolutions@cn.tdk-lambda.com
www.lambda.tdk.com.cn

TDK-Lambda Singapore Pte Ltd.
Tel: +65 6251 7211
tls.mkt@sg.tdk-lambda.com
www.sg.lambda.tdk.com

TDK India Private Limited, Power Supply Division
Tel: +91 80 4039-0660
mathew.philip@in.tdk-lambda.com
www.sg.lambda.tdk.com

For Additional Information, please visit
https://product.tdk.com/en/power/