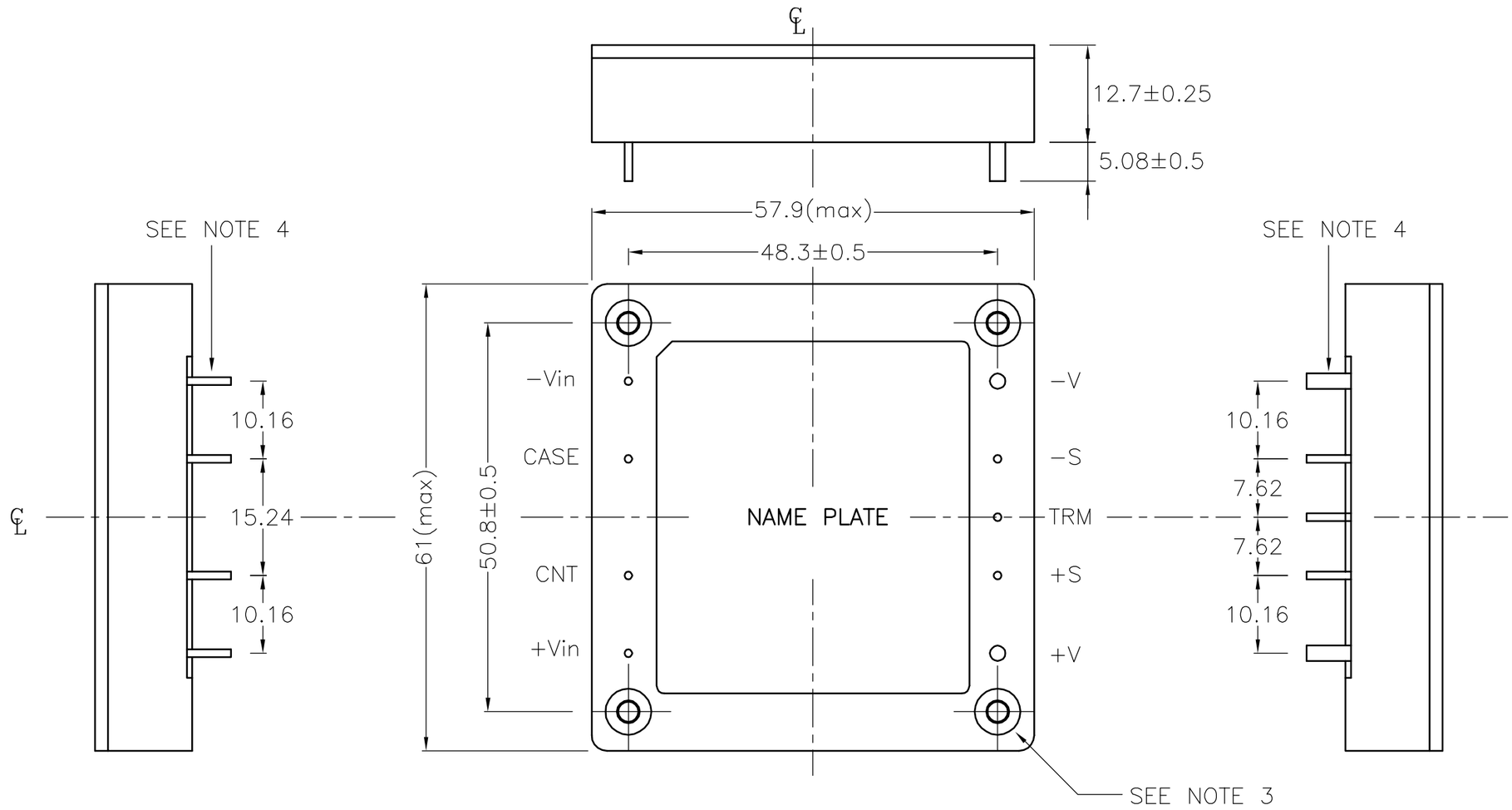

NAME PLATE :

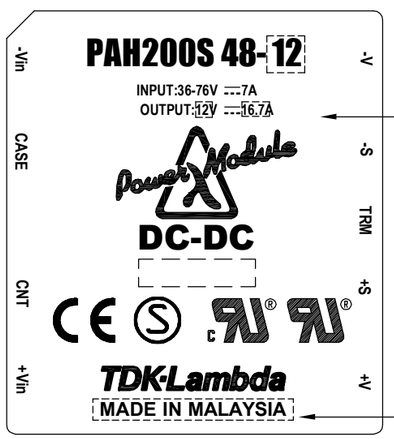

SEE NOTE 1

SEE NOTE 2

NOTE :

1. MODEL NAME, INPUT VOLTAGE RANGE, MAXIMUM INPUT CURRENT, NOMINAL OUTPUT VOLTAGE AND MAXIMUM OUTPUT CURRENT ARE SHOWN HERE IN ACCORDANCE WITH THE SPECIFICATIONS.
2. COUNTRY OF MANUFACTURE WILL BE SHOWN HERE.
3. M3 TAPPED HOLES (4) FOR CUSTOMER CHASSIS MOUNTING.
4. INPUT AND OUTPUT TERMINAL : 2−ø2 (+V, −V)
   7−ø1 (OTHER PINS)
5. UNLESS OTHERWISE SPECIFIED DIMENSIONAL TOLERANCE : ±0.25

(unit : mm)

MODEL NAME	PAH200S48
TDK-Lambda	

PA554−02−01F