Dual Output Half-Brick DC-DC Converters

Features

- Industry Standard Footprint & Pinouts
- Telecom Approvals & Compliance
- Zero Pre-load Current
- 24 or 48VDC input
- Level B EMI with External Filtering
- Remote On / Off
- ASIC Design
- No-preload requirements
- No potting materials used

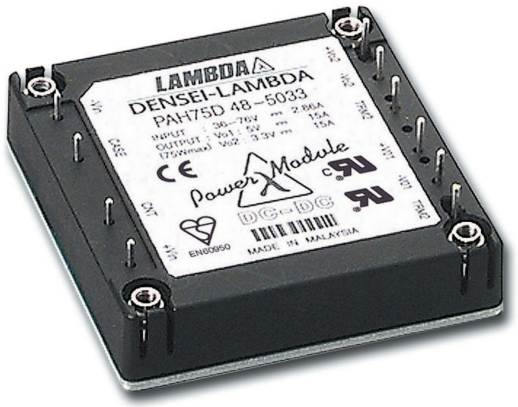

Key Market Segments & Applications

Test COMM

RoHS

Specifications

Model		2518		3318		3325		5033	
		Vo1	Vo2	Vo1	Vo2	Vo1	Vo2	Vo1	Vo2
Nominal Output Voltage	V	2.5	1.8	3.3	1.8	3.3	2.5	5.0	3.3
Output Current (Max)	A	15	15	15	15	15	15	15	15
Total Output Power (Max)	W	45		50		60		75	
Efficiency (Typ at 48VDC input)	%	74		78		78		82	
Input Voltage Range	-	36 ~ 76VDC				18 ~ 36VDC or 36 ~76VDC			
Input Current (Typ) 24/48Vnom	A	-/1.06		-/1.33		2.71/1.33		3.91/1.91	
Output Voltage Accuracy	%	±2							
Output Voltage Adjustment	V	2.5 ~ 2.75	1.8 ~ 1.98	2.97 ~ 3.63	1.8 ~ 1.98	2.97~ 3.63	2.25 ~ 2.75	4.5 ~ 5.5	2.97~ 3.63
Max Ripple & Noise	mV	75	75	100	75	100	75	100	100
Max Line Regulation	mV	±6.6	±6.6	±6.6	±6.6	±6.6	±6.6	±10	±6.6
Max Load Regulation	mV	±16.5	±16.5	±16.5	±16.5	±16.5	±16.5	±25	±16.5
Over Current Protection (1)	%	105-165	105-165	105-165	105-165	105-165	105-165	105-165	105-165
	A	Vo2@0A	Vo1@5A	Vo2@0A	Vo1@5A	Vo2@0A	Vo1@5A	Vo2@0A	Vo1@5A
Over Voltage Protection	%	115-140	115-150	115-140	115-150	115-140	115-140	125-145	115-140
Operating Temperature	-	-40ºC ~ +100ºC (Baseplate)							
Cooling	-	Conduction cooled							
Isolation Voltage	-	Input-Output : 1.5kVDC, Input-Baseplate:1.5kVDC (20mA) for 1 min Output-Baseplate: 500VDC for 1 min							
Shock	m/s^2	196.1							
Safety Agency Approvals	-	UL60950-1, CSA60950-1, EN60950-1, CE Marking (48V input only)							
Weight (Typ.)	g	80							
Vibration	-	Non Operating, 10-55Hz (Sweep for 1min.)							
	-	Amplitude 0.825mm Constant (Maximum 49.0m/s^2) X, Y, Z 1 hour each							
Size (W×H×D)	mm	57.9 x 12.7 x 61 (Refer to outline drawing)							

(1) Other channel at output current specified.

Dual Output Outline Drawing

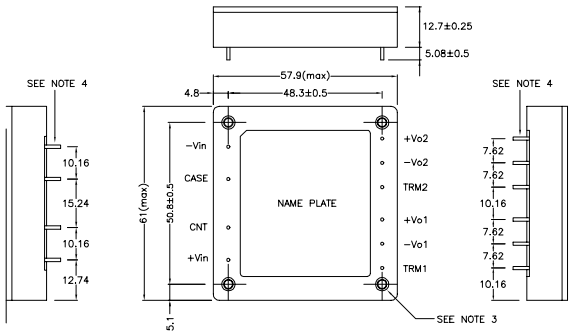

M3 tapped holes (4) for customer chassis mounting.

All of the terminals: 10-Ø1.0 mm

PAH Series Dual Output

PIN#	Description	Function
1	-Vin	Negative Input Terminal
2	CASE	Baseplate Terminal
3	CNT	ON/OFF Control Terminal
4	+Vin	Positive Input Terminal
5	+VO2	VO2 Positive Output Terminal
6	-VO2	VO2 Negative Output Terminal
7	TRM2	VO2 Output Adjust. Terminal
8	+VO1	VO1 Positive Output Terminal
9	-VO1	VO1 Negative Output Terminal
10	TRM1	VO1 Output Adjust. Terminal

Options

Suffix	ON/OFF Control	OVP
-	Negative	Manual Reset
/P	Positive	Manual Reset
/V*	Negative	Auto Restart
/PV	Positive	Auto Restart

* standard US stock item

PAH Series Model Number Example

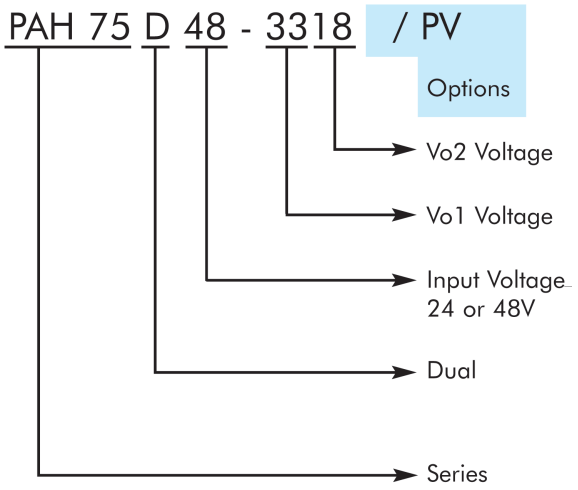

For Additional Information, please visit
us.tdk-lambda.com/lp/products/pah-series.htm