LAMBDA PAQ100 Series

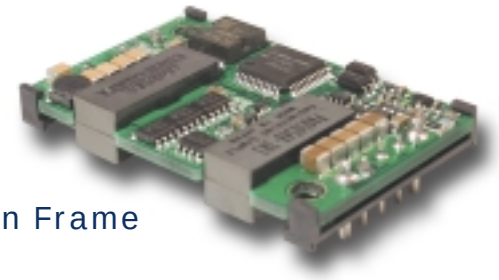

Open Frame



Baseplate

Quarter Brick Power Supply Specifications

- Low Voltage Outputs (1.2-5.0V)
- High Power Density up to 90.4W/in^3
- Industry Standard Footprint & Pinouts
- Safety Agency Approvals (UL1950, CSA22.2, CE, TUV)
- Constant Current Limit (Auto Restarting)
- Remote On / Off (Positive/Negative Logic Available)
- ASIC Design to Reduce Component Count

Key Market Segments & Applications

Central Office:	ATM, Sonet, DSL, ISDN, Frame Relay, WDM
Broadband:	Switching Equipment, Routers
Wireless/Celluar:	Micro Cells (larger in size/10 sq. mi.) Pico Cells (smaller in size/1 to 2 sq. mi.)
Remote Electronics:	Fixed Local Loop, Fiber Optic Transmission, Microwave Transmission, Wireless Local Loop
Customer Premise:	PBX, PABX, Datacomm, Voice Systems, Video Conferencing
Industrial	ATE Test Equipment & Semi-Fab

PAQ Features and Benefits

Feature	Benefit
◆ Industry Standard footprint/pinout	◆ Allows for multi-sourcing
◆ ASIC Design	◆ Reduces number of components
◆ Wide Range Operating Temperature (-40 to 100°C)	◆ Supports Harsh Wireless Operating Environment
◆ High Efficiency 89% at 3.3V (PAQ100)	◆ Reduce footprint area/Operation without heatsink

Specifications

ITEMS / MODEL			PAQ100S48-1R2	PAQ100S48-1R8	PAQ100S48-2R5	PAQ100S48-3R3	PAQ100S48-5
Nominal Output Voltage		V	1.2	1.8	2.5	3.3	5
Max Output Current		A	25	25	25	25	20
Max Output Power		W	30	45	62.5	82.5	100
Efficiency (Typ.)	(*1)	%	80	84	86	89	90
Input Voltage Range		-	36 - 76VDC				
Input Current (Typ.)	(*1)	A	0.8	1.14	1.55	1.98	2.37
Output Voltage Accuracy	(*1)	%	±1				
Output Voltage Range	(*4)	-	-20%, +10%			±15%	
Max Ripple & Noise	(*4)	mV	100	100	100	100	100
Max Line Regulation	(*2)	mV	10	10	10	10	10
Max Load Regulation	(*3)	mV	10	10	10	10	10
Over Current Protection		-	105% - 140% (Self-Recovering /V option)				
Over Voltage Protection		-	120% - 140% (Self-Recovering /V option)				
Remote ON/OFF Control		-	Low=On, Open=Off (/P option: Low=Off, Open=On)				
Operating Temperature	(*5)	C	Ta= -40º - +85º (100ºC /B Option)				
Cooling	(*5)	-	Convection Cooled / Forced Air Cooled				
Isolation Voltage		-	Input-Output : 1.5kVDC for 1min				
Shock		-	196.1m/s^2				
Weight (Typ.)		g	50				
Vibration		-	Non Operating, 10-55Hz (Sweep for 1min.)				
		-	Amplitude 0.825mm Constant (Maximum 49.0m/s^2) X, Y, Z 1 hour each				
Size (W×H×D)		in	1.45" x .33" x 2.3"; .5" height (/B Option)				
Warranty		-	2 years				

Notes:
*1. At 48VDC, maximum output current, Air Velocity = 2m/s and Ta = +25°C.
*2. 36 - 76VDC, constant load.
*3. No load - Full load, constant input voltage.
*4. External components are needed for operation.
*5. Refer to installation manual (website).

3055 Del Sol Blvd • San Diego, CA 92154 • 1-800-LAMBDA-4

PAQ100 Series

PAQ100 Openframe Drawing

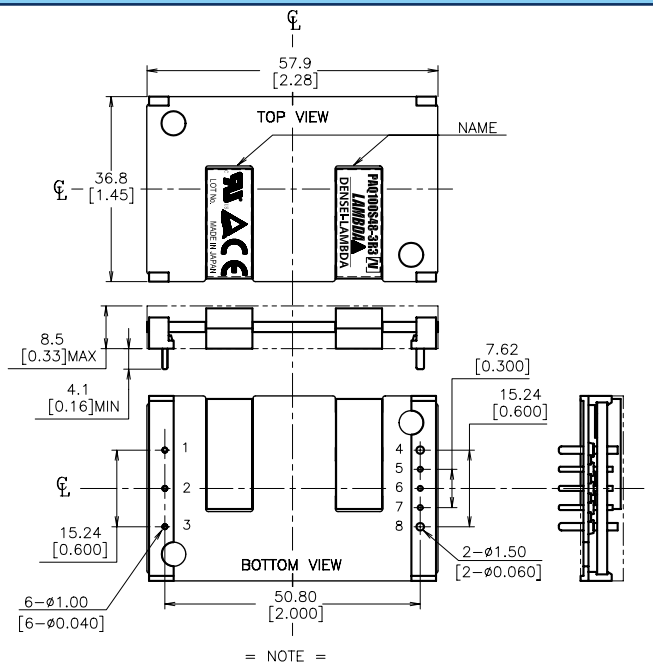

= NOTE =

Dimensions are in millimeters and [inches].
Tolerances: *.*mm±0.5mm[*.**in.±0.02in.]
*.**mm±0.25mm[*.***in.±0.010in.]

PAQ100 Baseplate Drawing

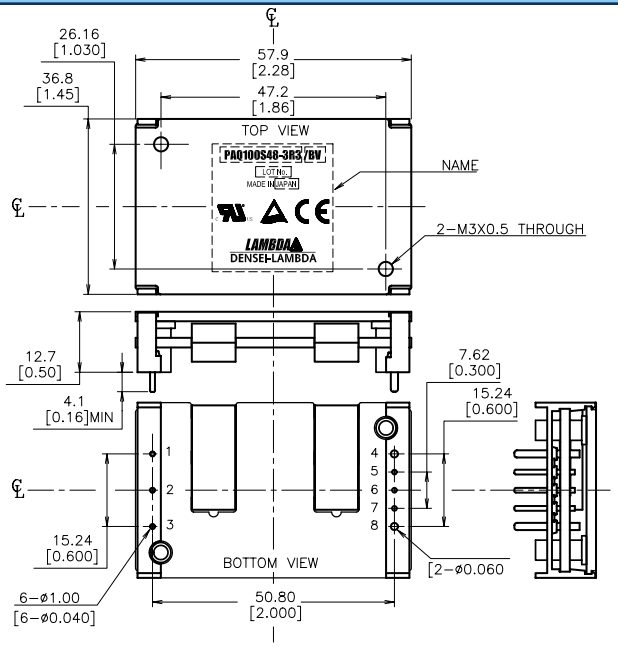

= NOTE =

Dimensions are in millimeters and [inches].
Tolerances: *.*mm±0.5mm[*.**in.±0.02in.]
*.**mm±0.25mm[*.***in.±0.010in.]

PAQ Series Outputs

PIN#	Label	Function
1	-Vin	Negative Input Terminal
2	CNT	ON/OFF Control Terminal
3	+Vin	Positive Input Terminal
4	-V	Negative Output Terminal
5	-S	Negative Remote Sensing
6	TRM	Output Voltage Adjustment Terminal
7	+S	Positive Remote Sensing
8	+V	Positive Output Terminal

PAQ Series Options

Suffix	Description
Blank	Manual Reset after OVP or OCP condition
/V	Auto Reset after OVP or OCP condition
/P	Positive Logic Remote On/Off
/B	Baseplate version

/V, /PV, /BV, /BPV are Standard US stock items.

PAQ100 Derating Curve

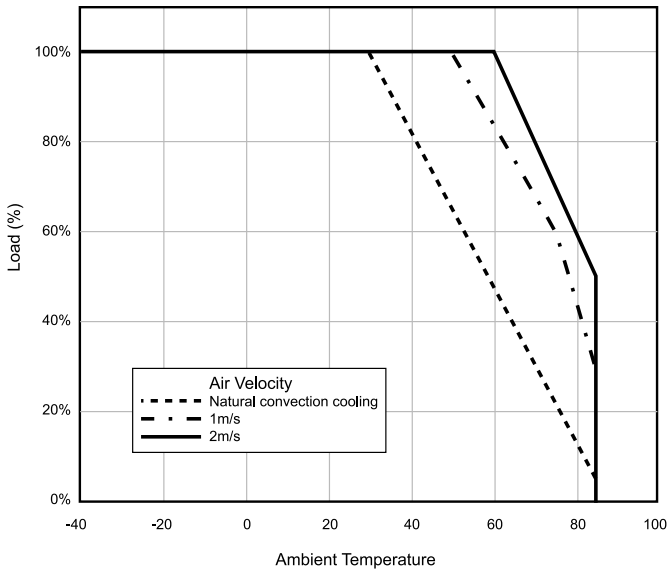

Note: Open Frame PAQ100S48-3.3/V unit shown.

For Additional Information, please visit www.lambdapower.com/products/paq-series.htm