# LAMBDA PAQ100 Series

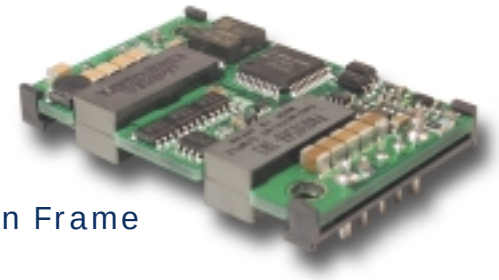

Open Frame



Baseplate

## Quarter Brick Power Supply Specifications

- Low Voltage Outputs (1.2-5.0V)
- High Power Density up to 90.4W/in$^3$
- Industry Standard Footprint & Pinouts
- Safety Agency Approvals (UL1950, CSA22.2, CE, TUV)
- Constant Current Limit (Auto Restarting)
- Remote On / Off (Positive/Negative Logic Available)
- ASIC Design to Reduce Component Count

## Key Market Segments & Applications

| | |
|---|---|
| Central Office: | ATM, Sonet, DSL, ISDN, Frame Relay, WDM |
| Broadband: | Switching Equipment, Routers |
| Wireless/Celluar: | Micro Cells (larger in size/10 sq. mi.) Pico Cells (smaller in size/1 to 2 sq. mi.) |
| Remote Electronics: | Fixed Local Loop, Fiber Optic Transmission, Microwave Transmission, Wireless Local Loop |
| Customer Premise: | PBX, PABX, Datacomm, Voice Systems, Video Conferencing |
| Industrial | ATE Test Equipment & Semi-Fab |

## PAQ Features and Benefits

| Feature | Benefit |
|---|---|
| ◆ Industry Standard footprint/pinout | ◆ Allows for multi-sourcing |
| ◆ ASIC Design | ◆ Reduces number of components |
| ◆ Wide Range Operating Temperature (-40 to 100°C) | ◆ Supports Harsh Wireless Operating Environment |
| ◆ High Efficiency 89% at 3.3V (PAQ100) | ◆ Reduce footprint area/Operation without heatsink |

## Specifications

| ITEMS / MODEL | | | PAQ100S48-1R2 | PAQ100S48-1R8 | PAQ100S48-2R5 | PAQ100S48-3R3 | PAQ100S48-5 |
|---|---|---|---|---|---|---|---|
| Nominal Output Voltage | | V | 1.2 | 1.8 | 2.5 | 3.3 | 5 |
| Max Output Current | | A | 25 | 25 | 25 | 25 | 20 |
| Max Output Power | | W | 30 | 45 | 62.5 | 82.5 | 100 |
| Efficiency (Typ.) | (*1) | % | 80 | 84 | 86 | 89 | 90 |
| Input Voltage Range | | - | 36 - 76VDC | | | | |
| Input Current (Typ.) | (*1) | A | 0.8 | 1.14 | 1.55 | 1.98 | 2.37 |
| Output Voltage Accuracy | (*1) | % | ±1 | | | | |
| Output Voltage Range | (*4) | - | -20%, +10% | | | ±15% | |
| Max Ripple & Noise | (*4) | mV | 100 | 100 | 100 | 100 | 100 |
| Max Line Regulation | (*2) | mV | 10 | 10 | 10 | 10 | 10 |
| Max Load Regulation | (*3) | mV | 10 | 10 | 10 | 10 | 10 |
| Over Current Protection | | - | 105% - 140% (Self-Recovering /V option) | | | | |
| Over Voltage Protection | | - | 120% - 140% (Self-Recovering /V option) | | | | |
| Remote ON/OFF Control | | - | Low=On, Open=Off (/P option: Low=Off, Open=On) | | | | |
| Operating Temperature | (*5) | C | Ta= -40º - +85º (100ºC /B Option) | | | | |
| Cooling | (*5) | - | Convection Cooled / Forced Air Cooled | | | | |
| Isolation Voltage | | - | Input-Output : 1.5kVDC for 1min | | | | |
| Shock | | - | 196.1m/s$^2$ | | | | |
| Weight (Typ.) | | g | 50 | | | | |
| Vibration | | - | Non Operating, 10-55Hz (Sweep for 1min.) | | | | |
| | | - | Amplitude 0.825mm Constant (Maximum 49.0m/s$^2$) X, Y, Z 1 hour each | | | | |
| Size (W×H×D) | | in | 1.45" x .33" x 2.3"; .5" height (/B Option) | | | | |
| Warranty | | - | 2 years | | | | |

Notes:
*1. At 48VDC, maximum output current, Air Velocity = 2m/s and Ta = +25°C.
*2. 36 - 76VDC, constant load.
*3. No load - Full load, constant input voltage.
*4. External components are needed for operation.
*5. Refer to installation manual (website).

3055 Del Sol Blvd • San Diego, CA 92154 • 1-800-LAMBDA-4

# PAQ100 Series

## PAQ100 Openframe Drawing

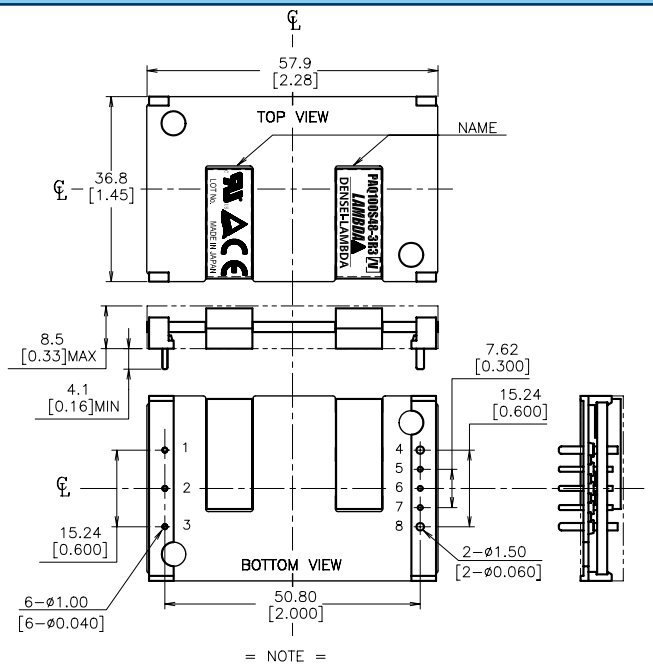


= NOTE =

Dimensions are in millimeters and [inches].
Tolerances: *.*mm±0.5mm[*.**in.±0.02in.]
*.**mm±0.25mm[*.***in.±0.010in.]

## PAQ100 Baseplate Drawing

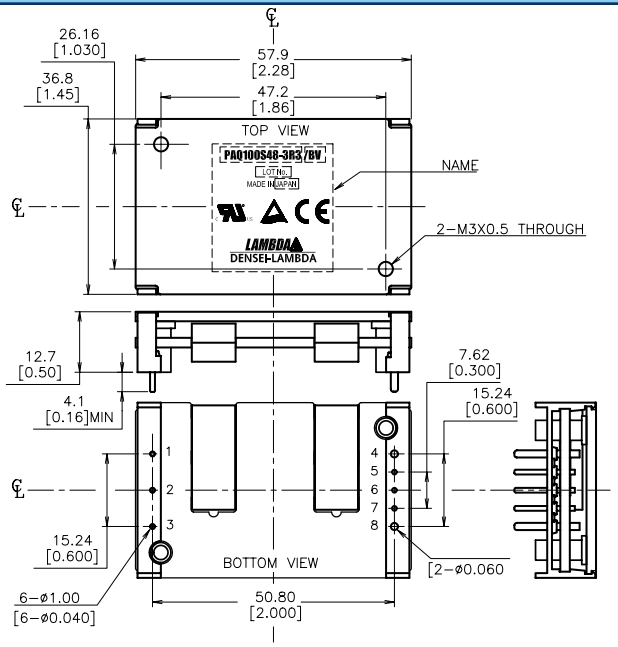


= NOTE =

Dimensions are in millimeters and [inches].
Tolerances: *.*mm±0.5mm[*.**in.±0.02in.]
*.**mm±0.25mm[*.***in.±0.010in.]

## PAQ Series Outputs

| PIN# | Label | Function |
|---|---|---|
| 1 | -Vin | Negative Input Terminal |
| 2 | CNT | ON/OFF Control Terminal |
| 3 | +Vin | Positive Input Terminal |
| 4 | -V | Negative Output Terminal |
| 5 | -S | Negative Remote Sensing |
| 6 | TRM | Output Voltage Adjustment Terminal |
| 7 | +S | Positive Remote Sensing |
| 8 | +V | Positive Output Terminal |

## PAQ Series Options

| Suffix | Description |
|---|---|
| Blank | Manual Reset after OVP or OCP condition |
| /V | Auto Reset after OVP or OCP condition |
| /P | Positive Logic Remote On/Off |
| /B | Baseplate version |

/V, /PV, /BV, /BPV are Standard US stock items.

## PAQ100 Derating Curve

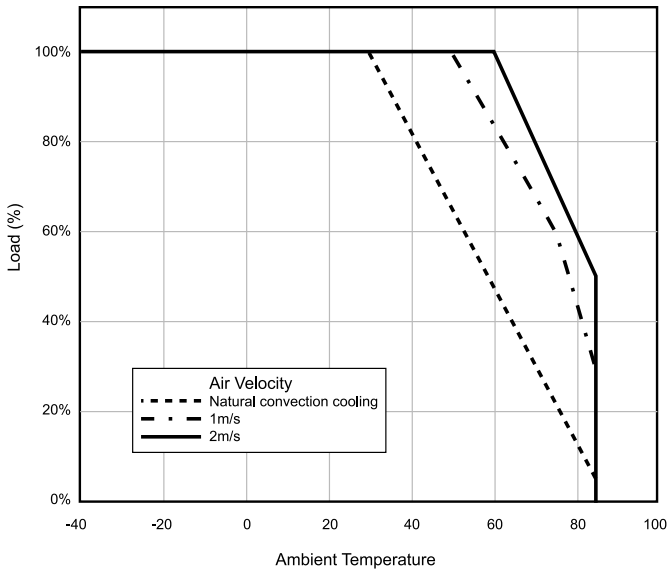


Note: Open Frame PAQ100S48-3.3/V unit shown.

For Additional Information, please visit www.lambdapower.com/products/paq-series.htm