https://product.tdk.com/en/power/i7c
www.emea.tdk-lambda.com/i7c

# 300W, 9 to 53V or 9 to 36V Input Non-Isolated Buck-Boost DC-DC Converter


Industrial


Test


COMM


Broadcast


Robotics

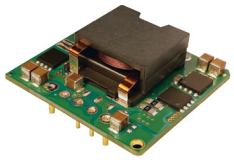





The i7C series of non-isolated step-up / step-down converters are ideal for generating additional DC output voltage rails up to 300 W from a single output 12V, 24V or 48V AC-DC power supply. The highly efficient i7C series accepts a very wide DC input and has a wide output adjustment range. Three mechanical configurations are available; low profile open frame, baseplate construction for conduction cooling, or integral heat sink for convection or forced air cooling. A full feature* Power Good signal, switching frequency synchronization and output current monitoring option is available.

| Features | Benefits |
|---|---|
| • Up to 300W in a 1/16th Brick Pin-Out | • High Power Density, Less Board Area Needed |
| • High Efficiency - Up to 97% | • Longer Battery Life / Low Power Consumed |
| • Wide 5 to 28V, 8 to 24V or 9.6 to 48V Output Adjustment | • One Part Supports Multiple System Voltages |
| • Wide 9 to 36V or 9 to 53V Input Range | • Can Operate From Different DC Source Voltages |
| • Low Component Count With Minimal External Components | • Low Cost |
| • Low Airflow With Minimal Derating Requirements | • Easy To Cool In End System |

## Model Selector

| Model | Input Voltage (V) | Output Voltage (V) | Max Current (A) | Max Power (W) | Positive Logic On/Off | Negative Logic On/Off | Full Feature* | Integrated Heatsink | Integrated Baseplate |
|---|---|---|---|---|---|---|---|---|---|
| i7C4W008A120V-001-R | 9 - 53 | 9.6 - 48 | 8 | 300 | - | Yes | - | - | - |
| i7C4W008A120V-002-R | 9 - 53 | 9.6 - 48 | 8 | 300 | Yes | - | Yes | - | - |
| i7C4W008A120V-003-R | 9 - 53 | 9.6 - 48 | 8 | 300 | - | Yes | Yes | - | - |
| i7C4W008A120V-0C1-R | 9 - 53 | 9.6 - 48 | 8 | 300 | - | Yes | - | - | Yes |
| i7C4W008A120V-0C3-R | 9 - 53 | 9.6 - 48 | 8 | 300 | - | Yes | Yes | - | Yes |
| i7C4W008A120V-0F1-R | 9 - 53 | 9.6 - 48 | 8 | 300 | - | Yes | - | Yes | - |
| i7C4W012A050V-001-R | 9 - 53 | 5 - 28 | 12.5 | 300 | - | Yes | - | - | - |
| i7C4W012A050V-002-R | 9 - 53 | 5 - 28 | 12.5 | 300 | Yes | - | Yes | - | - |
| i7C4W012A050V-003-R | 9 - 53 | 5 - 28 | 12.5 | 300 | - | Yes | Yes | - | - |
| i7C4W012A050V-0C1-R | 9 - 53 | 5 - 28 | 12.5 | 300 | - | Yes | - | - | Yes |
| i7C4W012A050V-0C3-R | 9 - 53 | 5 - 28 | 12.5 | 300 | - | Yes | Yes | - | Yes |
| i7C4W012A050V-0F1-R | 9 - 53 | 5 - 28 | 12.5 | 300 | - | Yes | - | Yes | - |
| i7C2W020A120V-001-R ** | 9 - 36 | 8 - 24 | 20 | 300 | - | Yes | - | - | - |
| i7C2W020A120V-002-R ** | 9 - 36 | 8 - 24 | 20 | 300 | Yes | - | Yes | - | - |
| i7C2W020A120V-003-R ** | 9 - 36 | 8 - 24 | 20 | 300 | - | Yes | Yes | - | - |

Preferred model

* Consult factory for a part number suffix of other feature combinations.
** Contact Sales for release dates

## Evaluation Kit

| Type | Part Number | Description |
|---|---|---|
| Evaluation Kit | i7C08A-C03-EVK-S1 | Evaluation kit with i7C4W008A120V-003-R Full-Featured Module |
| | i7C12A-C03-EVK-S1 | Evaluation kit with i7C4W012A050V-003-R Full-Featured Module |
| | i7C20A-C03-EVK-S1 | Evaluation kit with i7C2W020A120V-003-R Full-Featured Module |

## Specification

| Model | | i7C4W012A050V | i7C4W008A120V | i7C2W020A120V |
|---|---|---|---|---|
| **Input** | | | | |
| Input Voltage range | Vdc | 9 - 53 (Turn on at 9.5V typ) | | 9 - 36 (Turn on at 9.5V typ) |
| Input Current (max) | A | 25 | | 30 |
| Standby Input Current (typ) | mA | 0.25 (Nominal input, ON/OFF = OFF) | | |
| No Load Input Current, Vin = 24 V (typ) | mA | 5.0 (Vo = 12 V) | | 5.0 (Vo = 24 V) |
| Efficiency | % | 91 - 96 | 93 - 97 | 94 - 97 |
| Safety Agency Certifications | - | IEC/UL/CSA/EN62368-1, 60950-1, CE Mark | | |
| **Output** | | | | |
| Output Voltage Tolerance | % | ± 4 | | |
| Switching Frequency | kHz | 250 | | |
| Line Regulation | % | 0.8 | 0.8 | 0.8 |
| Load Regulation | % | 0.8 | 0.5 | 0.8 |
| External Load Capacitance | uF | 330 - 3000 | | 1000 - 5000 |
| Ripple & Noise | mV | 200 | 180 | 200 |
| Overcurrent Protection Threshold (typ) | A | 17 | 15 | 26 |
| Overtemperature Protection | - | Yes | | |
| Remote Sense | - | (+) Sense, compensating up to 5% of output voltage | | |
| Remote On/Off | - | See Model Selector | | |
| Power Good | - | Optional (Full Feature Version) | | |
| Frequency Synchronization (Sync) | - | Optional (Full Feature Version) | | |
| Current Monitor | - | Optional (Full Feature Version) | | |
| Parallel Operation | - | Not possible | | |
| Series Operation | - | Not possible | | |
| **Environmental** | | | | |
| Operating Temperature | °C | -40 to 125 (See i7C4W Specification; i7C2W Specification for Derating) | | |
| Storage Temperature | °C | -55 to 125 | | |
| Humidity (non condensing) | %RH | 5 - 95 (Operating & Storage) | | |
| Cooling | - | Convection, conduction (baseplate) or forced air | | Convection or forced air |
| **Other** | | | | |
| Weight (Typ) | g | Open Frame: 25g, with Baseplate: 50g, with Heatsink: 70g | | Open Frame: 28g |
| Size (LxWxH) | mm | Open Frame: 34 x 36.8 x 12.2 | | 34 x 36.8 x 14.7 |
| | | With Baseplate: 34 x 36.8 x 13.0 | | - |
| | | With Heatsink: 34 x 36.8 x 24.9 | | - |
| Size (LxWxH) | Inches | Open Frame: 1.34 x 1.45 x 0.5 | | 1.34 x 1.45 x 0.58 |
| | | With Baseplate: 1.34 x 1.45 x 0.51 | | - |
| | | With Heatsink: 1.34 x 1.45 x 0.98 | | - |
| MTBF - Telcordia SR-332 | - | > 10 MHrs; 100% Load; Ta = 40 °C | | |
| Warranty | yrs | 3 years | | |

Notes
See website for detailed specifications and test methods.

## Typical Application Circuit (i7C4W)

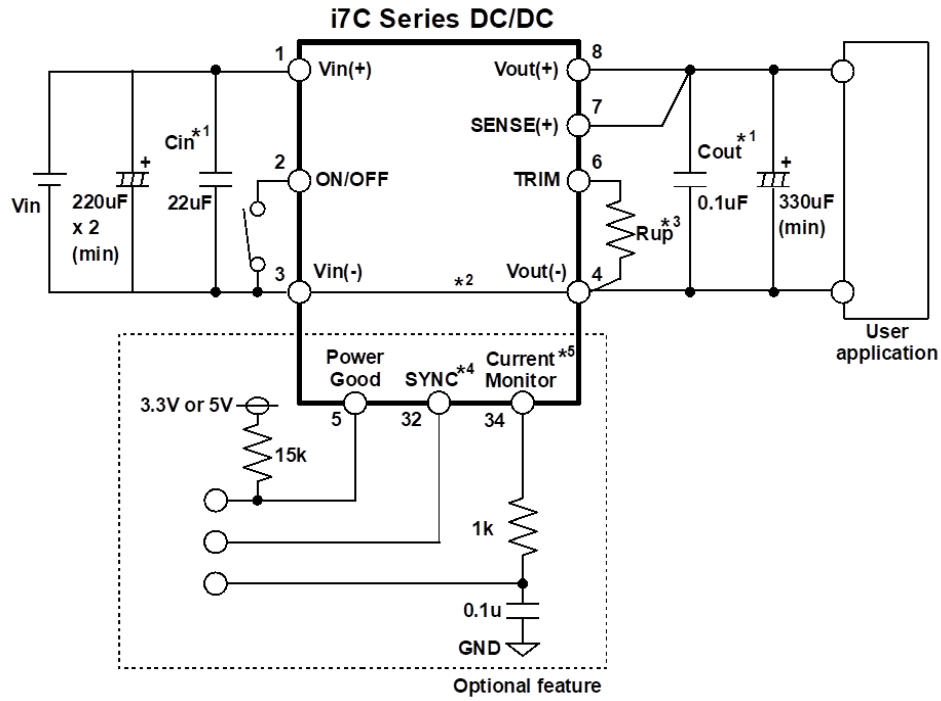


## Typical Application Circuit (i7C2W)

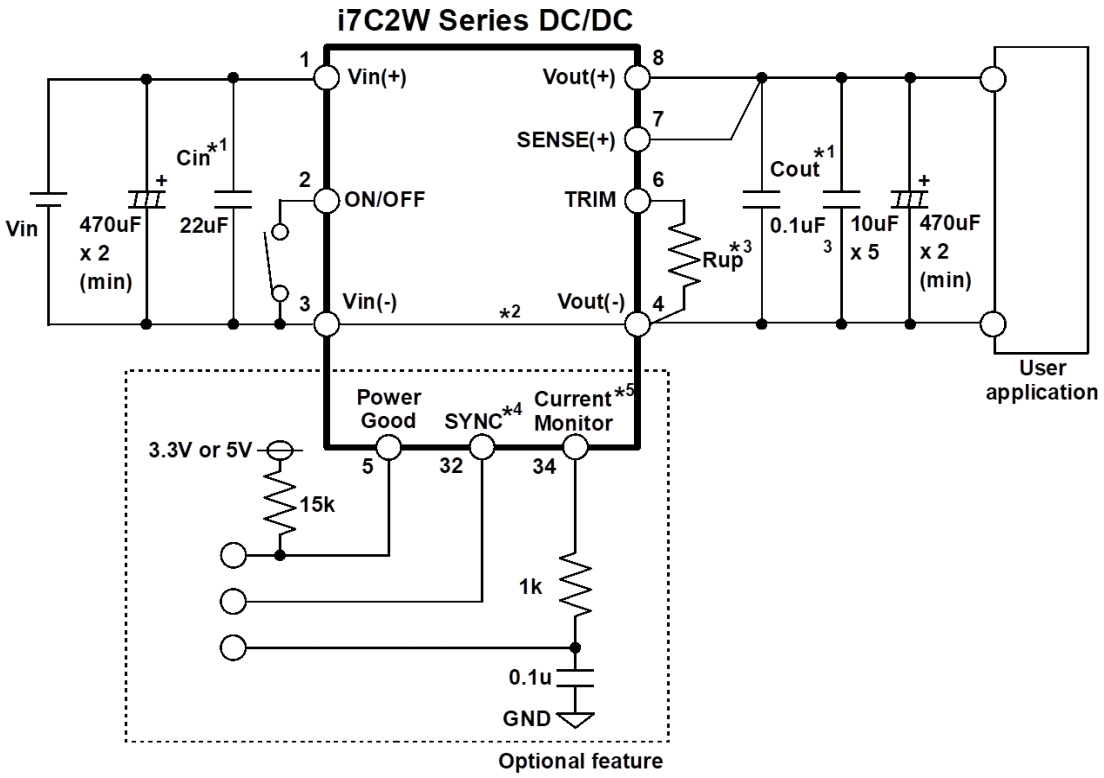


Recommendations:
1. Cin/Cout MLCC should be connected to the i7C module as close as possible in order to reject high frequency noise.
2. Connect Vin(-) and Vout(-) to copper ground plane underneath the i7C module.
3. TRIM resistor “Rup” should be connected to the i7C module as close as possible.
4. SYNC must be connected to GND when not in use.
5. External R-C filter is needed for Current Monitor, as shown, for Current Monitor.

## Operating Range i7C4W0008A120V

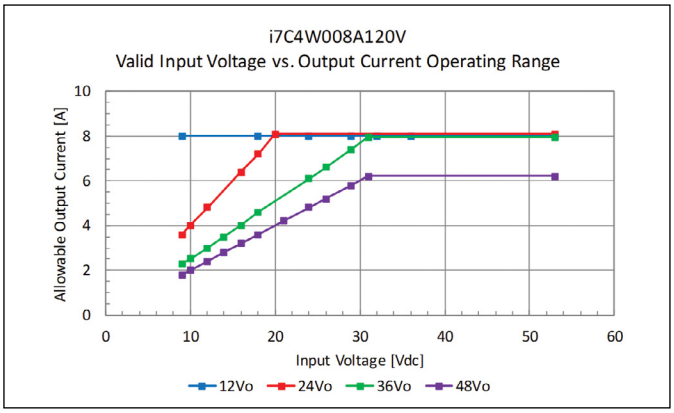


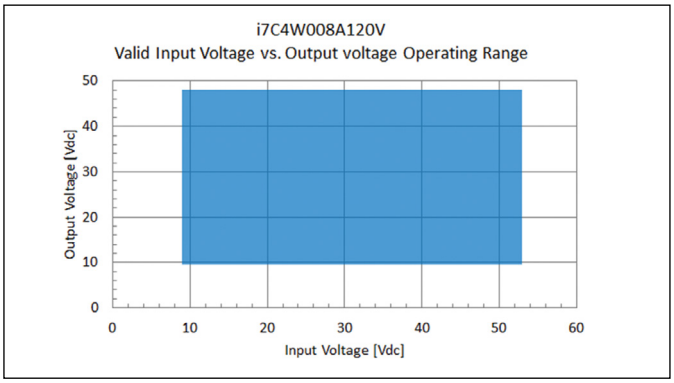


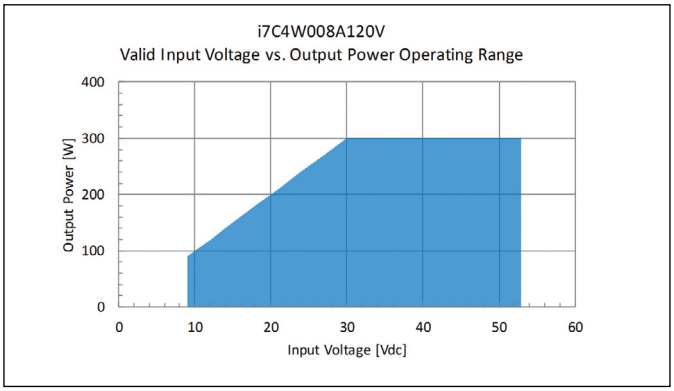


## Operating Range i7C4W012A050V

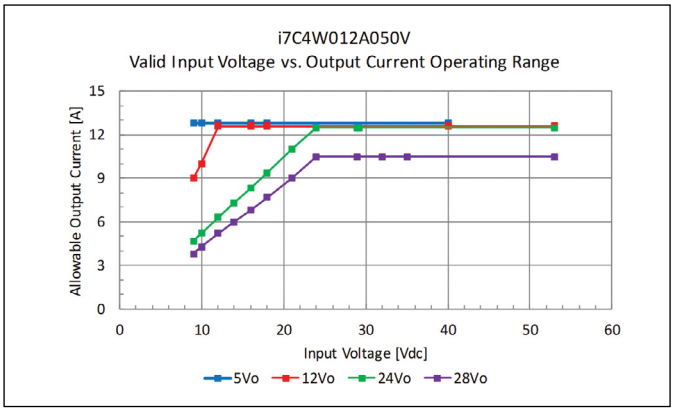


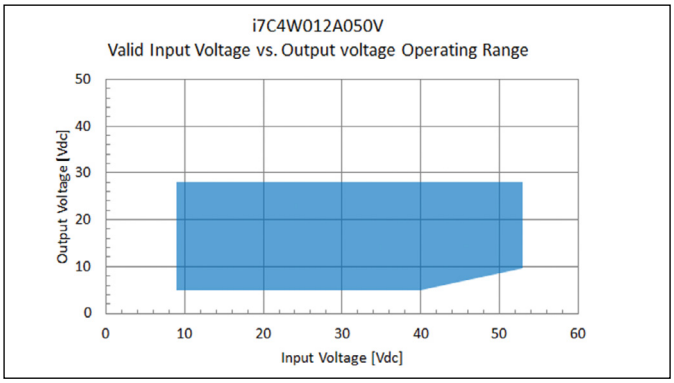


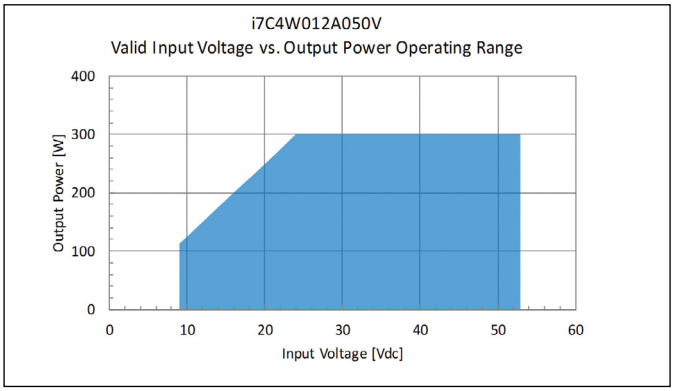

## Operating Range i7C2W020A120V

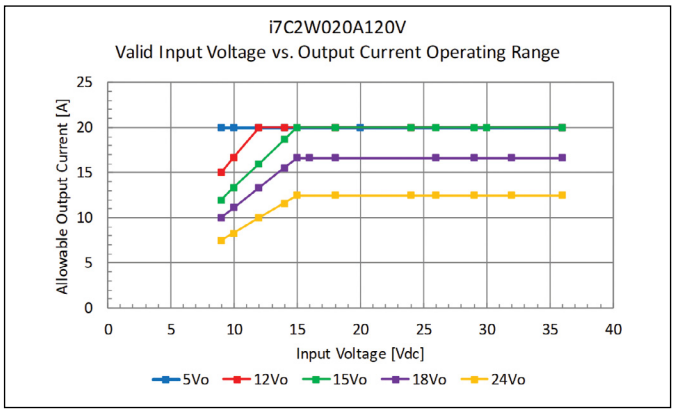


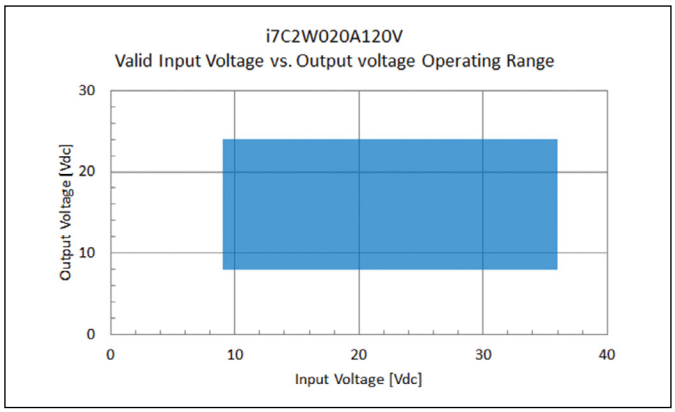


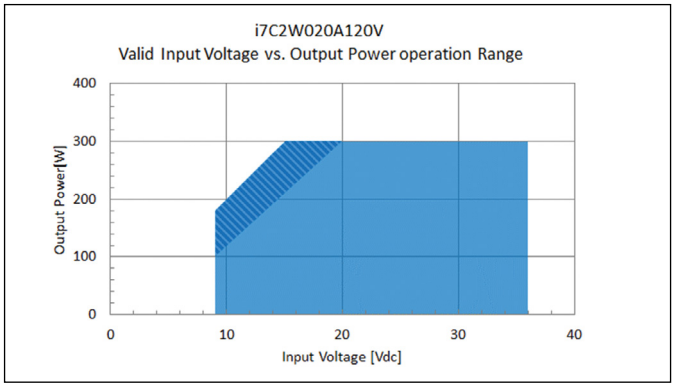


Wider output regulation tolerance (dark blue shaded region) expected during step-up/boost Operation when Vin < 20V, Pout > 100W.
See i7C2W Specifications for related load regulation charts.

## Mechanical Specification

### Openframe - 00x-R Series (i7C4W)

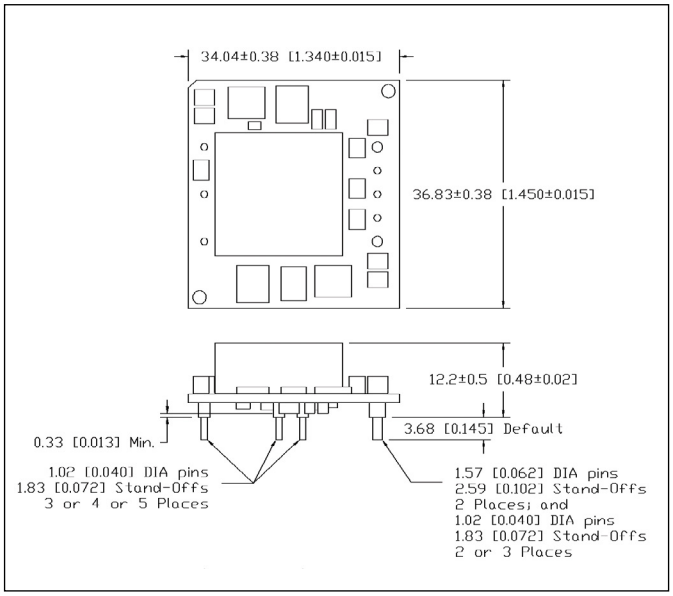


### Openframe - 00x-R Series (i7C2W)

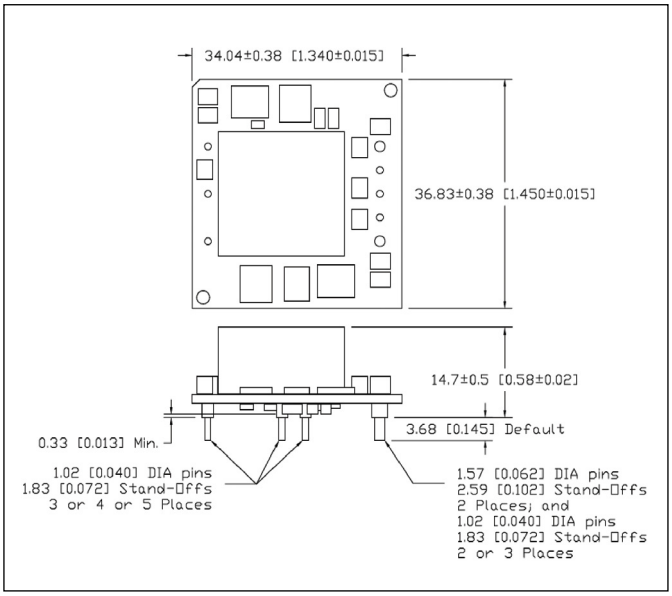

## Mechanical Specification

### Baseplate - xCx-R Series (i7C4W)

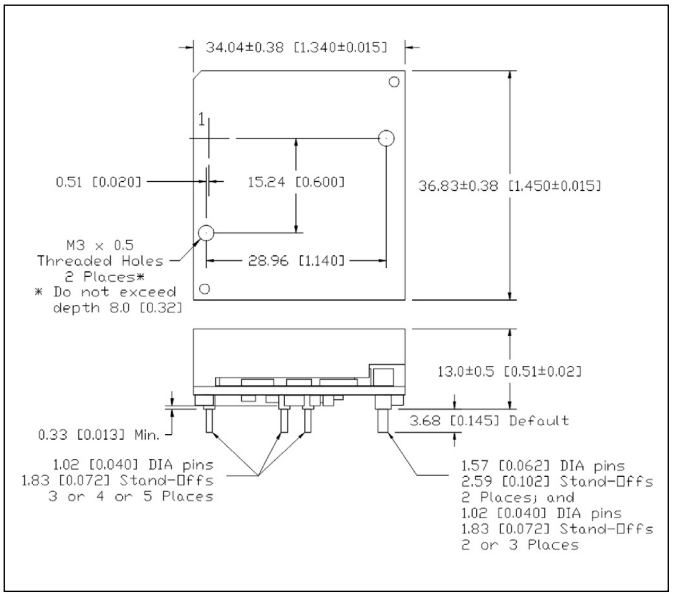


### Heatsink - xFx-R Series (i7C4W)

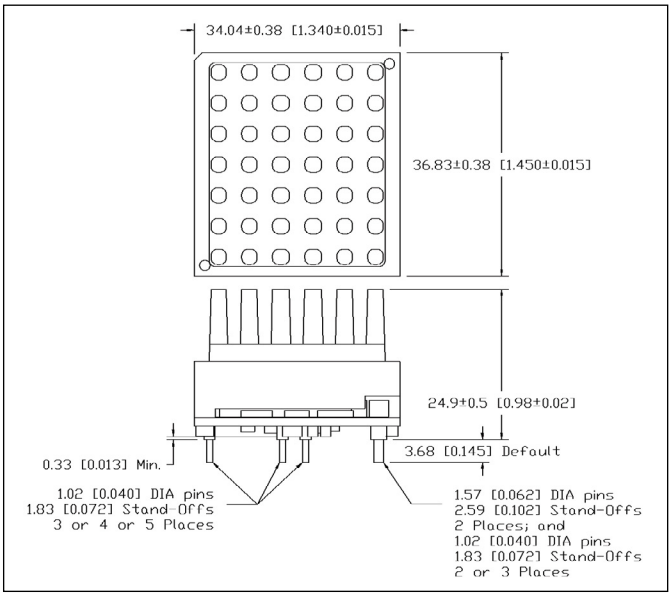


### Mechanical Pin-Out / Spacing

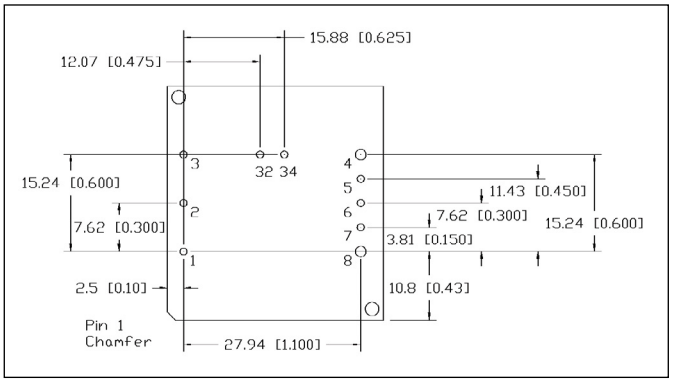


### Pinout

| PIN | Function | PIN | Function |
|---|---|---|---|
| 1 | VIN (+) | 6 | TRIM |
| 2 | ON / OFF | 7 | SENSE (+) |
| 3 | VIN (-) / GND | 8 | VOUT (+) |
| 4 | VOUT (-) / GND | 32 | Sync (Option) |
| 5 | PWR GOOD (Option) | 34 | Current Monitor (Option) |

### Recommended Hole Pattern – STANDARD – xx1-R

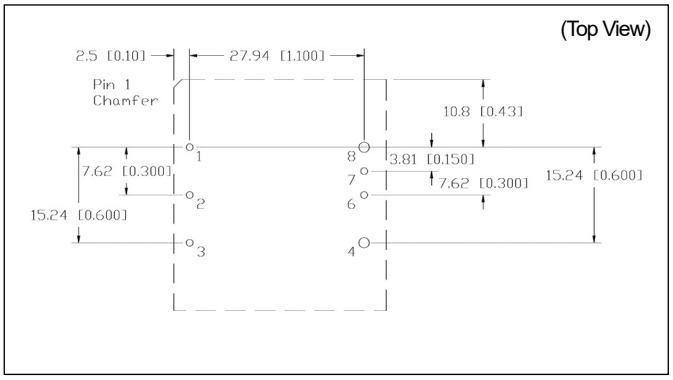


### Recommended Hole Pattern – FULL FEATURE – xx2-R / -xx3-R

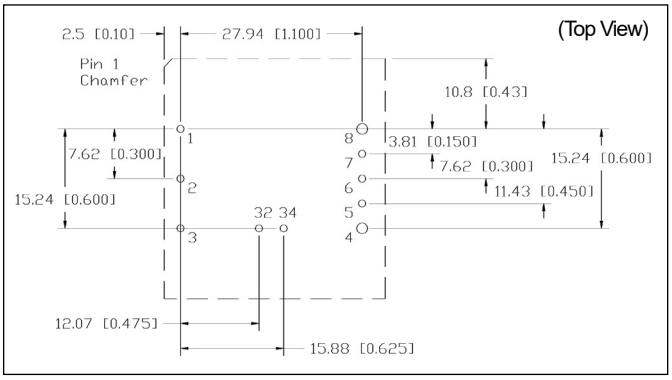



**TDK-Lambda France SAS**
Tel: +33 1 60 12 71 65
france@fr.tdk-lambda.com
www.emea.lambda.tdk.com/fr



**Italy Sales Office**
Tel: +39 02 61 29 38 63
info.italia@it.tdk-lambda.com
www.emea.lambda.tdk.com/it



**Netherlands**
info@nl.tdk-lambda.com
www.emea.lambda.tdk.com/nl



**TDK-Lambda Germany GmbH**
Tel: +49 7841 666 0
info.germany@de.tdk-lambda.com
www.emea.lambda.tdk.com/de



**Austria Sales Office**
Tel: +43 2256 655 84
info@at.tdk-lambda.com
www.emea.lambda.tdk.com/at



**Switzerland Sales Office**
Tel: +41 44 850 53 53
info@ch.tdk-lambda.com
www.emea.lambda.tdk.com/ch



**Nordic Sales Office**
Tel: +45 8853 8086
info@dk.tdk-lambda.com
www.emea.lambda.tdk.com/dk

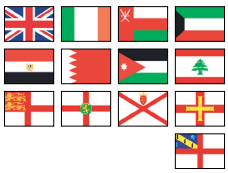

**TDK-Lambda UK Ltd.**
Tel: +44 (0) 12 71 85 66 66
powersolutions@uk.tdk-lambda.com
www.emea.lambda.tdk.com/uk



**TDK-Lambda Ltd.**
Tel: +9 723 902 4333
info@tdk-lambda.co.il
www.emea.lambda.tdk.com/il



**C.I.S.**
**Commercial Support:**
Tel: +7 (495) 665 2627
**Technical Support:**
Tel: +7 (812) 658 0463
info@tdk-lambda.ru
www.emea.lambda.tdk.com/ru



**TDK-Lambda Americas**
Tel: +1 800-LAMBDA-4 or 1-800-526-2324
powersolutions@us.tdk-lambda.com
www.us.lambda.tdk.com



**TDK Electronics do Brasil Ltda**
Tel: +55 11 3289-9599
sales.br@tdk-electronics.tdk.com
www.tdk-electronics.tdk.com/en



**TDK-Lambda Corporation**
Tel: +81-3-6778-1113
www.jp.lambda.tdk.com



**TDK-Lambda (China) Electronics Co. Ltd.**
Tel: +86 21 6485-0777
powersolutions@cn.tdk-lambda.com
www.lambda.tdk.com.cn



**TDK-Lambda Singapore Pte Ltd.**
Tel: +65 6251 7211
tls.mkt@sg.tdk-lambda.com
www.sg.lambda.tdk.com



**TDK India Private Limited, Power Supply Division**
Tel: +91 80 4039-0660
mathew.philip@in.tdk-lambda.com
www.sg.lambda.tdk.com

For Additional Information, please visit
https://product.tdk.com/en/power/