PH SERIES Single Output, DC/DC Converter 50W-600W



■ Features

- Conduction cooling
- High efficiency
- High power density: 61.6W/inch^3 (600W type)
- Full-function model (F type)
  N+1 parallel redundancy operation
  Current sharing (load current balance)
  IOG (inverter operation monitoring signal)
  AUX (AUX-BIAS power output)
- Internal capacitor
  PH50-150/300F: Aluminum electrolytic (output smoothing), ceramic
  PH300S/PH600S: Ceramic capacitor only (high reliability)

■ Model naming method

PH 600 S 280 − 5

- 5 — Nominal output voltage
- 280 — Nominal input voltage
- S — Function (S: Simple function, F: Full function)
- 600 — Output power
- PH — Series name

■ Applications



■ Conformity to RoHS Directive

This means that, in conformity with EU Directive 2002/95/EC, lead, cadmium, mercury, hexavalent chromium, and specific bromine-based flame retardants, PBB and PBDE, have not been used, except for exempted applications.

■ Product Line up

Please see the following page.

PH

Downloaded from Arrow.com.

■ Produce Line up

24V input

Output Voltage	50W		100W		300W	
	Output Current	Model (S)	Output Current	Model (F)	Output Current	Model (F)
2V	—	—	20A	PH100F24-2	—	—
3V	—	—	20A	PH100F24-3	—	—
3.3V	10A	PH50S24-3.3	—	—	—	—
5V	10A	PH50S24-5	20A	PH100F24-5	—	—
12V	4.2A	PH50S24-12	8.4A	PH100F24-12	20A	PH300F24-12
15V	3.4A	PH50S24-15	6.7A	PH100F24-15	—	—
24V	2.1A	PH50S24-24	4.2A	PH100F24-24	—	—
28V	1.8A	PH50S24-28	3.6A	PH100F24-28	10.8A	PH300F24-28

48V input (1)

Output Voltage	50W		75W	
	Output Current	Model (S)	Output Current	Model (F)
2V	—	—	15A	PH75F48-2
3.3V	10A	PH50S48-3.3	15A	PH75F48-3.3
5V	10A	PH50S48-5	15A	PH75F48-5
12V	4.2A	PH50S48-12	6.3A	PH75F48-12
15V	3.4A	PH50S48-15	5A	PH75F48-15
24V	2.1A	PH50S48-24	3.2A	PH75F48-24
28V	1.8A	PH50S48-28	2.7A	PH75F48-28
48V	—	—	—	—

48V input (2)

Output Voltage	75W		100W		150W			300W			
	Output Current	Model (S)	Output Current	Model (S)	Output Current	Model (F)	Model (S)	Output Current	Model (F)	Output Current	Model (S)
2V	15A	—	—	—	30A	PH150F48-2		60A	PH300F48-2		
3.3V	15A	PH75S48-3.3	20A	PH100S48-3.3	30A	PH150F48-3.3	PH150S48-3.3	60A	PH300F48-3		
5V	15A	PH75S48-5	20A	PH100S48-5	30A	PH150F48-5	PH150S48-5	60A	PH300F48-5		
12V	6.3A	PH75S48-12	8.4A	PH100S48-12	12.5A	PH150F48-12	PH150S48-12	25A	PH300F48-12		
15V	5A	PH75S48-15	6.7A	PH100S48-15	10A	PH150F48-15	PH150S48-15	20A	PH300F48-15		
24V	3.2A	PH75S48-24	4.2A	PH100S48-24	6.3A	PH150F48-24	PH150S48-24	12.6A	PH300F48-24		
28V	2.7A	PH75S48-28	3.6A	PH100S48-28	5.4A	PH150F48-28	PH150S48-28	10.8A	PH300F48-28		
48V	—	—	—	—	—	—	—	—	—		

110V input

Output Voltage	50W		75W			150W			300W	
	Output Current	Model (F)	Output Current	Model (F)	Model (S)	Output Current	Model (F)	Model (S)	Output Current	Model (F)
2V	—	—	15A	PH75F110-2	—	30A	PH150F110-2	—	60A	PH300F110-2
3V	—	—	15A	PH75F110-3	—	30A	PH150F110-3	—	60A	PH300F110-3
3.3V	—	—	—	—	—	—	—	—	—	—
5V	10A	PH50S110-5	15A	PH75F110-5	PH75S110-5	30A	PH150F110-5	PH150S110-5	60A	PH300S110-5
12V	4.2A	PH50S110-12	6.3A	PH75F110-12	PH75S110-12	12.5A	PH150F110-12	PH150S110-12	25A	PH300S110-12
15V	3.4A	PH50S110-15	5A	PH75F110-15	PH75S110-15	10A	PH150F110-15	PH150S110-15	20A	PH300S110-15
24V	2.1A	PH50S110-24	3.2A	PH75F110-24	PH75S110-24	6.3A	PH150F110-24	PH150S110-24	12.6A	PH300S110-24
28V	1.8A	PH50S110-28	2.7A	PH75F110-28	PH75S110-28	5.4A	PH150F110-28	PH150S110-28	10.8A	PH300S110-28

280V input (1)

Output Voltage	50W		75W			100W		150W		
	Output Current	Model (S)	Output Current	Model (F)	Model (S)	Output Current	Model (S)	Output Current	Model (F)	Model (S)
2V	—	—	15A	PH75F280-2	—	—	—	30A	PH150F280-2	—
3V	—	—	15A	PH75F280-3	—	—	—	30A	PH150F280-3	—
3.3V	10A	PH50S280-3.3	15A	—	PH75S280-3.3	20A	PH100S280-3.3	30A	—	PH150S280-3.3
5V	10A	PH50S280-5	15A	PH75F280-5	PH75S280-5	20A	PH100S280-5	30A	PH150F280-5	PH150S280-5
12V	4.2A	PH50S280-12	6.3A	PH75F280-12	PH75S280-12	8.4A	PH100S280-12	12.5A	PH150F280-12	PH150S280-12
15V	3.4A	PH50S280-15	5A	PH75F280-15	PH75S280-15	6.7A	PH100S280-15	10A	PH150F280-15	PH150S280-15
24V	2.1A	PH50S280-24	3.2A	PH75F280-24	PH75S280-24	4.2A	PH100S280-24	6.3A	PH150F280-24	PH150S280-24
28V	1.8A	PH50S280-28	2.7A	PH75F280-28	PH75S280-28	3.6A	PH100S280-28	5.4A	PH150F280-28	PH150S280-28
48V	—	—	—	—	—	—	—	—	—	—

280V input (2)

Output Voltage	300W				600W	
	Output Current	Model (F)	Output Current	Model (S)	Output Current	Model (S)
2V	60A	PH300F280-2	—	—	—	—
3V	60A	PH300F280-3	—	—	—	—
3.3V	—	—	50A	PH300S280-3.3	100A	PH600S280-3.3
5V	60A	PH300F280-5	50A	PH300S280-5	100A	PH600S280-5
12V	25A	PH300F280-12	25A	PH300S280-12	50A	PH600S280-12
15V	20A	PH300F280-15	20A	PH300S280-15	40A	PH600S280-15
24V	12.6A	PH300F280-24	12.5A	PH300S280-24	25A	PH600S280-24
28V	10.8A	PH300F280-28	10.8A	PH300S280-28	21.5A	PH600S280-28
48V	—	—	6.3A	PH300S280-280	12.5A	PH600S280-48

• All specifications are subject to change without notice.

Downloaded from Arrow.com.

PH50S24 Specifications

ITEMS/UNITS \ MODEL			PH50S24-3.3	PH50S24-5	PH50S24-12	PH50S24-15	PH50S24-24	PH50S24-28
Input	Voltage Range	V	DC18 - 36					
	Efficiency (typ) (*1)	%	72	80	81	82	83	
	Current (typ) (*1)	A	1.91	2.6	2.59		2.53	
Output	Nominal Voltage	VDC	3.3	5	12	15	24	28
	Maximum Current	A	10		4.2	3.4	2.1	1.8
	Maximum Power	W	33	50	50.4	51	50.4	
	Voltage Setting Accuracy (*1)	%	±1					
	Maximum Line Regulation (*2)	mV	20		48	60	96	112
	Maximum Load Regulation (*3)	mV	40		96	120	192	224
	Temperature Coefficient		0.02%/℃					
	Maximum Ripple & Noise (*9)	mVp-p	100		150		240	280
	Voltage Adjustable Range (*8)		+10%, -10% (At 24VDC input)					
Function	Over Current Protection (*4)		105 - 150%					
	Over Voltage Protection (*5)		165 - 240%	125 - 145%				
	Remote Sensing		—————					
	Remote ON/OFF Control (*8)		Possible (SHORT: ON OPEN: OFF)					
	Parallel Operation		—————					
	Series Operation (*8)		Possible					
Environment	Operating Temperature (*6)	℃	-20 to +85 (Baseplate) Ambient temperature min=-20℃					
	Storage Temperature	℃	-40 to + 85					
	Operating Humidity	%RH	30 - 95 (No dewdrop)					
	Storage Humidity	%RH	10 - 95 (No dewdrop)					
	Vibration		At no operating, 10-55Hz amplitude (sweep for 1min) 0.825mm constant (maximum 49.0m/s²) X, Y, Z 1h each					
	Shock		196.1m/s² (In package)					
	Cooling (*7)		Conduction cooled					
Isolation	Withstand Voltage		Input-Baseplate : 2.5kVAC, Input-Output : 3kVAC (20mA) for 1min, Output-Baseplate : 500VDC for 1min					
	Isolation Resistance		More than 100MΩ at 25℃ and 70%RH Output-Baseplate...500VDC					
Standards	Safety Standards		Approved by UL60950-1, CSA C22.2 No.60950-1, EN60950-1					
Mechanical	Weight (typ)	g	100					
	Size (W x H x D)	mm	41 x 12.7 x 86 (Refer to outline drawing)					

(*1) At 24VDC and maximum output current.
(*2) 18 - 36 VDC, constant load.
(*3) No load - full load, constant input voltage.
(*4) Constant current limiting with automatic recovery.
(*5) Inverter shutdown method, manual reset.
(*6) Ratings - Refer to derating curve below.
- Load(%) is percent of maximum output current.
(*7) Heatsink has to be chosen according to instruction manual.
(*8) Refer to instruction manual.
(*9) External components are needed for operation.
(Refer to basic connection and instruction manual.)

Derating Curve

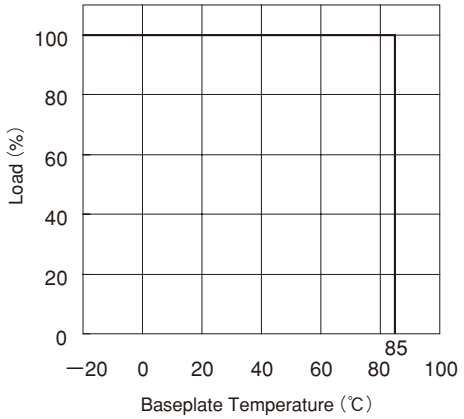

Downloaded from Arrow.com.

PH100F24 Specifications

ITEMS/UNITS \ MODEL			PH100F24-2	PH100F24-3	PH100F24-5	PH100F24-12	PH100F24-15	PH100F24-24	PH100F24-28
Input	Voltage Range	V	DC18 - 36						
	Efficiency (typ) (*1)	%	66	70	80	81	82	83	
	Current (typ) (*1)	A	2.53	3.57	5.21	5.19	5.11	5.06	
Output	Nominal Voltage	VDC	2	3	5	12	15	24	28
	Maximum Current	A	20			8.4	6.7	4.2	3.6
	Maximum Power	W	40	60	100	100.8	100.5	100.8	
	Voltage Setting Accuracy (*1)	%	±1%						
	Maximum Line Regulation (*2)	mV	20			48	60	96	112
	Maximum Load Regulation (*3)	mV	40			96	120	192	224
	Temperature Coefficient		0.02% / ℃						
	Maximum Ripple & Noise (*9)	mVp-p	100			150		240	280
	Voltage Adjustable Range (*10)		±20%		+20%, -60%				
Function	Over Current Protection (*4)		105% - 140%						
	Over Voltage Protection (*5)		165% - 240%		125% - 145%				
	Remote Sensing (*8)		Possible						
	Remote ON/OFF Control (*8)		Possible (SHORT: ON OPEN: OFF)						
	Parallel Operation (*8)		Possible						
	Series Operation (*8)		Possible						
	I.O.G. Signal (*8)		Possible (Open collector output)						
Environment	Operating Temperature (*6)	℃	- 20 to + 85 (Baseplate) ambient temperature MIN = - 20						
	Storage Temperature	℃	- 40 to + 85						
	Operating Humidity	%RH	30 - 95 (No dewdrop)						
	Storage Humidity	%RH	10 - 95 (No dewdrop)						
	Vibration		At no operating, 10-55Hz (sweep for 1min) Amplitude 0.825mm constant (maximum 49.0m/s²) X, Y, Z 1h each						
	Shock		196.1m/s² (In package)						
	Cooling (*7)		Conduction cooled						
Isolation	Withstand Voltage		Input-Baseplate : 2kVAC, Input-Output : 2kVAC (20mA) for 1min Output-Baseplate : 500VDC (100mA) for 1min						
	Isolation Resistance		More than 100Mohm at 25℃ and 70%RH Output-Baseplate...500VDC						
Standards	Safety Standards		Approved by UL60950-1, CSA C22.2 No.60950-1, EN60950-1						
Mechanical	Weight (typ)	g	180						
	Size (W x H x D)	mm	83 x 12.7 x 86 (Refer to outline drawing)						

(*1) At 24VDC and maximum output current.
(*2) 18 - 36VDC, constant load.
(*3) No load - full load, constant input voltage.
(*4) Constant current limiting with automatic recovery.
(*5) Inverter shutdown method, manual reset.
(*6) Ratings - Refer to derating curve below.
- Load(%) is percent of maximum output current.
(*7) Heatsink has to be chosen according to instruction manual.
(*8) Refer to instruction manual.
(*9) External components are needed for operation.
(Refer to basical connection and instruction manual.)
(*10) At 24VDC input.(Refer to instruction manual.)

Derating Curve

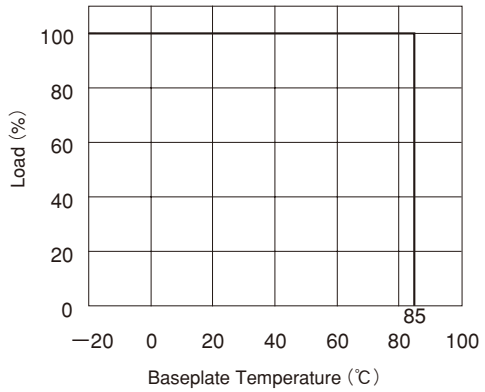

• All specifications are subject to change without notice.
Downloaded from Arrow.com.

PH300F24 Specifications

ITEMS/UNITS \ MODEL			PH300F24-12	PH300F24-28
Input	Voltage Range	V	DC18 - 36	
	Efficiency (typ) (*1)	%	83	84
	Current (typ) (*1)	A	12	15
Output	Nominal Voltage	VDC	12	28
	Maximum Current	A	20	10.8
	Maximum Power	W	240	302.4
	Voltage Setting Accuracy (*1)	%	±1	
	Maximum Line Regulation (*2)	mV	48	112
	Maximum Load Regulation (*3)	mV	96	224
	Temperature Coefficient		0.02%/℃	
	Maximum Ripple & Noise (*9)	mVp-p	150	280
	Voltage Adjustable Range (*10)		+20%, -60%	
Function	Over Current Protection (*4)		105% - 140%	
	Over Voltage Protection (*5)		125% - 145%	
	Remote Sensing (*8)		Possible	
	Remote ON/OFF Control (*8)		Possible (SHORT: ON OPEN: OFF)	
	Parallel Operation (*8)		Possible	
	Series Operation (*8)		Possible	
	I.O.G. Signal (*8)		Possible (Open collector output)	
	AUX-BIAS Power Supply		7 - 10V, 10mA max.	
Environment	Operating Temperature (*6)	℃	-20 to +85 (Baseplate) Ambient temperature min=-20	
	Storage Temperature	℃	-40 to +85	
	Operating Humidity	%RH	30 - 95 (No dewdrop)	
	Storage Humidity	%RH	10 - 95 (No dewdrop)	
	Vibration		At no operating, 10-55Hz (sweep for 1min) Amplitude 0.825mm constant (maximum 49.0m/s²) X, Y, Z 1h each	
	Shock		196.1m/s² (In package)	
	Cooling (*7)		Conduction cooled	
Isolation	Withstand Voltage		Input-Baseplate : 2kVAC, Input-Output : 2kVAC(20mA) for 1min Output-Baseplate : 500VDC for 1min	
	Isolation Resistance		More than 100MΩ at 25℃ and 70%RH Output-Baseplate...500VDC	
Standards	Safety Standards		Approved by UL60950-1, CSA C22.2 No.60950-1, EN60950-1	
Mechanical	Weight (typ)	g	250	
	Size (W x H x D)	mm	146 x 12.7 x 86 (Refer to outline drawing)	

(*1) At 24VDC and maximum output current.

(*2)18 - 36VDC, constant load.

(*3) No load - full load, constant input voltage.

(*4) Constant current limiting with automatic recovery.

(*5) Inverter shutdown method, manual reset.

(*6) Ratings - Refer to derating curve below.
- Load(%) is percent of maximum output current.

(*7) Heatsink has to be chosen according to instruction manual.

(*8) Refer to instruction manual.

(*9) External components are needed for operation.
(Refer to basic connection and instruction manual.)

(*10) At 24VDC Input. (Refer to instruction manual.)

Derating Curve

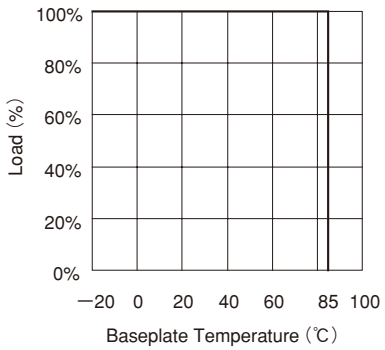

Downloaded from Arrow.com.

PH50S48 Specifications

ITEMS/UNITS \ MODEL			PH50S48-3.3	PH50S48-5	PH50S48-12	PH50S48-15	PH50S48-24	PH50S48-28
Input	Voltage Range	V	DC36 - 76					
	Efficiency (typ) (*1)	%	72	80	82	83	84	
	Current (typ) (*1)	A	0.95	1.30	1.28		1.25	
Output	Nominal Voltage	VDC	3.3	5	12	15	24	28
	Maximum Current	A	10		4.2	3.4	2.1	1.8
	Maximum Power	W	33	50	50.4	51	50.4	
	Voltage Setting Accuracy (*1)	%	±1					
	Maximum Line Regulation (*2)	mV	20		48	60	96	112
	Maximum Load Regulation (*3)	mV	40		96	120	192	224
	Temperature Coefficient		0.02%/℃					
	Maximum Ripple & Noise (*9)	mVp-p	100		150		240	280
	Voltage Adjustable Range(*8)		+10%, -10% (At 48VDC Input)					
Function	Over Current Protection (*4)		105 - 150%					
	Over Voltage Protection (*5)		165 - 240%	125 - 145%				
	Remote Sensing		—————					
	Remote ON/OFF Control (*8)		Possible (SHORT: ON OPEN: OFF)					
	Parallel Operation		—————					
	Series Operation (*8)		Possible					
Environment	Operating Temperature (*6)	℃	-20 to +85 (Baseplate) Ambient temperature min=-20					
	Storage Temperature	℃	-40 to + 85					
	Operating Humidity	%RH	30 - 95 (No dewdrop)					
	Storage Humidity	%RH	10 - 95 (No dewdrop)					
	Vibration		0.825mm constant (maximum 49.0m/s²) X, Y, Z 1h each					
	Shock		196.1m/s² (In package)					
	Cooling (*7)		Conduction cooled					
Isolation	Withstand Voltage		Input-Baseplate : 2.5kVAC, Input-Output : 3kVAC (20mA) for 1min, Output-Baseplate : 500VDC for 1min					
	Isolation Resistance		More than 100MΩ at 25℃ and 70%RH Output-Baseplate...500VDC					
Standards	Safety Standards		Approved by UL60950-1, CSA C22.2 No.60950-1, EN60950-1					
Mechanical	Weight (typ)	g	100					
	Size (W x H x D)	mm	41 x 12.7 x 86 (Refer to outline drawing)					

(*1) At 48VDC and maximum output current.
(*2) 36 - 76 VDC, constant load.
(*3) No load - full load, constant input voltage.
(*4) Constant current limiting with automatic recovery.
(*5) Inverter shutdown method, manual reset.
(*6) Ratings - Refer to derating curve below.
- Load(%) is percent of maximum output current.
(*7) Heatsink has to be chosen according to instruction manual.
(*8) Refer to instruction manual.
(*9) External components are needed for operation.
(Refer to basic connection and instruction manual.)

Derating Curve

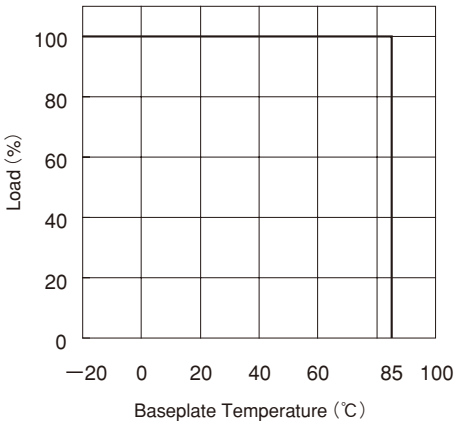

• All specifications are subject to change without notice.
Downloaded from Arrow.com.

PH75S48 Specifications

ITEMS/UNITS			MODEL	PH75S48-3.3	PH75S48-5	PH75S48-12	PH75S48-15	PH75S48-24	PH75S48-28
Input	Voltage Range		V	DC36 - 76					
	Efficiency (typ)	(*1)	%	72	81	83	84	85	
	Current (typ)	(*1)	A	1.43	1.93	1.9	1.86	1.88	1.85
Output	Nominal Voltage		VDC	3.3	5	12	15	24	28
	Maximum Current		A	15		6.3	5	3.2	2.7
	Maximum Power		W	49.5	75	75.6	75	76.8	75.6
	Voltage Setting Accuracy	(*1)	%	±1					
	Maximum Line Regulation	(*2)	mV	20		48	60	96	112
	Maximum Load Regulation	(*3)	mV	40		96	120	192	224
	Temperature Coefficient			0.02%/℃					
	Maximum Ripple & Noise	(*9)	mVp-p	100		150		240	280
	Voltage Adjustable Range	(*8)		+10%, -10% (At 48VDC Input)					
Function	Over Current Protection	(*4)		105 - 150%					
	Over Voltage Protection	(*5)		165 - 240%	125 - 145%				
	Remote Sensing			—————					
	Remote ON/OFF Control	(*8)		Possible (SHORT: ON OPEN: OFF)					
	Parallel Operation			—————					
	Series Operation	(*8)		Possible					
Environment	Operating Temperature	(*6)	℃	-20 to +85 (Baseplate) Ambient temperature min=-20					
	Storage Temperature		℃	-40 to + 85					
	Operating Humidity		%RH	30 - 95 (No dewdrop)					
	Storage Humidity		%RH	10 - 95 (No dewdrop)					
	Vibration			At no operating, 10-55Hz amplitude (sweep for 1min) 0.825mm constant (maximum 49.0m/s²) X, Y, Z 1h each					
	Shock			196.1m/s² (In package)					
	Cooling	(*7)		Conduction cooled					
Isolation	Withstand Voltage			Input-Baseplate : 2.5kVAC, Input-Output : 3kVAC (20mA) for 1min, Output-Baseplate : 500VDC for 1min					
	Isolation Resistance			More than 100MΩ at 25℃ and 70%RH Output-Baseplate...500VDC					
Standards	Safety Standards			Approved by UL60950-1, CSA C22.2 No.60950-1, EN60950-1					
Mechanical	Weight (typ)		g	100					
	Size (W x H x D)		mm	41 x 12.7 x 86 (Refer to outline drawing)					

(*1) At 48VDC and maximum output current.
(*2) 36 - 76 VDC, constant load.
(*3) No load - full load, constant input voltage.
(*4) Constant current limiting with automatic recovery.
(*5) Inverter shutdown method, manual reset.
(*6) Ratings - Refer to derating curve below.
- Load(%) is percent of maximum output current.
(*7) Heatsink has to be chosen according to instruction manual.
(*8) Refer to instruction manual.
(*9) External components are needed for operation.
(Refer to basic connection and instruction manual.)

Derating Curve

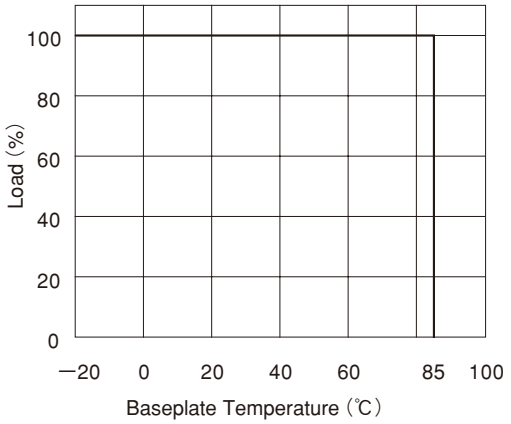

Downloaded from Arrow.com.

PH75F48 Specifications

ITEMS/UNITS \ MODEL			PH75F48-2	PH75F48-3	PH75F48-5	PH75F48-12	PH75F48-15	PH75F48-24	PH75F48-28
Input	Voltage Range	V	DC36 - 76						
	Efficiency (typ) (*1)	%	66	70	81	83	84	85	
	Current (typ) (*1)	A	0.95	1.34	1.93	1.90	1.86	1.88	1.85
Output	Nominal Voltage	VDC	2	3	5	12	15	24	28
	Maximum Current	A	15			6.3	5	3.2	2.7
	Maximum Power	W	30	45	75	75.6	75	76.8	75.6
	Voltage Setting Accuracy (*1)	%	±1						
	Maximum Line Regulation (*2)	mV	20			48	60	96	112
	Maximum Load Regulation (*3)	mV	40			96	120	192	224
	Temperature Coefficient		0.02%/℃						
	Maximum Ripple & Noise (*9)	mVp-p	100			150		240	280
	Voltage Adjustable Range (*10)		±20%		+20%, -60%				
Function	Over Current Protection (*4)		105% - 140%						
	Over Voltage Protection (*5)		165% - 240%		125% - 145%				
	Remote Sensing (*8)		Possible						
	Remote ON/OFF Control (*8)		Possible (SHORT: ON OPEN: OFF)						
	Parallel Operation (*8)		Possible						
	Series Operation (*8)		Possible						
	I.O.G. Signal (*8)		Possible (Open collector output)						
Environment	Operating Temperature (*6)	℃	-20 to +85(Baseplate) Ambient temperature min=-20						
	Storage Temperature	℃	-40 to +100						
	Operating Humidity	%RH	30 - 95 (No dewdrop)						
	Storage Humidity	%RH	10 - 95 (No dewdrop)						
	Vibration		At no operating, 10-55Hz amplitude (sweep for 1min) 0.825mm constant (maximum 49.0m/s²) X, Y, Z 1h each						
	Shock		196.1m/s² (In package)						
	Cooling (*7)		Conduction cooled						
Isolation	Withstand Voltage		Input-Baseplate : 2.5kVAC, Input-Output : 3kVAC(20mA) for 1min Output-Baseplate : 500VDC for 1min						
	Isolation Resistance		More than 100MΩ at 25℃ and 70%RH Output-Baseplate...500VDC						
Standards	Safety Standards		Approved by UL60950-1, CSA C22.2 No.60950-1, EN60950						
Mechanical	Weight (typ)	g	150						
	Size (W x H x D)	mm	62 x 12.7 x 86 (Refer to outline drawing)						

(*1) At 48VDC and maximum output current.
(*2) 36 - 76VDC, constant load.
(*3) No load - full load, constant input voltage.
(*4) Constant current limiting with automatic recovery.
(*5) Inverter shutdown method, manual reset.
(*6) Ratings - Refer to derating curve below.
- Load(%) is percent of maximum output current.
(*7) Heatsink has to be chosen according to instruction manual.
(*8) Refer to instruction manual.
(*9) External components are needed for operation.
(Refer to basic connection and instruction manual.)
(*10) At 48VDC Input. (Refer to instruction manual.)

Derating Curve

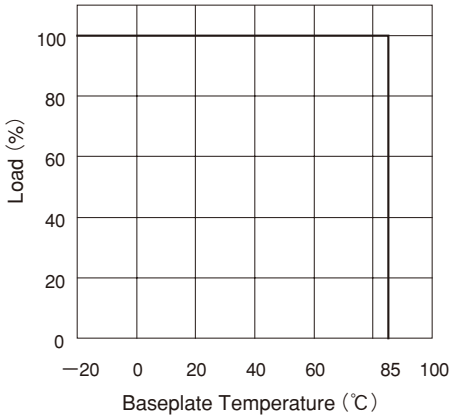

• All specifications are subject to change without notice.

Downloaded from Arrow.com.

PH100S48 Specifications

ITEMS/UNITS		MODEL	PH100S48-3.3	PH100S48-5	PH100S48-12	PH100S48-15	PH100S48-24	PH100S48-28
Input	Voltage Range	V	DC36 - 76					
	Efficiency (typ) (*1)	%	74	81	83	84	85	
	Current (typ) (*1)	A	1.86	2.57	2.53	2.49	2.47	
Output	Nominal Voltage	VDC	3.3	5	12	15	24	28
	Maximum Current	A	20		8.4	6.7	4.2	3.6
	Maximum Power	W	66	100	100.8	100.5	100.8	
	Voltage Setting Accuracy (*1)	%	±1					
	Maximum Line Regulation (*2)	mV	20		48	60	96	112
	Maximum Load Regulation (*3)	mV	40		96	120	192	224
	Temperature Coefficient		0.02%/℃					
	Maximum Ripple & Noise (*9)	mVp-p	100		150		240	280
	Voltage Adjustable Range (*8)		+10%, -10% (At 48VDC Input)					
Function	Over Current Protection (*4)		105 - 150%					
	Over Voltage Protection (*5)		165 - 240%	125 - 145%				
	Remote Sensing		Possible					
	Remote ON/OFF Control (*8)		Possible (SHORT: ON OPEN: OFF)					
	Parallel Operation		—————					
	Series Operation (*8)		Possible					
Environment	Operating Temperature (*6)	℃	-20 to +85 (Baseplate) Ambient temperature min=-20					
	Storage Temperature	℃	-40 to + 85					
	Operating Humidity	%RH	30 - 95 (No dewdrop)					
	Storage Humidity	%RH	10 - 95 (No dewdrop)					
	Vibration		At no operating, 10-55Hz amplitude (sweep for 1min) 0.825mm constant (maximum 49.0m/s²) X, Y, Z 1h each					
	Shock		196.1m/s² (In package)					
	Cooling (*7)		Conduction cooled					
Isolation	Withstand Voltage		Input-Baseplate : 2.5kVAC, Input-Output : 3kVAC(20mA) for 1min Output-Baseplate : 500VDC for 1min					
	Isolation Resistance		More than 100MΩ at 25℃ and 70%RH Output-Baseplate...500VDC					
Standards	Safety Standards		Approved by UL60950-1, CSA C22.2 No.60950-1, EN60950-1					
Mechanical	Weight (typ)	g	150					
	Size (W x H x D)	mm	62 x 12.7 x 86 (Refer to outline drawing)					

(*1) At 48VDC and maximum output current.
(*2) 36 - 76 VDC, constant load.
(*3) No load - full load, constant input voltage.
(*4) Constant current limiting with automatic recovery.
(*5) Inverter shutdown method, manual reset.
(*6) Ratings - Refer to derating curve below.
- Load(%) is percent of maximum output current.
(*7) Heatsink has to be chosen according to instruction manual.
(*8) Refer to instruction manual.
(*9) External components are needed for operation.
(Refer to basic connection and instruction manual.)

Derating Curve

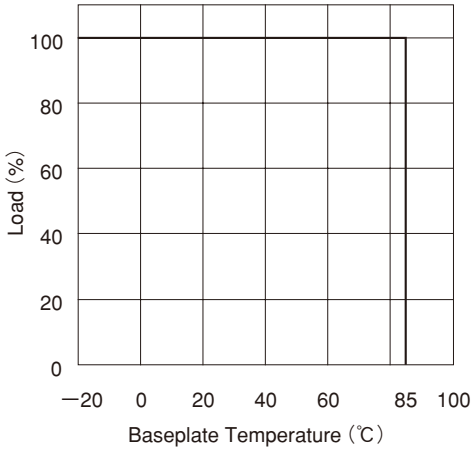

Downloaded from Arrow.com.

PH150S48 Specifications

ITEMS/UNITS		MODEL	PH150S48-3.3	PH150S48-5	PH150S48-12	PH150S48-15	PH150S48-24	PH150S48-28
Input	Voltage Range	V	D36 - 76					
	Efficiency (typ) (*1)	%	72	82	85		88	
	Current (typ) (*1)	A	2.75	3.81	3.68		3.58	
Output	Nominal Voltage	VDC	3.3	5	12	15	24	28
	Maximum Current	A	30		12.5	10	6.3	5.4
	Maximum Power	W	99	150			151.2	
	Voltage Setting Accuracy (*1)	%	±1					
	Maximum Line Regulation (*2)	mV	20		48	60	96	112
	Maximum Load Regulation (*3)	mV	40		96	120	192	224
	Temperature Coefficient		0.02%/℃					
	Maximum Ripple & Noise (*9)	mVp-p	100		150		240	280
	Voltage Adjustable Range (*8)		+10%, -10% (At 48VDC Input)					
Function	Over Current Protection (*4)		105 - 150%					
	Over Voltage Protection (*5)		165 - 240%	125 - 145%				
	Remote Sensing		Possible					
	Remote ON/OFF Control (*8)		Possible (SHORT: ON OPEN: OFF)					
	Parallel Operation		—————					
	Series Operation (*8)		Possible					
Environment	Operating Temperature (*6)	℃	-20 to +85 (Baseplate) Ambient temperature min=-20					
	Storage Temperature	℃	-40 to + 85					
	Operating Humidity	%RH	30 - 95 (No dewdrop)					
	Storage Humidity	%RH	10 - 95 (No dewdrop)					
	Vibration		At no operating, 10-55Hz amplitude (sweep for 1min) 0.825mm constant (maximum 49.0m/s²) X, Y, Z 1h each					
	Shock		196.1m/s² (In package)					
	Cooling (*7)		Conduction cooled					
Isolation	Withstand Voltage		Input-Baseplate : 2.5kVAC, Input-Output : 3kVAC (20mA) for 1min Output-Baseplate : 500VDC for 1min					
	Isolation Resistance		More than 100MΩ at 25℃ and 70%RH Output-Baseplate...500VDC					
Standards	Safety Standards		Approved by UL60950-1, CSA C22.2 No.60950-1, EN60950-1					
Mechanical	Weight (typ)	g	150					
	Size (W x H x D)	mm	72 x 12.7 x 86 (Refer to outline drawing)					

(*1) At 48VDC and maximum output current.
(*2) 36 - 76 VDC, constant Load.
(*3) No load - full load, constant input voltage.
(*4) Constant current limiting with automatic recovery.
(*5) Inverter shutdown method, manual reset.
(*6) Ratings - Refer to derating curve below.
- Load(%) is percent of maximum output current.
(*7) Heatsink has to be chosen according to instruction manual.
(*8) Refer to instruction manual.
(*9) External components are needed for operation.
(Refer to basic connection and Instruction manual.)

Derating Curve

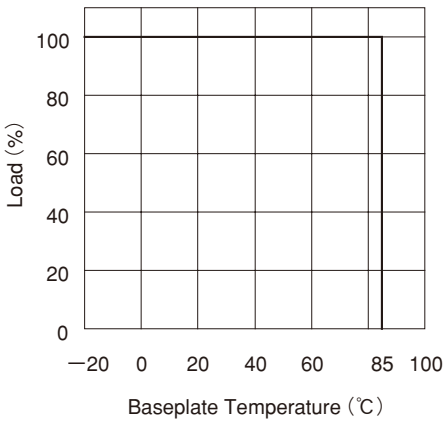

• All specifications are subject to change without notice.
Downloaded from Arrow.com.

PH150F48 Specifications

ITEMS/UNITS		MODEL	PH150F48-2	PH150F48-3	PH150F48-5	PH150F48-12	PH150F48-15	PH150F48-24	PH150F48-28
Input	Voltage Range	V	DC36 - 76						
	Efficiency (typ) (*1)	%	68	73	82	86	87	89	90
	Current (typ) (*1)	A	1.84	2.57	3.81	3.55	3.59	3.54	3.5
Output	Nominal Voltage	VDC	2	3	5	12	15	24	28
	Maximum Current	A	30			12.5	10	6.3	5.4
	Maximum Power	W	60	90	150			151.2	
	Voltage Setting Accuracy (*1)	%	±1						
	Maximum Line Regulation (*2)	mV	20			48	60	96	112
	Maximum Load Regulation (*3)	mV	40			96	120	192	224
	Temperature Coefficient		0.02%/℃						
	Maximum Ripple & Noise (*9)	mVp-p	100			150		240	280
	Voltage Adjustable Range (*10)		±20%		+20%, -60%				
Function	Over Current Protection (*4)		105% - 140%						
	Over Voltage Protection (*5)		165% - 240%		125% - 145%				
	Remote Sensing (*8)		Possible						
	Remote ON/OFF Control (*8)		Possible (SHORT: ON OPEN: OFF)						
	Parallel Operation (*8)		Possible						
	Series Operation (*8)		Possible						
	I.O.G. Signal (*8)		Possible (Open collector output)						
Environment	Operating Temperature (*6)	℃	- 20 to 85 (Baseplate) Ambient temperature MIN = -20						
	Storage Temperature	℃	-40 to + 85						
	Operating Humidity	%RH	30 - 95 (No dewdrop)						
	Storage Humidity	%RH	10 - 95 (No dewdrop)						
	Vibration		At no operating, 10-55Hz (sweep for 1min) Amplitude 0.825mm constant (maximum 49.0m/s²) X, Y, Z 1h each						
	Shock		196.1m/s² (In package)						
	Cooling (*7)		Conduction cooled						
Isolation	Withstand Voltage		Input-Baseplate : 2.5kVAC, Input-Output : 3kVAC(20mA) for 1min Output-Baseplate : 500VDC for 1min						
	Isolation Resistance		More than 100MΩ at 25℃ and 70%RH Output-Baseplate...500VDC						
Standards	Safety Standards		Approved by UL60950-1, CSA C22.2 No.60950-1, EN60950-1						
Mechanical	Weight (typ)	g	180						
	Size (W x H x D)	mm	83 x 12.7 x 86 (Refer to outline drawing)						

(*1) At 48VDC and maximum output current.
(*2) 36 - 76 VDC, constant load.
(*3) No load - full load, constant input voltage.
(*4) Constant current limiting with automatic recovery.
(*5) Inverter shutdown method, manual reset.
(*6) Ratings - Refer to derating curve below.
- Load(%) is percent of maximum output current.
(*7) Heatsink has to be chosen according to instruction manual.
(*8) Refer to instruction manual.
(*9) External components are needed for operation.
(Refer to basic connection and instruction manual.)

Derating Curve

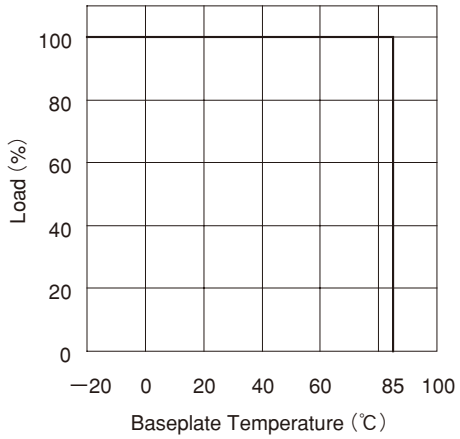

Downloaded from Arrow.com.

PH300S48 Specifications

ITEMS/UNITS			MODEL	PH300S48-3.3	PH300S48-5	PH300S48-12	PH300S48-15	PH300S48-24	PH300S48-28	PH300S48-48
Input	Voltage Range		V	DC36 - 76						
	Efficiency (typ)	(*1)	%	80	84	88				
	Current (typ)	(*1)	A	4.30	6.20	7.10			7.16	
Output	Nominal Voltage		V	3.3	5	12	15	24	28	48
	Maximum Current		A	50		25	20	12.5	10.8	6.3
	Maximum Power		W	165	250	300			302.4	
	Voltage Setting Accuracy	(*1)	%	±1						
	Maximum Line Regulation	(*2)	mV	20		48	60	96	112	192
	Maximum Load Regulation	(*3)	mV	40		96	120	192	224	384
	Temperature Coefficient			0.02%/℃						
	Maximum Ripple & Noise (0~+100℃)	(*9)	mVp-p	100		150		240	280	480
	Maximum Ripple & Noise (−20~0℃)	(*9)	mVp-p	150		225		360	420	720
	Voltage Adjustable Range	(*10)	%	+20,-10		±10				+20,-10
Function	Over Current Protection	(*4)		105 - 150%						
	Over Voltage Protection	(*5)		140 - 170%	125 - 145%					
	Remote Sensing	(*8)		Possible						
	Remote ON/OFF Control	(*8)		Possible (SHORT: ON OPEN: OFF)						
	Parallel Operation	(*11)		Applicable with CS signal						
	Series Operation	(*8)		Possible						
	I.O.G. Signal	(*8)		Built-in (Open collector output)						
Environment	Operating Temperature	(*6)	℃	-20 to +100(Baseplate), Ambient temperature min -20						
				-20 to +100 : 100%		-20 to +90 : 100% , +100 : 83%				
	Storage Temperature		℃	-40 to + 100						
	Operating Humidity		%RH	30 - 95 (No dewdrop)						
	Storage Humidity		%RH	10 - 95 (No dewdrop)						
	Vibration			At no operating, 10-55Hz (sweep for 1min) Amplitude 0.825mm constant (maximum 49.0m/s²) X, Y, Z 1 h each						
	Shock			196.1m/s²						
	Cooling	(*7)		Conduction cooled						
Isolation	Withstand Voltage			Input-Baseplate : 1.5kVAC, Input-Output : 1.5kVAC(20mA) for 1min Output-Baseplate : 500VDC for 1min						
	Isolation Resistance			More than 100MΩ at 25℃ and 70%RH Output-Baseplate...500VDC						
Standards	Safety Standards			Approved by UL60950-1, CSA C22.2 No.60950-1, EN60950-1						
Mechanical	Weight (typ)		g	200						
	Size (W x H x D)		mm	83 x 12.7 x 86 (Refer to outline drawing)						

(*1) At 48VDC and maximum output current.
(Baseplate temprature = +25℃)

(*2) 36 - 76VDC, constant load.

(*3) No load - full load, constant input voltage.

(*4) Constant current limiting with automatic recovery.

(*5) Inverter shutdown method, manual reset with CNT signal.

(*6) Ratings - Refer to derating curve below.
- Load(%) is percent of maximum output current.

(*7) Heatsink has to be chosen according to instruction manual.

(*8) Refer to instruction manual.

(*9) External components are needed for operation.
(Refer to basic connection and instruction manual.)

(*10) At 48VDC Input. (Refer to instruction manual.)

(*11) External circuit is needed for operation.
(Refer to instruction manual.)

Derating Curve

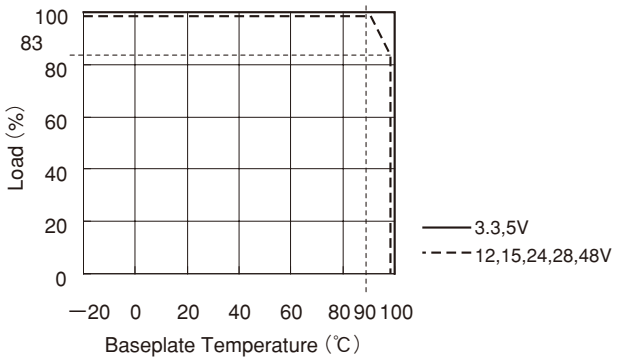

• All specifications are subject to change without notice.

Downloaded from Arrow.com.

PH300F48 Specifications

ITEMS/UNITS \ MODEL			PH300F48-2	PH300F48-3	PH300F48-5	PH300F48-12	PH300F48-15	PH300F48-24	PH300F48-28
Input	Voltage Range	V	DC36 - 76						
	Efficiency (typ) (*1)	%	68	73	82	85	86	89	90
	Current (typ) (*1)	A	3.68	5.14	7.62	7.35	7.26	7.16	7
Output	Nominal Voltage	VDC	2	3	5	12	15	24	28
	Maximum Current	A	60			25	20	12.6	10.8
	Maximum Power	W	120	180	300			302.4	
	Voltage Setting Accuracy (*1)	%	±1						
	Maximum Line Regulation (*2)	mV	20			48	60	96	112
	Maximum Load Regulation (*3)	mV	40			96	120	192	224
	Temperature Coefficient		0.02%/℃						
	Maximum Ripple & Noise (*9)	mVp-p	100			150		240	280
	Voltage Adjustable Range (*10)		±20%		+20%, -60%				
Function	Over Current Protection (*4)		105% - 140%						
	Over Voltage Protection (*5)		165% - 240%		125% - 145%				
	Remote Sensing (*8)		Possible						
	Remote ON/OFF Control (*8)		Possible (SHORT: ON OPEN: OFF)						
	Parallel Operation (*8)		Possible						
	Series Operation (*8)		Possible						
	I.O.G. Signal (*8)		Possible (Open collector output)						
Environment	Operating Temperature (*6)	℃	-20 to 85 (Baseplate) Ambient temperature MIN=20℃						
	Storage Temperature	℃	-40 to 85						
	Operating Humidity	%RH	30 - 95 (No dewdrop)						
	Storage Humidity	%RH	10 - 95 (No dewdrop)						
	Vibration		At no operating, 10-55Hz (sweep for 1min) Amplitude 0.825mm constant (maximum 49.0m/s²) X, Y, Z 1 h each						
	Shock		196.1m/s² (In package)						
	Cooling (*7)		Conduction cooled						
Isolation	Withstand Voltage		Input-Baseplate : 2.5kVAC, Input-Output : 3kVAC(20mA) for 1min Output-Baseplate : 500VDC(100mA) for 1min						
	Isolation Resistance		More than 100MΩ at 25℃ and 70%RH Output-Baseplate...500VDC						
Standards	Safety Standards		Approved by UL60950-1, CSA C22.2 No.60950-1, EN60950-1						
Mechanical	Weight (typ)	g	250						
	Size (W x H x D)	mm	146 x 12.7 x 86 (Refer to outline drawing)						

(*1) At 48VDC and maximum output current.

(*2) 36 - 76VDC, constant load.

(*3) No load - full load, constant input voltage.

(*4) Constant current limiting with automatic recovery.

(*5) Inverter shutdown method, manual reset.

(*6) Ratings - Refer to derating curve below.
- Load(%) is percent of maximum output current.

(*7) Heatsink has to be chosen according to instruction manual.

(*8) Refer to instruction manual.

(*9) External capacitor is required.
(Refer to instruction manual.)

(*10) At 48VDC input. (Refer to instruction manual.)

Derating Curve

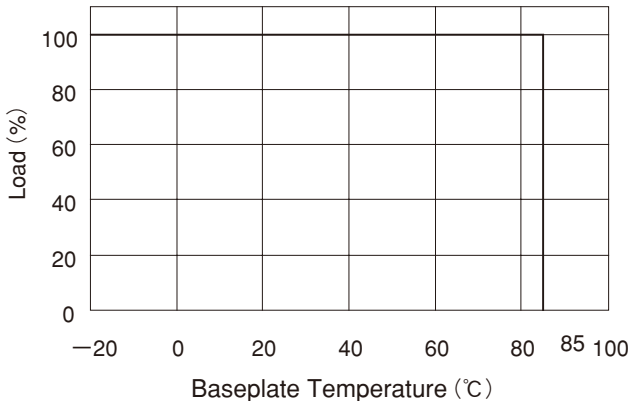

PH

Downloaded from Arrow.com.

PH50S110 Specifications

ITEMS/UNITS \ MODEL			PH50S110-5	PH50S110-12	PH50S110-15	PH50S110-24	PH50S110-28
Input	Voltage Range	V	DC82 - 185				
	Efficiency (typ) (*1)	%	80	82	83	84	
	Current (typ) (*1)	A	0.57	0.56		0.55	
Output	Nominal Voltage	VDC	5	12	15	24	28
	Maximum Current	A	10	4.2	3.4	2.1	1.8
	Maximum Power	W	50	50.4	51	50.4	
	Voltage Setting Accuracy (*1)	%	±1%				
	Maximum Line Regulation (*2)	mV	20	48	60	96	112
	Maximum Load Regulation (*3)	mV	40	96	120	192	224
	Temperature Coefficient		0.02%/℃				
	Maximum Ripple & Noise (*9)	mVp-p	100	150		240	280
	Voltage Adjustable Range (*8)		+10%, -10% (At 110VDC Input)				
Function	Over Current Protection (*4)		105% - 150%				
	Over Voltage Protection (*5)		125% - 145%				
	Remote Sensing		————				
	Remote ON/OFF Control (*8)		Possible (SHORT: ON OPEN: OFF)				
	Parallel Operation		————				
	Series Operation (*8)		Possible				
Environment	Operating Temperature (*6)	℃	-20 to +85 (Baseplate) Ambient temperature min=-20℃				
	Storage Temperature	℃	-40 to +85				
	Operating Humidity	%RH	30 - 95 (No dewdrop)				
	Storage Humidity	%RH	10 - 95 (No dewdrop)				
	Vibration		At no operating, 10-55Hz (sweep for 1min) Amplitude 0.825mm constant (maximum 49.0m/s²) X, Y, Z 1 h each				
	Shock		196.1m/s² (In package)				
	Cooling (*7)		Conduction cooled				
Isolation	Withstand Voltage		Input-Baseplate : 2.5kVAC, Input-Output : 3kVAC(20mA) for 1min Output-Baseplate : 500VDC for 1min				
	Isolation Resistance		More than 100MΩ at 25℃ and 70%RH Output-Baseplate…500VDC				
Standards	Safety Standards		Approved by UL60950-1, CSA C22.2 No.60950-1, EN60950-1				
Mechanical	Weight (typ)	g	100				
	Size (W x H x D)	mm	41 x 12.7 x 86 (Refer to outline drawing)				

(*1) At 110VDC and maximum output current.
(*2) 88 - 185VDC, constant load.
(*3) No load - full load, constant input voltage.
(*4) Constant current limiting with automatic recovery.
(*5) Inverter shutdown method, manual reset.
(*6) Ratings - Refer to derating curve below.
- Load(%) is percent of maximum output current.
(*7) Heatsink has to be chosen according to instruction manual.
(*8) Refer to instruction manual.
(*9) External components are needed for operation.
(Refer to basic connection and instruction manual.)

Derating Curve

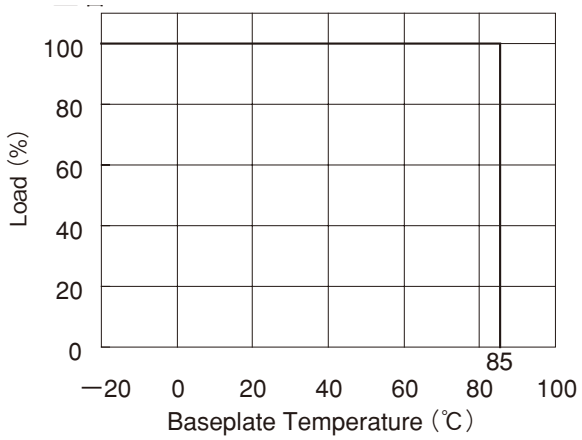

• All specifications are subject to change without notice.
Downloaded from Arrow.com.

PH75S110 Specifications

ITEMS/UNITS		MODEL	PH75S110-5	PH75S110-12	PH75S110-15	PH75S110-24	PH75S110-28
Input	Voltage Range	V	DC82 - 185				
	Efficiency (typ) (*1)	%	81	83	84	85	
	Current (typ) (*1)	A	0.84	0.83	0.81	0.82	0.81
Output	Nominal Voltage	VDC	5	12	15	24	28
	Maximum Current	A	15	6.3	5	3.2	2.7
	Maximum Power	W	75	75.6	75	76.8	75.6
	Voltage Setting Accuracy (*1)	%	±1				
	Maximum Line Regulation (*2)	mV	20	48	60	96	112
	Maximum Load Regulation (*3)	mV	40	96	120	192	224
	Temperature Coefficient		0.02%/℃				
	Maximum Ripple & Noise (*9)	mVp-p	100	150		240	280
	Voltage Adjustable Range (*8)		+10%, -10% (At 110VDC Input)				
Function	Over Current Protection (*4)		105% - 150%				
	Over Voltage Protection (*5)		125% - 145%				
	Remote Sensing		————				
	Remote ON/OFF Control (*8)		Possible (SHORT: ON OPEN: OFF)				
	Parallel Operation		————				
	Series Operation (*8)		Possible				
Environment	Operating Temperature (*6)	℃	-20 to +85 (Baseplate) Ambient temperature min=-20				
	Storage Temperature	℃	-40 to +85				
	Operating Humidity	%RH	30 - 95 (No dewdrop)				
	Storage Humidity	%RH	10 - 95 (No dewdrop)				
	Vibration		At no operating, 10-55Hz (sweep for 1min) Amplitude 0.825mm constant (maximum 49.0m/s²) X, Y, Z 1h each				
	Shock		196.1m/s² (In package)				
	Cooling (*7)		Conduction cooled				
Isolation	Withstand Voltage		Input-Baseplate : 2.5kVAC, Input-Output : 3kVAC(20mA) for 1min Output-Baseplate : 500VDC for 1min				
	Isolation Resistance		More than 100MΩ at 25℃ and 70%RH Output-Baseplate...500VDC				
Standards	Safety Standards		Approved by UL60950-1, CSA C22.2 No.60950-1, EN60950-1				
Mechanical	Weight (typ)	g	100				
	Size (W x H x D)	mm	41 x 12.7 x 86 (Refer to outline drawing)				

(*1) At 110VDC and maximum output current.
(*2) 88 - 185VDC, constant load.
(*3) No load - full load, constant input voltage.
(*4) Constant current limiting with automatic recovery.
(*5) Inverter shutdown method, manual reset.
(*6) Ratings - Refer to derating curve below.
- Load(%) is percent of maximum output current.
(*7) Heatsink has to be chosen according to instruction manual.
(*8) Refer to instruction manual.
(*9) External components are needed for operation.
(Refer to basic connection and instruction manual.)

Derating Curve

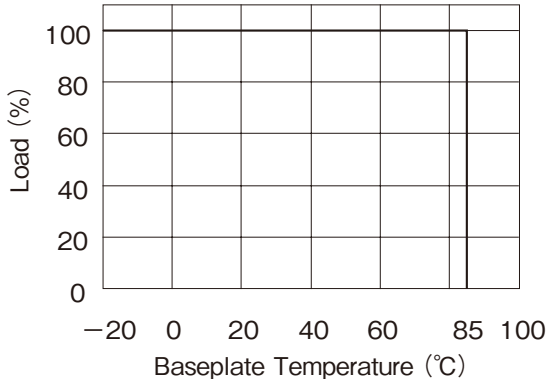

Downloaded from Arrow.com.

PH75F110 Specifications

ITEMS/UNITS \ MODEL			PH75F110-2	PH75F110-3	PH75F110-5	PH75F110-12	PH75F110-15	PH75F110-24	PH75F110-28
Input	Voltage Range	V	DC82 - 185						
	Efficiency (typ) (*1)	%	66	70	81	83	84	85	
	Current (typ) (*1)	A	0.41	0.58	0.84	0.83	0.81	0.82	0.81
Output	Nominal Voltage	VDC	2	3	5	12	15	24	28
	Maximum Current	A	15			6.3	5	3.2	2.7
	Maximum Power	W	30	45	75	75.6	75	76.8	75.6
	Voltage Setting Accuracy (*1)	%	±1						
	Maximum Line Regulation (*2)	mV	20			48	60	96	112
	Maximum Load Regulation (*3)	mV	40			96	120	192	224
	Temperature Coefficient		0.02%/℃						
	Maximum Ripple & Noise (*9)	mVp-p	100			150		240	280
	Voltage Adjustable Range (*10)		±20%		+20%, -60%				
Function	Over Current Protection (*4)		105% - 140%						
	Over Voltage Protection (*5)		165% - 240%		125% - 145%				
	Remote Sensing (*8)		Possible						
	Remote ON/OFF Control (*8)		Possible (SHORT: ON OPEN: OFF)						
	Parallel Operation (*8)		Possible						
	Series Operation (*8)		Possible						
	I.O.G. Signal (*8)		Possible (Open collector output)						
	AUX-BIAS Power Supply		7-10VDC Maximum load 10mA						
Environment	Operating Temperature (*6)	℃	-20 to +85 (Baseplate) Ambient temperature min=-20						
	Storage Temperature	℃	-40 to +85						
	Operating Humidity	%RH	30 - 95 (No dewdrop)						
	Storage Humidity	%RH	10 - 95 (No dewdrop)						
	Vibration		At no operating, 10-55Hz (sweep for 1min) Amplitude 0.825mm constant (maximum 49.0m/s²) X, Y, Z 1h each						
	Shock		196.1m/s² (In package)						
	Cooling (*7)		Conduction cooled						
Isolation	Withstand Voltage		Input-Baseplate : 2.5kVAC, Input-Output : 3kVAC(20mA) for 1min Output-Baseplate : 500VDC for 1min						
	Isolation Resistance		More than 100MΩ at 25℃ and 70%RH Output-Baseplate...500VDC						
Standards	Safety Standards		Approved by UL60950-1, CSA C22.2 No.60950-1, EN60950-1						
Mechanical	Weight (typ)	g	150						
	Size (W x H x D)	mm	62 x 12.7 x 86 (Refer to outline drawing)						

(*1) At 110VDC and maximum output current.
(*2) 88 - 185VDC, constant load.
(*3) No load - full load, constant input voltage.
(*4) Constant current limiting with automatic recovery.
(*5) Inverter shutdown method, manual reset.
(*6) Ratings - Refer to derating curve below.
- Load(%) is percent of maximum output current.
(*7) Heatsink has to be chosen according to instruction manual.
(*8) Refer to instruction manual.
(*9) External components are needed for operation.
(Refer to basic connection and instruction manual.)
(*10) At 110VDC Input. (Refer to instruction manual.)

Derating Curve

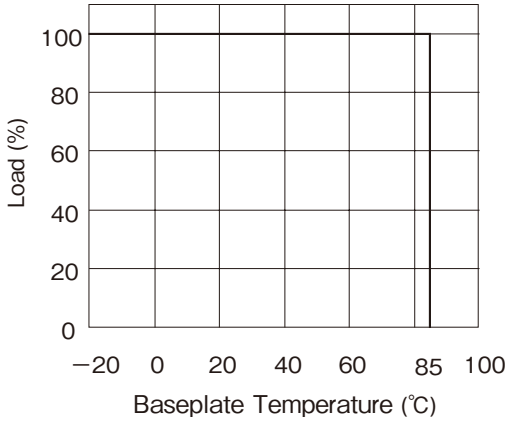

PH

• All specifications are subject to change without notice.

Downloaded from Arrow.com.

PH150S110 Specifications

ITEMS/UNITS		MODEL	PH150S110-5	PH150S110-12	PH150S110-15	PH150S110-24	PH150S110-28
Input	Voltage Range (*6)	V	DC82 - 185				
	Efficiency (typ) (*1)	%	82	85		88	
	Current (typ) (*1)	A	1.66	1.60		1.56	
Output	Nominal Voltage	VDC	5	12	15	24	28
	Maximum Current	A	30	12.5	10	6.3	5.4
	Maximum Power	W	150			151.2	
	Voltage Setting Accuracy (*1)	%	±1				
	Maximum Line Regulation (*2)	mV	20	48	60	96	112
	Maximum Load Regulation (*3)	mV	40	96	120	192	224
	Temperature Coefficient		0.02%/℃				
	Maximum Ripple & Noise (*9)	mVp-p	100	150		240	280
	Voltage Adjustable Range(*8)		+10%, -10% (At 110VDC Input)				
Function	Over Current Protection (*4)		105% - 150%				
	Over Voltage Protection (*5)		125% - 145%				
	Remote Sensing		Possible				
	Remote ON/OFF Control (*8)		Possible (SHORT: ON OPEN: OFF)				
	Parallel Operation		—————				
	Series Operation (*8)		Possible				
Environment	Operating Temperature (*6)	℃	-20 to +85 (Baseplate) Ambient temperature min=-20				
	Storage Temperature	℃	-40 to +85				
	Operating Humidity	%RH	30 - 95 (No dewdrop)				
	Storage Humidity	%RH	10 - 95 (No dewdrop)				
	Vibration		At no operating, 10-55Hz (sweep for 1min) Amplitude 0.825mm constant (maximum 49.0m/s²) X, Y, Z 1 h each				
	Shock		196.1m/s² (In package)				
	Cooling (*7)		Conduction cooled				
Isolation	Withstand Voltage		Input-Baseplate : 2.5kVAC, Input-Output : 3kVAC(20mA) for 1min Output-Baseplate : 500VDC for 1min				
	Isolation Resistance		More than 100MΩ at 25℃ and 70%RH Output-Baseplate...500VDC				
Standards	Safety Standards		Approved by UL60950-1, CSA C22.2 No.60950-1, EN60950-1				
Mechanical	Weight (typ)	g	150				
	Size (W x H x D)	mm	72 x 12.7 x 86 (Refer to outline drawing)				

(*1) At 110VDC and maximum output current.
(*2) 88 - 185VDC, constant load.
(*3) No load - full load, constant input voltage.
(*4) Constant current limiting with automatic recovery.
(*5) Inverter shutdown method, manual reset.
(*6) Ratings - Refer to derating curve below.
- Load(%) is percent of maximum output current.
(*7) Heatsink has to be chosen according to instruction manual.
(*8) Refer to instruction manual.
(*9) External components are needed for operation.
(Refer to basic connection and instruction manual.)

Derating Curve

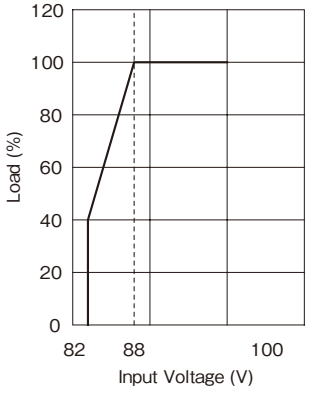

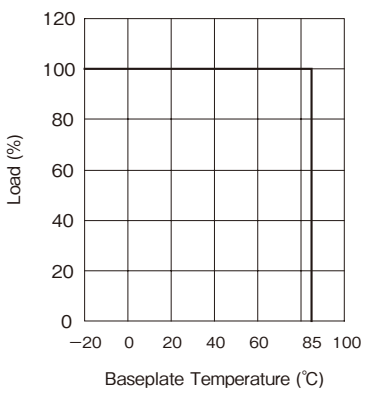

Downloaded from Arrow.com.

PH150F110 Specifications

ITEMS/UNITS		MODEL	PH150F110-2	PH150F110-3	PH150F110-5	PH150F110-12	PH150F110-15	PH150F110-24	PH150F110-28
Input	Voltage Range (*6)	V	DC82 - 185						
	Efficiency (typ) (*1)	%	68	73	83	86	87	89	90
	Current (typ) (*1)	A	0.80	1.12	1.64	1.59	1.57	1.54	1.53
Output	Nominal Voltage	VDC	2	3	5	12	15	24	28
	Maximum Current	A	30			12.5	10	6.3	5.4
	Maximum Power	W	60	90	150			151.2	
	Voltage Setting Accuracy (*1)	%	±1						
	Maximum Line Regulation (*2)	mV	20			48	60	96	112
	Maximum Load Regulation (*3)	mV	40			96	120	192	224
	Temperature Coefficient		0.02%/℃						
	Maximum Ripple & Noise (*9)	mVp-p	100			150		240	280
	Voltage Adjustable Range (*10)		±20%		+20%, -60%				
Function	Over Current Protection (*4)		105% - 140%						
	Over Voltage Protection (*5)		165% - 240%		125% - 145%				
	Remote Sensing (*8)		Possible						
	Remote ON/OFF Control (*8)		Possible (SHORT: ON OPEN: OFF)						
	Parallel Operation (*8)		Possible						
	Series Operation (*8)		Possible						
	I.O.G. Signal (*8)		Possible (Open collector output)						
	AUX-BIAS Power Supply		7-10VDC Maximum load 10mA						
Environment	Operating Temperature (*6)	℃	-20 to +85 (Baseplate) Ambient temperature min=-20						
	Storage Temperature	℃	-40 to +85						
	Operating Humidity	%RH	30 - 95 (No dewdrop)						
	Storage Humidity	%RH	10 - 95 (No dewdrop)						
	Vibration		At no operating, 10-55Hz (sweep for 1min) Amplitude 0.825mm constant (maximum 49.0m/s²) X, Y, Z 1h each						
	Shock		196.1m/s² (In package)						
	Cooling (*7)		Conduction cooled						
Isolation	Withstand Voltage		Input-Baseplate : 2.5kVAC, Input-Output : 3kVAC(20mA) for 1min Output-Baseplate : 500VDC for 1min						
	Isolation Resistance		More than 100MΩ at 25℃ and 70%RH Output-Baseplate...500VDC						
Standards	Safety Standards		Approved by UL60950-1, CSA C22.2 No.60950-1, EN60950-1						
Mechanical	Weight (typ)	g	180						
	Size (W x H x D)	mm	83 x 12.7 x 86 (Refer to outline drawing)						

(*1) At 110VDC and maximum output current.
(*2) 88 - 185VDC, constant load.
(*3) No load - full load, constant input voltage.
(*4) Constant current limiting with automatic recovery.
(*5) Inverter shutdown method, manual reset.
(*6) Ratings - Refer to derating curve below.
- Load(%) is percent of maximum output current.
(*7) Heatsink has to be chosen according to instruction manual.
(*8) Refer to instruction manual.
(*9) External components are needed for operation.
(Refer to basic connection and instruction manual.)
(*10) At 110VDC Input.(Refer to instruction manual.)

Derating Curve

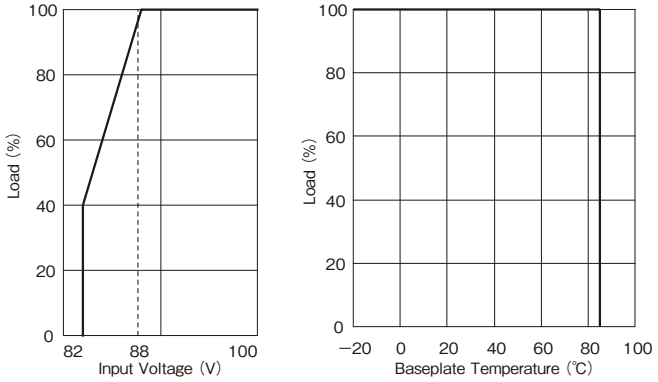

• All specifications are subject to change without notice.

Downloaded from Arrow.com.

PH300F110 Specifications

ITEMS/UNITS		MODEL	PH300F110-2	PH300F110-3	PH300F110-5	PH300F110-12	PH300F110-15	PH300F110-24	PH300F110-28
Input	Voltage Range (*6)	V	DC82 - 185						
	Efficiency (typ) (*1)	%	68	73	83	86	87	89	90
	Current (typ) (*1)	A	1.60	2.24	3.29	3.17	3.13	3.09	3.05
Output	Nominal Voltage	VDC	2	3	5	12	15	24	28
	Maximum Current	A	60			25	20	12.6	10.8
	Maximum Power	W	120	180	300			302.4	
	Voltage Setting Accuracy (*1)	%	±1						
	Maximum Line Regulation (*2)	mV	20			48	60	96	112
	Maximum Load Regulation (*3)	mV	40			96	120	192	224
	Temperature Coefficient (%)		0.02%/℃						
	Maximum Ripple & Noise (*9)	mVp-p	100			150		240	280
	Voltage Adjustable Range (*10)		±20%		+20%, -60%				
Function	Over Current Protection (*4)		105% - 140%						
	Over Voltage Protection (*5)		165% - 240%		125% - 145%				
	Remote Sensing (*8)		Possible						
	Remote ON/OFF Control (*8)		Possible (SHORT: ON OPEN: OFF)						
	Parallel Operation (*8)		Possible						
	Series Operation (*8)		Possible						
	I.O.G. Signal (*8)		Possible (Open collector output)						
	AUX-BIAS Power Supply		7-10VDC Maximum load 10mA						
Environment	Operating Temperature (*6)	℃	-20 to +85 (Baseplate) Ambient temperature min=-20						
	Storage Temperature	℃	-40 to +100						
	Operating Humidity	%RH	30 - 95 (No dewdrop)						
	Storage Humidity	%RH	10 - 95 (No dewdrop)						
	Vibration		At no operating, 10-55Hz (sweep for 1min) Amplitude 0.825mm constant (maximum 49.0m/s²) X, Y, Z 1h each						
	Shock		196.1m/s² (In package)						
	Cooling (*7)		Conduction cooled						
Isolation	Withstand Voltage		Input-Baseplate : 2.5kVAC, Input-Output : 3kVAC(20mA) for 1min Output-Baseplate : 500VDC for 1min						
	Isolation Resistance		More than 100MΩ at 25℃ and 70%RH Output-Baseplate...500VDC						
Standards	Safety Standards		Approved by UL60950-1, CSA C22.2 No.60950-1, EN60950-1						
Mechanical	Weight (typ)	g	250						
	Size (W x H x D)	mm	146 x 12.7 x 86 (Refer to outline drawing)						

(*1) At 110VDC and maximum output current.

(*2) 82 - 185VDC, constant load.

(*3) No load - full load, constant input voltage.

(*4) Constant current limiting with automatic recovery.

(*5) Inverter shutdown method, manual reset.

(*6) Ratings - Refer to derating curve below.
- Load(%) is percent of maximum output current.

(*7) Heatsink has to be chosen according to instruction manual.

(*8) Refer to instruction manual.

(*9) External components are needed for operation.
(Refer to basic connection and instruction manual.)

(*10) At 110VDC input.(Refer to instruction manual.)

Derating Curve

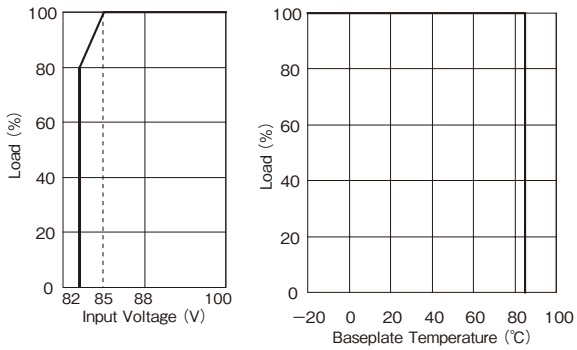

Downloaded from Arrow.com.

PH50S280 Specifications

ITEMS/UNITS \ MODEL			PH50S280-3.3	PH50S280-5	PH50S280-12	PH50S280-15	PH50S280-24	PH50S280-28
Input	Voltage Range	V	DC200 - 400					
	Efficiency (typ) (*1)	%	72	80	82	83	84	
	Current (typ) (*1)	A	0.16	0.22			0.21	
Output	Nominal Voltage	VDC	3.3	5	12	15	24	28
	Maximum Current	A	10		4.2	3.4	2.1	1.8
	Maximum Power	W	33	50	50.4	51	50.4	
	Voltage Setting Accuracy (*1)	%	±1					
	Maximum Line Regulation (*2)	mV	20		48	60	96	112
	Maximum Load Regulation (*3)	mV	40		96	120	192	224
	Temperature Coefficient		0.02%/℃					
	Maximum Ripple & Noise (*9)	mVp-p	100		150		240	280
	Voltage Adjustable Range (*8)		+10%, -10% (At 280VDC Input)					
Function	Over Current Protection (*4)		105 - 150%					
	Over Voltage Protection (*5)		165 - 240%	125 - 145%				
	Remote Sensing (*8)		—————					
	Remote ON/OFF Control (*8)		Possible (SHORT: ON OPEN: OFF)					
	Parallel Operation (*8)		—————					
	Series Operation (*8)		Possible					
Environment	Operating Temperature (*6)	℃	-20 to +85 (Baseplate) Ambient temperature min=-20					
	Storage Temperature	℃	-40 to + 85					
	Operating Humidity	%RH	30 ~ 95 (No dewdrop)					
	Storage Humidity	%RH	10 ~ 95 (No dewdrop)					
	Vibration		At no operating, 10-55Hz amplitude (sweep for 1min) 0.825mm constant (maximum 49.0m/s²) X, Y, Z 1h each					
	Shock		196.1m/s² (In package)					
	Cooling (*7)		Conduction cooled					
Isolation	Withstand Voltage		Input-Baseplate : 2.5kVAC. Input-Output : 3kVAC(20mA) for 1min Output-Baseplate : 500VDC for 1min					
	Isolation Resistance		More than 100MΩ at 25℃ and 70%RH Output-Baseplate...500VDC					
Standards	Safety Standards		Approved by UL60950-1, CSA C22.2 No.60950-1, EN60950-1					
Mechanical	Weight (typ)	g	100					
	Size (W x H x D)	mm	41 x 12.7 x 86 (Refer to outline drawing)					

(*1) At 280VDC and maximum output current.
(*2) 200 - 400VDC, constant load.
(*3) No load - full load, constant input voltage.
(*4) Constant current limiting with automatic recovery.
(*5) Inverter shutdown method, manual reset.
(*6) Ratings - Refer to derating curve below.
- Load(%) is percent of maximum output current.
(*7) Heatsink has to be chosen according to instruction manual.
(*8) Refer to instruction manual.
(*9) External components are needed for operation.
(Refer to basic connection and instruction manual.)

Derating Curve

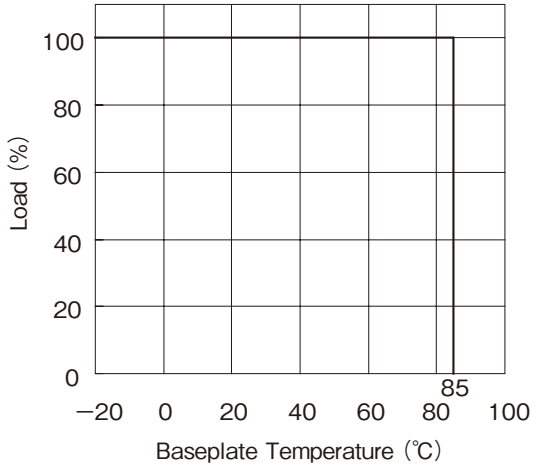

• All specifications are subject to change without notice.
Downloaded from Arrow.com.

PH75S280 Specifications

ITEMS/UNITS \ MODEL			PH75S280-3.3	PH75S280-5	PH75S280-12	PH75S280-15	PH75S280-24	PH75S280-28
Input	Voltage Range	V	DC200 - 400					
	Efficiency (typ) (*1)	%	72	81	83	84	85	
	Current (typ) (*1)	A	0.25	0.33		0.32		
Output	Nominal Voltage	VDC	3.3	5	12	15	24	28
	Maximum Current	A	15		6.3	5	3.2	2.7
	Maximum Power	W	49.5	75	75.6	75	76.8	75.6
	Voltage Setting Accuracy (*1)	%	±1					
	Maximum Line Regulation (*2)	mV	20		48	60	96	112
	Maximum Load Regulation (*3)	mV	40		96	120	192	224
	Temperature Coefficient		0.02%/℃					
	Maximum Ripple & Noise (*9)	mVp-p	100		150		240	280
	Voltage Adjustable Range (*8)		+10%, -10% (At 280VDC Input)					
Function	Over Current Protection (*4)		105 - 150%					
	Over Voltage Protection (*5)		165 - 240%	125 - 145%				
	Remote Sensing		—————					
	Remote ON/OFF Control (*8)		Possible (SHORT: ON OPEN: OFF)					
	Parallel Operation		—————					
	Series Operation (*8)		Possible					
Environment	Operating Temperature (*6)	℃	-20 to +85 (Baseplate) Ambient temperature min = -20					
	Storage Temperature	℃	-40℃ to + 85℃					
	Operating Humidity	%RH	30 ~ 95 (No dewdrop)					
	Storage Humidity	%RH	10 ~ 95 (No dewdrop)					
	Vibration		At no operating, 10-55Hz amplitude (sweep for 1min) 0.825mm constant (maximum 49.0m/s²) X, Y, Z 1h each					
	Shock		196.1m/s² (In package)					
	Cooling (*7)		Conduction cooled					
Isolation	Withstand Voltage		Input-Baseplate : 2.5kVAC, Input-Output : 3kVAC (20mA) for 1min, Output-Baseplate : 500VDC for 1min					
	Isolation Resistance		More than 100MΩ at 25℃ and 70%RH Output-Baseplate...500VDC					
Standards	Safety Standards		Approved by UL60950-1, CSA C22.2 No.60950-1, EN60950-1					
Mechanical	Weight (typ)	g	100					
	Size (W x H x D)	mm	41 x 12.7 x 86 (Refer to outline drawing)					

(*1) At 280VDC and maximum output current.
(*2) 200 - 400 VDC, constant load.
(*3) No load - full load, constant input voltage.
(*4) Constant current limiting with automatic recovery.
(*5) Inverter shutdown method, manual reset.
(*6) Ratings - Refer to derating curve below.
- Load(%) is percent of maximum output current.
(*7) Heatsink has to be chosen according to instruction manual.
(*8) Refer to instruction manual.
(*9) External components are needed for operation.
(Refer to basic connection and instruction manual.)

Derating Curve

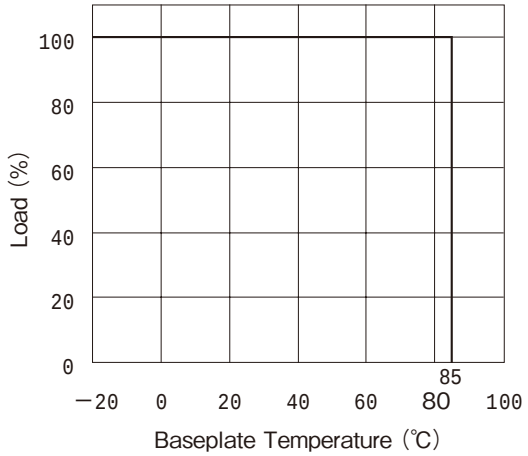

Downloaded from Arrow.com.

PH75F280 Specifications

ITEMS/UNITS \ MODEL			PH75F280-2	PH75F280-3	PH75F280-5	PH75F280-12	PH75F280-15	PH75F280-24	PH75F280-28
Input	Voltage Range	V	DC200 - 400						
	Efficiency (typ) (*1)	%	66	70	81	83	84	85	
	Current (typ) (*1)	A	0.16	0.23	0.33		0.32		
Output	Nominal Voltage	VDC	2	3	5	12	15	24	28
	Maximum Current	A	15			6.3	5	3.2	2.7
	Maximum Power	W	30	45	75	75.6	75	76.8	75.6
	Voltage Setting Accuracy (*1)	%	±1						
	Maximum Line Regulation (*2)	mV	20			48	60	96	112
	Maximum Load Regulation (*3)	mV	40			96	120	192	224
	Temperature Coefficient		0.02%/℃						
	Maximum Ripple & Noise (*9)	mVp-p	100			150		240	280
	Voltage Adjustable Range (*10)		±20%		+20%, -60%				
Function	Over Current Protection (*4)		105% - 140%						
	Over Voltage Protection (*5)		165% - 240%		125% - 145%				
	Remote Sensing (*8)		Possible						
	Remote ON/OFF Control (*8)		Possible (SHORT: ON OPEN: OFF)						
	Parallel Operation (*8)		Possible						
	Series Operation (*8)		Possible						
	I.O.G. Signal (*8)		Possible (Open collector output)						
Environment	Operating Temperature (*6)	℃	-20 to +85 (Baseplate) Ambient temperature min = -20℃.						
	Storage Temperature	℃	-40 to + 85						
	Operating Humidity	%RH	30 - 95 (No dewdrop)						
	Storage Humidity	%RH	10 - 95 (No dewdrop)						
	Vibration		At no operating, 10-55Hz amplitude(sweep for 1min) 0.825mm constant (maximum 49.0m/s²) X, Y, Z 1h each						
	Shock		196.1m/s² (In package)						
	Cooling (*7)		Conduction cooled						
Isolation	Withstand Voltage		Input-Baseplate : 2.5kVAC, Input-Output : 3kVAC(20mA) for 1min Output-Baseplate : 500VDC(100mA) for 1min						
	Isolation Resistance		More than 100M Ω at 25℃ and 70%RH Output-Baseplate...500VDC						
Standards	Safety Standards		Approved by UL60950-1, CSA C22.2 No.60950-1, EN60950-1						
Mechanical	Weight (typ)	g	150						
	Size (W x H x D)	mm	62 x 12.7 x 86 (Refer to outline drawing)						

(*1) At 280VDC and maximum output current.
(*2) 200 - 400VDC, constant load.
(*3) No load - full load, constant input voltage.
(*4) Constant current limiting with automatic recovery.
(*5) Inverter shutdown method, manual reset.
(*6) Ratings - Refer to derating curve on the right.
- Load(%) is percent of maximum output current
(*7) Heatsink has to be chosen according to instruction manual.
(*8) Refer to instruction manual.
(*9) External capacitor is repuired.
(Refer to instruction manual.)
(*10) At 280VDC input.(Refer to instruction manual.)

Derating Curve

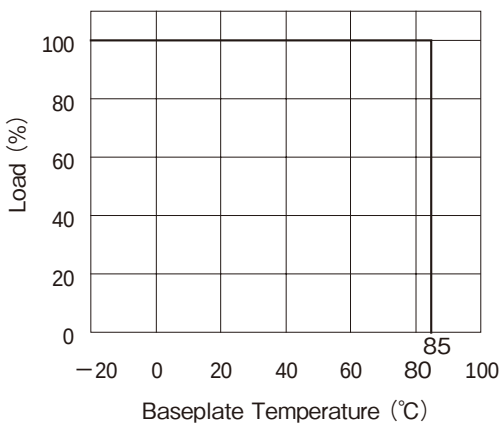

• All specifications are subject to change without notice.
Downloaded from Arrow.com.

PH100S280 Specifications

ITEMS/UNITS			MODEL	PH100S280-3.3	PH100S280-5	PH100S280-12	PH100S280-15	PH100S280-24	PH100S280-28
Input	Voltage Range		V	DC200 - 400					
	Efficiency (typ)	(*1)	%	74	81	83	84	85	
	Current (typ)	(*1)	A	0.32	0.44	0.43		0.42	
Output	Nominal Voltage		VDC	3.3	5	12	15	24	28
	Maximum Current		A	20		8.4	6.7	4.2	3.6
	Maximum Power		W	66	100	100.8	100.5	100.8	
	Voltage Setting Accuracy	(*1)	%	±1					
	Maximum Line Regulation	(*2)	mV	20		48	60	96	112
	Maximum Load Regulation	(*3)	mV	40		96	120	192	224
	Temperature Coefficient			0.02%/℃					
	Maximum Ripple & Noise	(*9)	mVp-p	100		150		240	280
	Voltage Adjustable Range	(*8)		+10%, -10% (At 280VDC Input)					
Function	Over Current Protection	(*4)		105 - 150%					
	Over Voltage Protection	(*5)		165 - 240%	125 - 145%				
	Remote Sensing			Possible					
	Remote ON/OFF Control	(*8)		Possible (SHORT: ON OPEN: OFF)					
	Parallel Operation			—————					
	Series Operation	(*8)		Possible					
Environment	Operating Temperature	(*6)	℃	-20 to +85 (Baseplate) Ambient temperature min=-20					
	Storage Temperature		℃	-40 to + 85					
	Operating Humidity		%RH	30 ～ 95 (No dewdrop)					
	Storage Humidity		%RH	10 ～ 95 (No dewdrop)					
	Vibration			At no operating, 10-55Hz amplitude (sweep for 1min) 0.825mm constant (maximum 49.0m/s²) X, Y, Z 1h each					
	Shock			196.1m/s² (In package)					
	Cooling	(*7)		Conduction cooled					
Isolation	Withstand Voltage			Input-Baseplate : 2.5kVAC, Input-Output : 3kVAC (20mA) for 1min, Output-Baseplate : 500VDC for 1min					
	Isolation Resistance			More than 100MΩ at 25℃ and 70%RH Output-Baseplate...500VDC					
Standards	Safety Standards			Approved by UL60950-1, CSA C22.2 No.60950-1, EN60950-1					
Mechanical	Weight (typ)		g	150					
	Size (W x H x D)		mm	62 x 12.7 x 86 (Refer to outline drawing)					

(*1) At 280VDC and maximum output current.
(*2) 200 - 400VDC, constant load.
(*3) No load - full load, constant input voltage.
(*4) Constant current limiting with automatic recovery.
(*5) Inverter shutdown method, manual reset.
(*6) Ratings - Refer to derating curve below.
- Load(%) is percent of maximum output current.
(*7) Heatsink has to be chosen according to instruction manual.
(*8) Refer to instruction manual.
(*9) External components are needed for operation.
(Refer to basic connection and instruction manual.)

Derating Curve

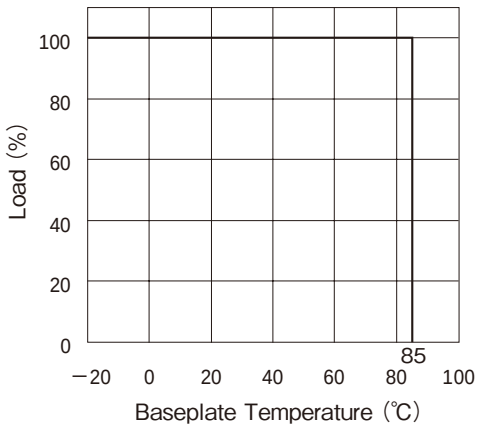

Downloaded from Arrow.com.

PH150S280 Specifications

ITEMS/UNITS		MODEL	PH150S280-3.3	PH150S280-5	PH150S280-12	PH150S280-15	PH150S280-24	PH150S280-28
Input	Voltage Range	V	DC200 - 400					
	Efficiency (typ) (*1)	%	75	82	85		88	
	Current (typ) (*1)	A	0.47	0.65	0.63		0.61	
Output	Nominal Voltage	VDC	3.3	5	12	15	24	28
	Maximum Current	A	30		12.5	10	6.3	5.4
	Maximum Power	W	99	150			151.2	
	Voltage Setting Accuracy (*1)	%	±1					
	Maximum Line Regulation (*2)	mV	20		48	60	96	112
	Maximum Load Regulation (*3)	mV	40		96	120	192	224
	Temperature Coefficient		0.02%/℃					
	Maximum Ripple & Noise (*9)	mVp-p	100		150		240	280
	Voltage Adjustable Range(*8)		+10%, -10% (At 280VDC Input)					
Function	Over Current Protection (*4)		105 - 150%					
	Over Voltage Protection (*5)		165 - 240%	125 - 145%				
	Remote Sensing		Possible					
	Remote ON/OFF Control (*8)		Possible (SHORT: ON OPEN: OFF)					
	Parallel Operation		—————					
	Series Operation (*8)		Possible					
Environment	Operating Temperature (*6)	℃	-20 to +85(Baseplate) Ambient temperature min=-20					
	Storage Temperature	℃	-40 to + 85					
	Operating Humidity	%RH	30 - 95 (No dewdrop)					
	Storage Humidity	%RH	10 - 95 (No dewdrop)					
	Vibration		At no operating, 10 - 55Hz amplitude (sweep for 1min) 0.825mm constant (maximum 49.0m/s²) X, Y, Z 1h each					
	Shock		196.1m/s² (In package)					
	Cooling (*7)		Conduction cooled					
Isolation	Withstand Voltage		Input-Baseplate : 2.5kVAC, Input-Output : 3kVAC (20mA) for 1min, Output-Baseplate : 500VDC for 1min					
	Isolation Resistance		More than 100MΩ at 25℃ and 70%RH Output-Baseplate...500VDC					
Standards	Safety Standards		Approved by UL60950-1, CSA C22.2 No.60950-1, EN60950-1					
Mechanical	Weight (typ)	g	150					
	Size (W x H x D)	mm	72 x 12.7 x 86 (Refer to outline drawing)					

(*1) At 280VDC and maximum output current.
(*2) 200 - 400VDC, constant load.
(*3) No load - full load, constant input voltage.
(*4) Constant current limiting with automatic recovery.
(*5) Inverter shutdown method, manual reset.
(*6) Ratings - Refer to derating curve below.
- Load(%) is percent of maximum output current.
(*7) Heatsink has to be chosen according to instruction manual.
(*8) Refer to instruction manual.
(*9) External components are needed for operation.
(Refer to basic connection and instruction manual.)

Derating Curve

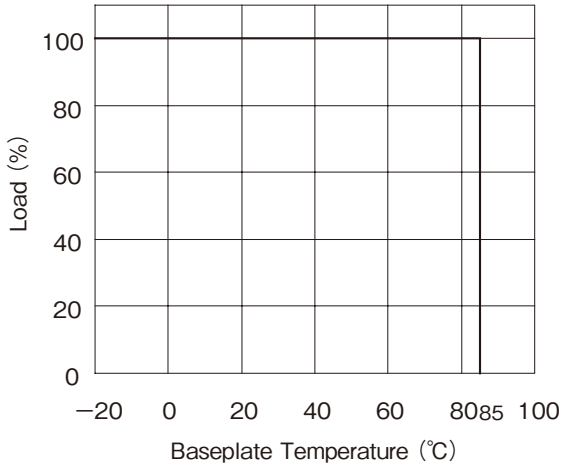

• All specifications are subject to change without notice.
Downloaded from Arrow.com.

PH150F280 Specifications

ITEMS/UNITS \ MODEL			PH150F280-2	PH150F280-3	PH150F280-5	PH150F280-12	PH150F280-15	PH150F280-24	PH150F280-28
Input	Voltage Range	V	DC200 - 400						
	Efficiency (typ) (*1)	%	68	73	83	86	87	90	
	Current (typ) (*1)	A	0.31	0.44	0.65	0.62		0.60	
Output	Nominal Voltage	VDC	2	3	5	12	15	24	28
	Maximum Current	A	30			12.5	10	6.3	5.4
	Maximum Power	W	60	90	150			151.2	
	Voltage Setting Accuracy (*1)	%	±1						
	Maximum Line Regulation (*2)	mV	20			48	60	96	112
	Maximum Load Regulation (*3)	mV	40			96	120	192	224
	Temperature Coefficient		0.02%/℃						
	Maximum Ripple & Noise (*9)	mVp-p	100			150		240	280
	Voltage Adjustable Range (*10)		±20%		+20%, -60%				
Function	Over Current Protection (*4)		105% - 140%						
	Over Voltage Protection (*5)		165% - 240%		125% - 145%				
	Remote Sensing (*8)		Possible						
	Remote ON/OFF Control (*8)		Possible (SHORT: ON OPEN: OFF)						
	Parallel Operation (*8)		Possible						
	Series Operation (*8)		Possible						
	I.O.G. Signal (*8)		Possible (Open collector output)						
Environment	Operating Temperature (*6)	℃	-20 to 85 (Baseplate) Ambient temperature MIN =-20℃						
	Storage Temperature	℃	-40 to + 85						
	Operating Humidity	%RH	30 - 95 (No dewdrop)						
	Storage Humidity	%RH	10 - 95 (No dewdrop)						
	Vibration		At no operating, 10-55Hz (sweep for 1min) Amplitude 0.825mm constant (maximum 49.0m/s²) X, Y, Z 1h each						
	Shock		196.1m/s² (In package)						
	Cooling (*7)		Conduction cooled						
Isolation	Withstand Voltage		Input-Baseplate : 2.5kVAC, Input-Output : 3kVAC(20mA) for 1min Output-Baseplate : 500VDC for 1min						
	Isolation Resistance		More than 100MΩ at 25℃ and 70%RH Output-Baseplate...500VDC						
Standards	Safety Standards		Approved by UL60950-1, CSA C22.2 No.60950-1, EN60950-1						
Mechanical	Weight (typ)	g	180						
	Size (W x H x D)	mm	83 x 12.7 x 86 (Refer to outline drawing)						

(*1) At 280VDC and maximum output current.

(*2) 200 - 400VDC, constant load.

(*3) No load - full load, constant input voltage.

(*4) Constant current limiting with automatic recovery.

(*5) Inverter shutdown method, manual reset.

(*6) Ratings - Refer to derating curve below.
- Load(%) is percent of maximum output current.

(*7) Heatsink has to be chosen according to instruction manual.

(*8) Refer to instruction manual.

(*9) External components are needed for operation.
(Refer to basic connection and instruction manual.)

(*10) At 280VDC Input. (Refer to instruction manual.)

Derating Curve

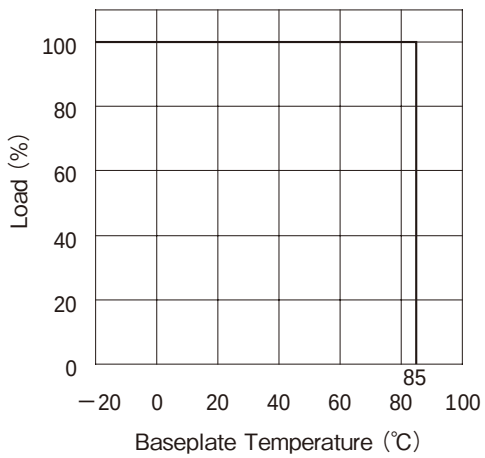

Downloaded from Arrow.com.

PH300S280 Specifications

ITEMS/UNITS			MODEL	PH300S280-3.3	PH300S280-5	PH300S280-12	PH300S280-15	PH300S280-24	PH300S280-28	PH300S280-48
Input	Voltage Range		V	DC200 - 400						
	Efficiency (typ)	(*1)	%	80	85	88				
	Current (typ)	(*1)	A	0.74	1.05	1.22			1.23	
Output	Nominal Voltage		VDC	3.3	5	12	15	24	28	48
	Maximum Current		A	50		25	20	12.5	10.8	6.3
	Maximum Power		W	165	250	300			302.4	
	Voltage Setting Accuracy	(*1)	%	±1%						
	Maximum Line Regulation	(*2)	mV	20		48	60	96	112	192
	Maximum Load Regulation	(*3)	mV	40		96	120	192	224	384
	Temperature Coefficient			0.02%/℃						
	Maximum Ripple & Noise (0~+100℃)	(*9)	mVp-p	100		150		240	280	480
	Maximum Ripple & Noise (−20~0℃)	(*9)	mVp-p	150		225		360	420	720
	Voltage Adjustable Range	(*10)		+20%, -10%		±10%				+20%, -10%
Function	Over Current Protection	(*4)		105 - 150%						
	Over Voltage Protection	(*5)		140-170%	125 - 145%					
	Remote Sensing	(*8)		Possible						
	Remote ON/OFF Control	(*8)		Possible (SHORT: ON OPEN: OFF)						
	Parallel Operation	(*11)		Applicable with CS signal						
	Series Operation	(*8)		Possible						
	I.O.G. Signal	(*8)		Built-in (Open collector output)						
Environment	Operating Temperature	(*6)	℃	-20 to +100 (Baseplate) Ambient temperature min=-20						
	Operating Temperature	(*6)	℃	-20 to +100 : 100%						
	Storage Temperature		℃	-40 - + 100						
	Operating Humidity		%RH	30 - 95 (No dewdrop)						
	Storage Humidity		%RH	10 - 95 (No dewdrop)						
	Vibration			At no operating, 10-55Hz (sweep for 1min) Amplitude 0.825mm constant (maximum 49.0m/s²) X, Y, Z 1h each						
	Shock			196.1m/s²						
	Cooling	(*7)		Conduction cooled						
Isolation	Withstand Voltage			Input-Baseplate : 2.5kVAC, Input-Output : 3kVAC(20mA) for 1min Output-Baseplate : 500VDC for 1min						
	Isolation Resistance			More than 100MΩ at 25℃ and 70%RH Output-Baseplate...500VDC						
Standards	Safety Standards			Approved by UL60950-1, CSA C22.2 No.60950-1, EN60950						
Mechanical	Weight (typ)		g	200						
	Size (W x H x D)		mm	83 x 12.7 x 86 (Refer to outline drawing)						

(*1) At 280VDC and maximum output current.
(Baseplate temperature = +25℃)

(*2) 200 - 400VDC, constant load.

(*3) No load - full load, constant input voltage.

(*4) Constant current limiting with automatic recovery.

(*5) Inverter shutdown method, manual reset with CNT signal.

(*6) Ratings - refer to derating curve below.
- Load(%) is percent of maximum output current.

(*7) Heatsink has to be chosen according to instruction manual.

(*8) Refer to instruction manual.

(*9) External components are needed for operation.
(Refer to basic connection and instruction manual.)

(*10) At 280VDC Input. (Refer to instruction manual.)

(*11) External circuit is needed for operation .
(Refer to instruction manual.)

Derating Curve

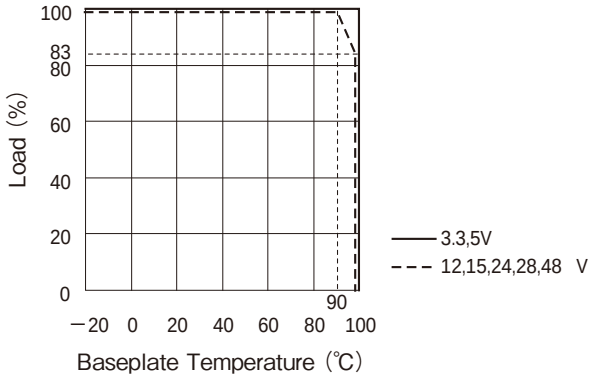

• All specifications are subject to change without notice.

Downloaded from Arrow.com.

PH300F280 Specifications

ITEMS/UNITS			MODEL	PH300F280-2	PH300F280-3	PH300F280-5	PH300F280-12	PH300F280-15	PH300F280-24	PH300F280-28
Input	Voltage Range		V	DC200 - 400						
	Efficiency (typ)	(*1)	%	68	73	83	86	87	89	90
	Current (typ)	(*1)	A	0.63	0.88	1.30	1.25	1.23	1.21	1.20
Output	Nominal Voltage		VDC	2	3	5	12	15	24	28
	Maximum Current		A	60			25	20	12.6	10.8
	Maximum Power		W	120	180	300			302.4	
	Voltage Setting Accuracy	(*1)	%	±1						
	Maximum Line Regulation	(*2)	mV	20			48	60	96	112
	Maximum Load Regulation	(*3)	mV	40			96	120	192	224
	Temperature Coefficient			0.02%/° C						
	Maximum Ripple & Noise	(*9)	mVp-p	100			150		240	280
	Voltage Adjustable Range	(*10)		±20%		+20%, -60%				
Function	Over Current Protection	(*4)		105% - 140%						
	Over Voltage Protection	(*5)		165% - 240%		125% - 145%				
	Remote Sensing	(*8)		Possible						
	Remote ON/OFF Control	(*8)		Possible (SHORT: ON OPEN: OFF)						
	Parallel Operation	(*8)		Possible						
	Series Operation	(*8)		Possible						
	I.O.G. Signal	(*8)		Possible (Open collector output)						
Environment	Operating Temperature	(*6)	℃	-20 to +85 (Baseplate) Ambient temperature min=-20℃						
	Storage Temperature		℃	-40 to + 85						
	Operating Humidity		%RH	30 - 95 (No dewdrop)						
	Storage Humidity		%RH	10 - 95 (No dewdrop)						
	Vibration			At no operating, 10-55Hz (sweep for 1min) Amplitude 0.825mm constant (maximum 49.0m/s²) X, Y, Z 1h each						
	Shock			196.1m/s² (In package)						
	Cooling	(*7)		Conduction cooled						
Isolation	Withstand Voltage			Input-Baseplate : 2.5kVAC, Input-Output : 3kVAC(20mA) for 1min Output-Baseplate : 500VDC(100mA) for 1min						
	Isolation Resistance			More than 100MΩ at 25℃ and 70%RH Output-Baseplate...500VDC						
Standards	Safety Standards			Approved by UL60950-1, CSA C22.2 No.60950-1, EN60950-1						
Mechanical	Weight (typ)		g	250						
	Size (W x H x D)		mm	146 x 12.7 x 86 (Refer to outline drawing)						

(*1) At 280VDC and maximum output current.
(*2) 200 - 400VDC, constant load.
(*3) No load - full load, constant input voltage.
(*4) Constant current limiting with automatic recovery.
(*5) Inverter shutdown method, manual reset.
(*6) Ratings - Refer to derating curve below.
- Load(%) is percent of maximum output current.
(*7) Heatsink has to be chosen according to instruction manual.
(*8) Refer to instruction manual.
(*9) External components are needed for operation.
(Refer to basic connection and instruction manual.)
(*10) At 280VDC Input. (Refer to instruction manual.)

Derating Curve

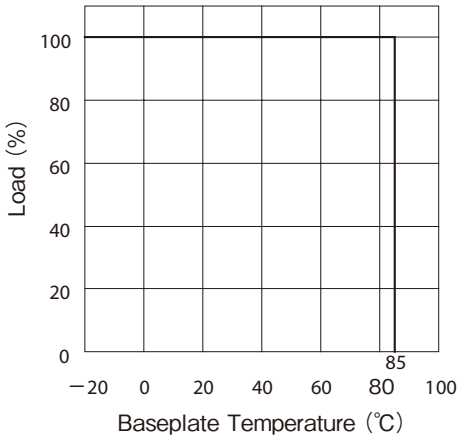

PH

Downloaded from Arrow.com.

PH600S280 Specifications

ITEMS/UNITS			MODEL	PH600S280-3.3	PH600S280-5	PH600S280-12	PH600S280-15	PH600S280-24	PH600S280-28	PH600S280-48
Input	Voltage Range		V	DC200 - 400						
	Efficiency (typ)	(*1)	%	80	84	88				
	Current (typ)	(*1)	A	1.47	2.13	2.44				
Output	Nominal Voltage		VDC	3.3	5	12	15	24	28	48
	Maximum Current		A	100		50	40	25	21.5	12.5
	Maximum Power		W	330	500	600			602	600
	Voltage Setting Accuracy	(*1)	%	±1						
	Maximum Line Regulation	(*2)	mV	20		48	60	96	112	192
	Maximum Load Regulation	(*3)	mV	40		96	120	192	224	384
	Temperature Coefficient			0.02%/℃						
	Maximum Ripple & Noise (0~+100℃)	(*9)	mVp-p	100		150		240	280	480
	Maximum Ripple & Noise (−20~0℃)	(*9)	mVp-p	150		225		360	420	720
	Voltage Adjustable Range	(*10)		+20%, -10%		±10%				+20%, -10%
Function	Over Current Protection	(*4)		105 - 150%						
	Over Voltage Protection	(*5)		140-170%	125 - 145%					
	Remote Sensing	(*8)		Possible						
	Remote ON/OFF Control	(*8)		Possible (SHORT: ON OPEN: OFF)						
	Parallel Operation	(*11)		Applicable with CS signal						
	Series Operation	(*8)		Possible						
	I.O.G. Signal	(*8)		Built-in (Open collector output)						
Environment	Operating Temperature	(*6)	℃	-20 to +100 (Baseplate) Ambient temperature min=-20℃ -20 to +85: 100%, +100: 80%						
	Storage Temperature		℃	-40 to + 100						
	Operating Humidity		%RH	30 - 95 (No dewdrop)						
	Storage Humidity		%RH	10 - 95 (No dewdrop)						
	Vibration			At no operating, 10-55Hz (sweep for 1min) Amplitude 0.825mm constant (maximum 49.0m/s²) X, Y, Z 1h each						
	Shock			196.1m/s²						
	Cooling	(*7)		Conduction cooled						
Isolation	Withstand Voltage			Input-Baseplate : 2.5kVAC, Input-Output : 3kVAC(20mA) for 1min Output-Baseplate : 500VDC for 1min						
	Isolation Resistance			More than 100MΩ at 25℃ and 70%RH Output-Baseplate...500VDC						
Standards	Safety Standards			Approved by UL60950-1, CSA C22.2 No.60950-1, EN60950						
Mechanical	Weight (typ)		g	400						
	Size (W x H x D)		mm	146 x 12.7 x 86 (Refer to outline drawing)						

(*1) At 280VDC and maximum output current.
(Baseplate temperature = +25℃)
(*2) 200 - 400VDC, constant load.
(*3) No load - full load, constant input voltage.
(*4) Constant current limiting with automatic recovery.
(*5) Inverter shutdown method, manual reset with CNT signal.
(*6) Ratings - Refer to derating curve below.
- Load(%) is percent of maximum output current.
Baseplate : Refer to instruction manual.
(*7) Heatsink has to be chosen according to instruction manual.
(*8) Refer to instruction manual.
(*9) External components are needed for operation. (Refer to basic connection and instruction manual.)
(*10) At 280VDC input.(Refer to instruction manual.)
(*11) External circuit is needed for operation . (Refer to instruction manual.)

Derating Curve

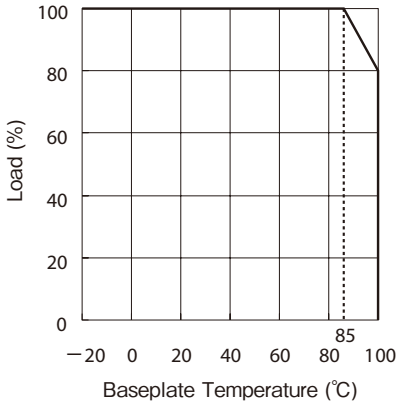

・All specifications are subject to change without notice.

Downloaded from Arrow.com.

Outline Drawing

【PH50S】(Package Type: T41)
【PH75S】(Package Type: T41)

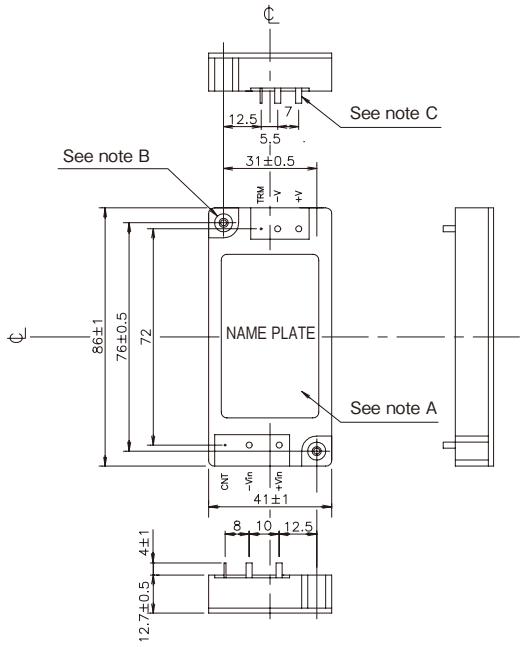

NOTES

A: Model name, input voltage range, nominal output voltage, maximum output current, country of manufacture and safety marking (UL, C-UL [LEVEL3], BSI & CE marking, except 3.3V model) are shown here in accordance with the specifications.

B: M3 tapped holes 2 for customer chassis mounting (FG). Screws must not protrude into power module by more than 12.7mm. (Back side for heat sink.)

C: Input and output terminal ··· 4-Φ2
2-Φ0.6

【PH75F】(Packege Type: T62)

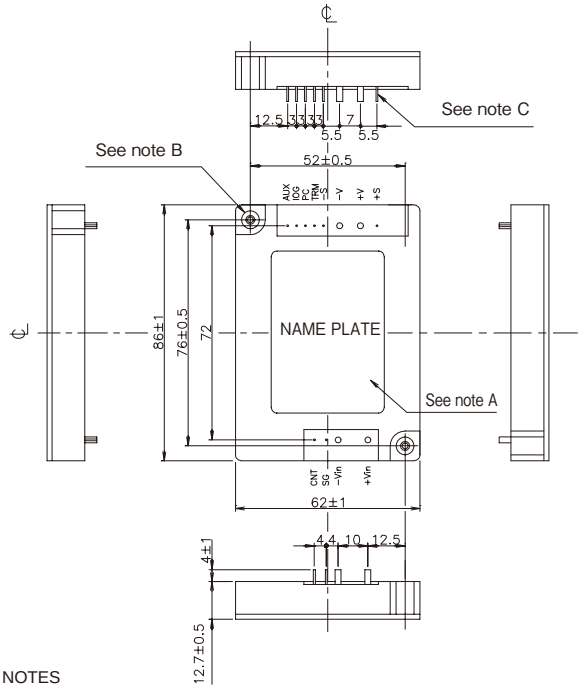

NOTES

A: Model name, input voltage range, nominal output voltage, maximum output current, country of manufacture and safety marking (UL, C-UL [LEVEL3], BSI & CE marking) are shown here in accordance with the specifications.

B: M3 tapped holes 2 for customer chassis mounting (FG). Screws must not protrude into power module by more than 12.7mm. (Back side for heat sink.)

C: Input and output terminal ··· 4-Φ2
8-Φ0.6

【PH100S】(Packege Type: T62)

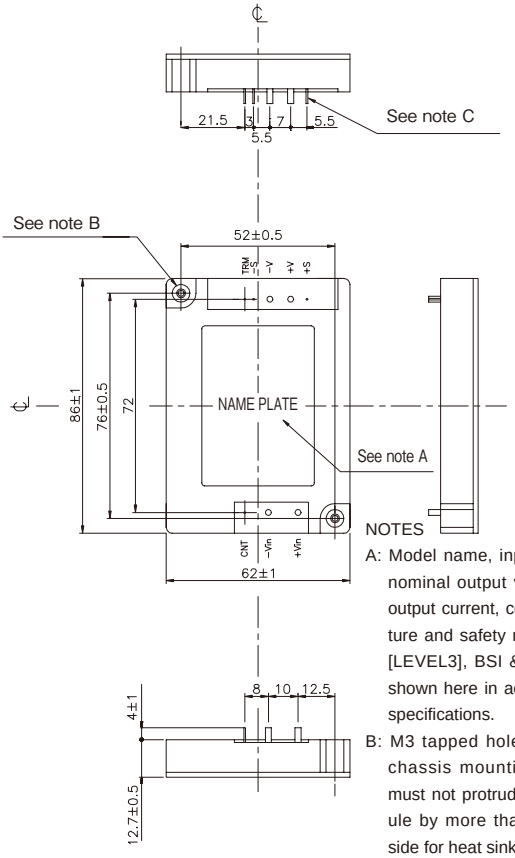

NOTES

A: Model name, input voltage range, nominal output voltage, maximum output current, country of manufacture and safety marking (UL, C-UL [LEVEL3], BSI & CE marking) are shown here in accordance with the specifications.

B: M3 tapped holes 2 for customer chassis mounting (FG). Screws must not protrude into power module by more than 12.7mm. (Back side for heat sink.)

C: Input and output terminal ··· 4-Φ2
4-Φ0.6

【PH150S】(Packege Type: T72)

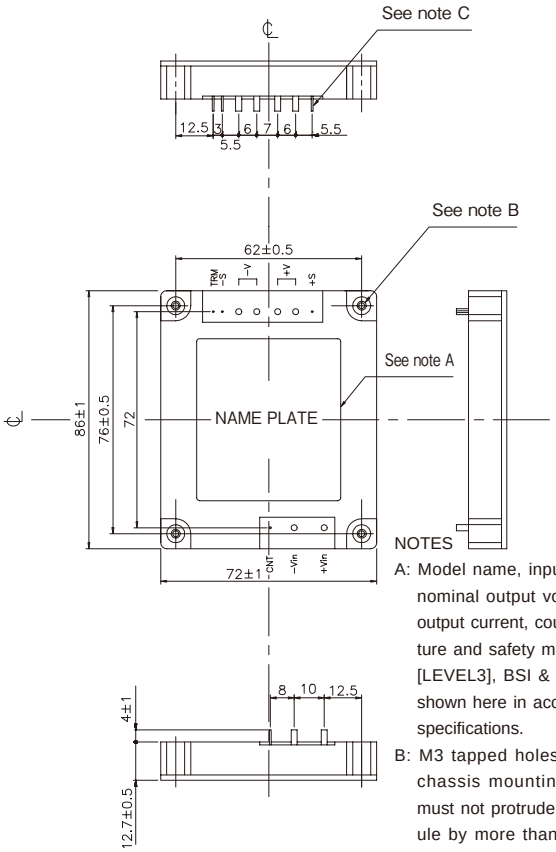

NOTES

A: Model name, input voltage range, nominal output voltage, maximum output current, country of manufacture and safety marking (UL, C-UL [LEVEL3], BSI & CE marking) are shown here in accordance with the specifications.

B: M3 tapped holes 4 for customer chassis mounting (FG). Screws must not protrude into power module by more than 12.7mm. (Back side for heat sink.)

C: Input and output terminal ··· 6-Φ2
4-Φ0.6

PH

Downloaded from Arrow.com.

Outline Drawing

【PH100F】(Package Type: T83)
【PH150F】(Package Type: T83)

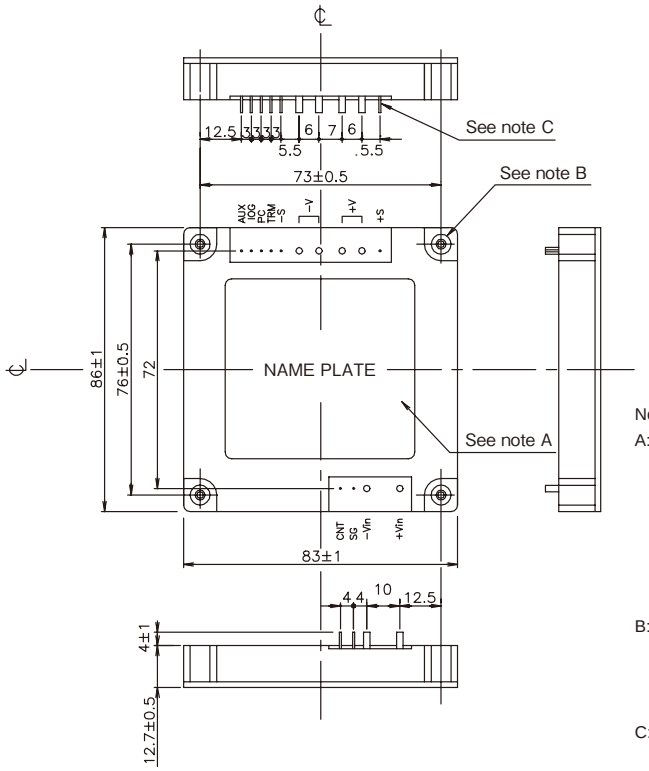

Notes
A: Model name, input voltage range, nominal output voltage, maximum output current, country of manufacture and safety marking (UL, C-UL [LEVEL3], BSI & CE marking) are shown here in accordance with the specifications.

B: M3 tapped holes 4 for customer chassis mounting (FG). Screws must not protrude into power module by more than 12.7mm. (Back side for heat sink.)
C: Input and output terminal ··· 6-Φ2
8-Φ0.6

【PH300F】(Package Type: T146)

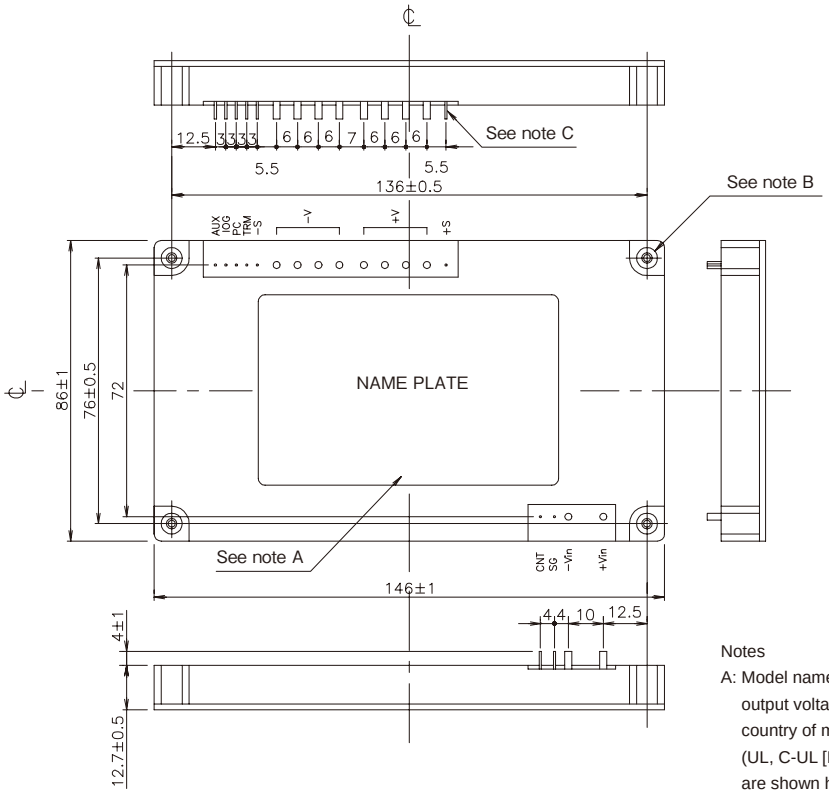

Notes
A: Model name, input voltage range, nominal output voltage, maximum output current, country of manufacture and safety marking (UL, C-UL [LEVEL5], BSI & CE marking) are shown here in accordance with the specifications.
B: M3 tapped holes 4 for customer chassis mounting (FG). Screws must not protrude into power module by more than 12.7mm. (Back side for heat sink.)
C: Input and output terminal ··· 10-Φ2
8-Φ0.6

· All specifications are subject to change without notice.
Downloaded from Arrow.com.

Outline Drawing

【PH300S】(Package Type: T83)

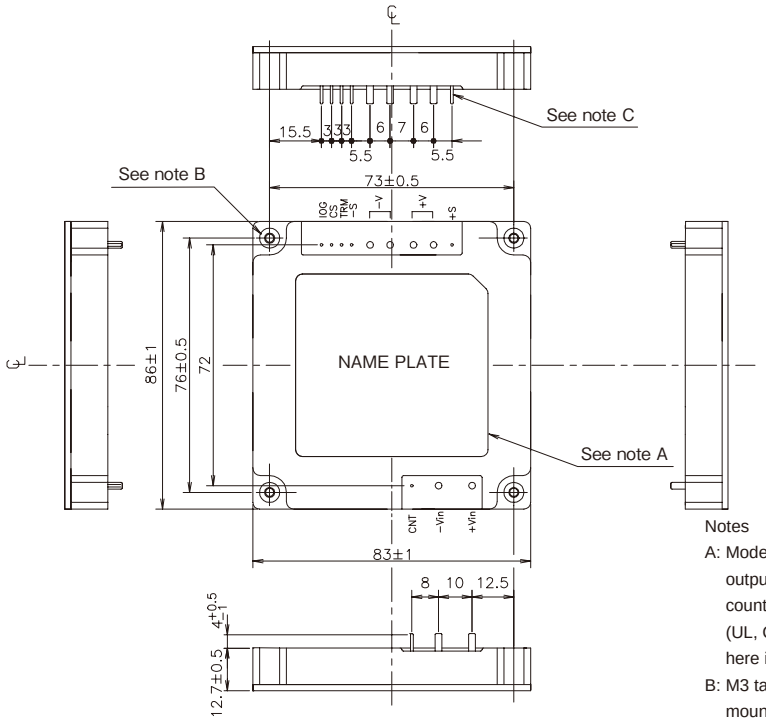

Notes
A: Model name, input voltage range, nominal output voltage, maximum output current, country of manufacture and safety marking (UL, C-UL, BSI & CE marking) are shown here in accordance with the specifications.
B: M3 tapped holes 4 for customer chassis mounting (FG).
C: Input and output terminal ··· 6-Φ2
6-Φ0.8

【PH600S】(Package Type: T146)

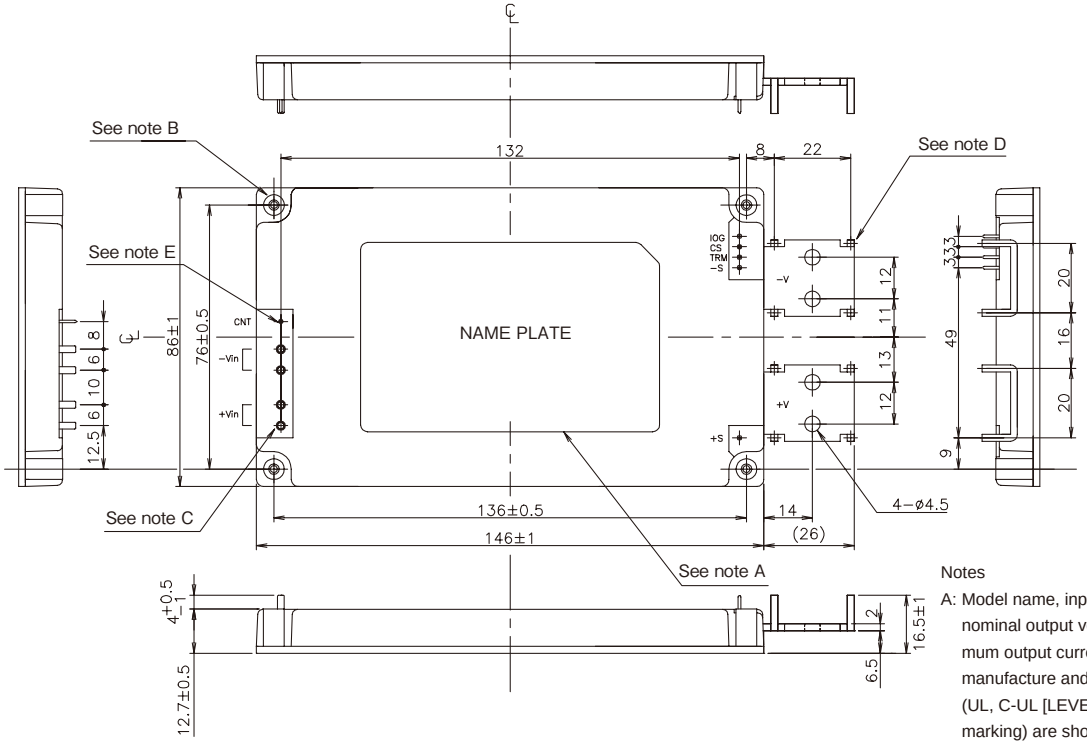

Notes
A: Model name, input voltage range, nominal output voltage, maximum output current, country of manufacture and safety marking (UL, C-UL [LEVEL5], BSI & CE marking) are shown here in accordance with the specifications.
B: M3 tapped holes 4 for customer chassis mounting (FG).
C: Input terminal ··· 4-Φ2
D: Output terminal bar ··· 8-□ 2
E: Signal pin ··· 6-Φ0.8

PH

Downloaded from Arrow.com.

Block Diagram

[PH50S, PH75S, PH100S, PH150S, PH300S, PH600S]

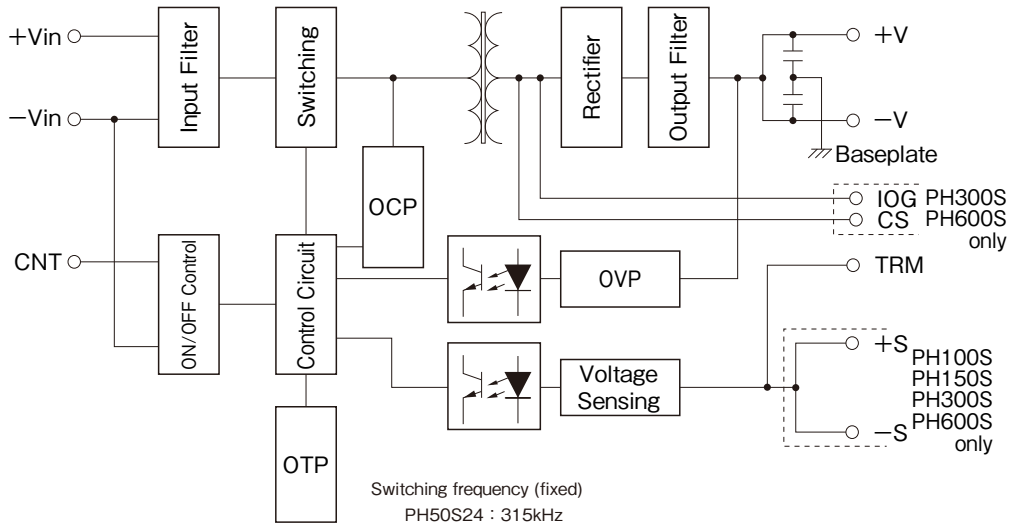

Switching frequency (fixed)
PH50S24 : 315kHz
PH50S48, PH75S48 : 330kHz
PH100S48, PH150S48 : 300kHz
PH50S110, PH75S110, PH150S110 : 330kHz
PH50S280, PH75S280, PH100S280, PH150S280 : 330kHz
PH300S, PH600S : 200kHz

Sequence Time Chart

[PH50S, PH75S, PH100S, PH150S, PH300S, PH600S]

PH

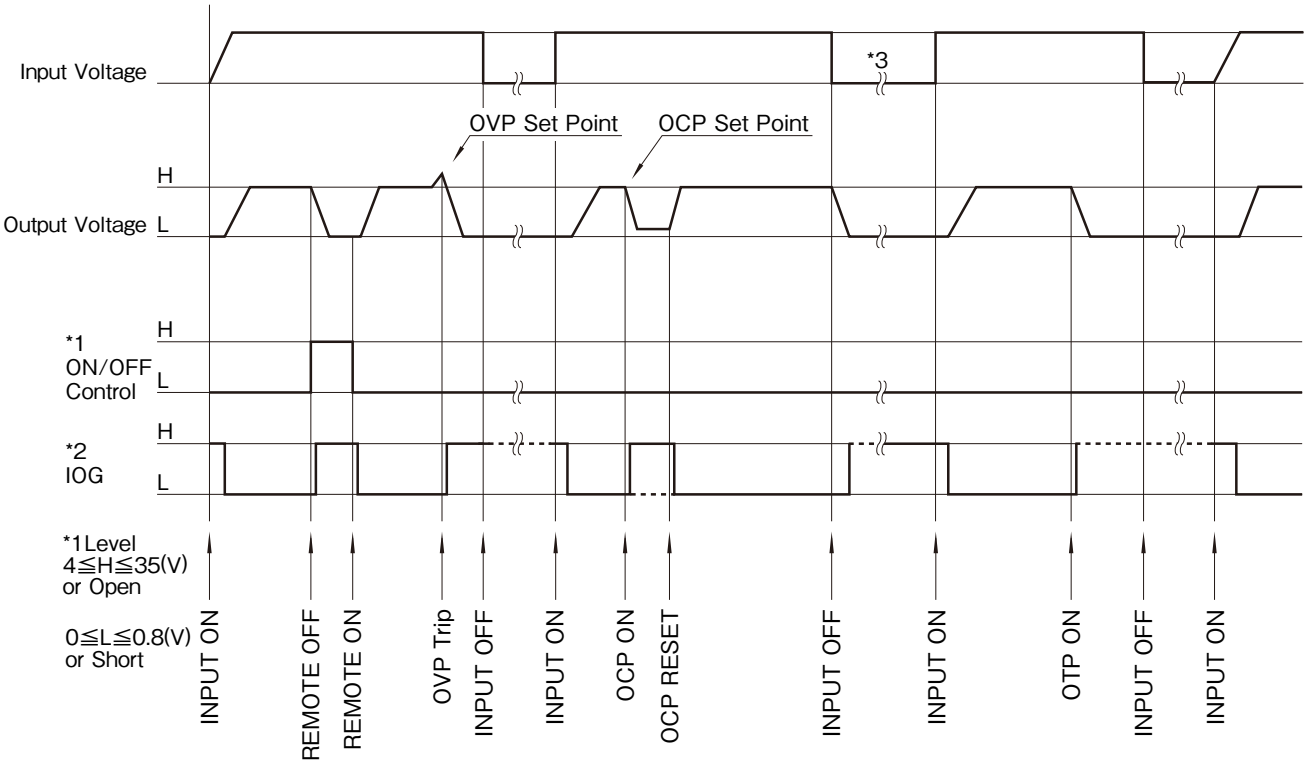

*2 Applicable to PH300S, PH600S only

*3 Please note that the output shuts down when input interruption is less than 1s for PH50S, 75S, 100S, and 150S series.
In case of input interruption, please use F-type PHs.

· All specifications are subject to change without notice.

Downloaded from Arrow.com.

Block Diagram

【PH75F, PH100F, PH150F, PH300F】

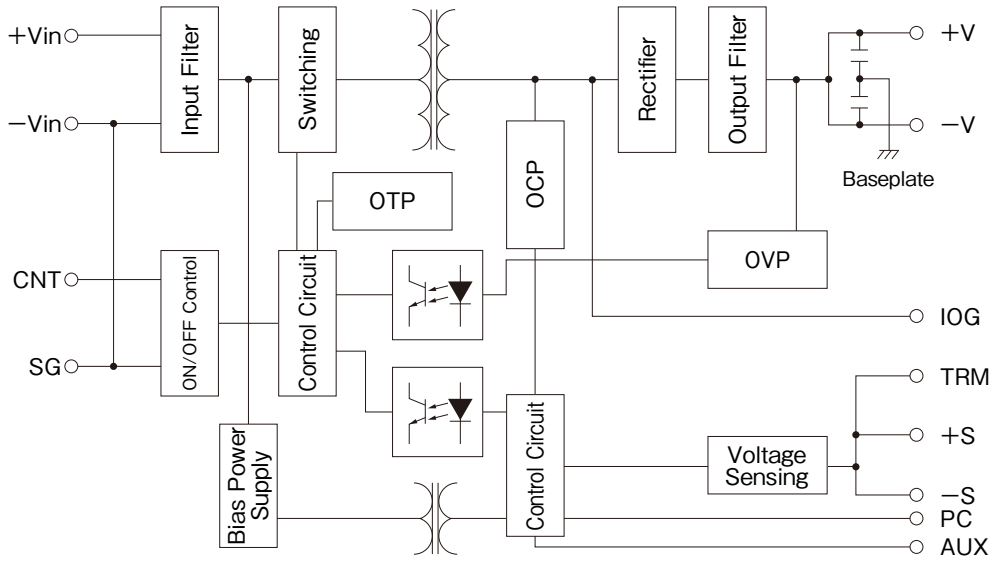

Switching freqency (fixed)
PH75F48, PH75F110, PH75F280 : 330kHz
PH100F24, PH150F48 : 290kHz
PH150F110, PH150F280 : 330kHz
PH300F24, PH300F48 : 230kHz
PH300F110, PH300F280 : 210kHz

Sequence Time Chart

【PH75F, PH100F, PH150F, PH300F】

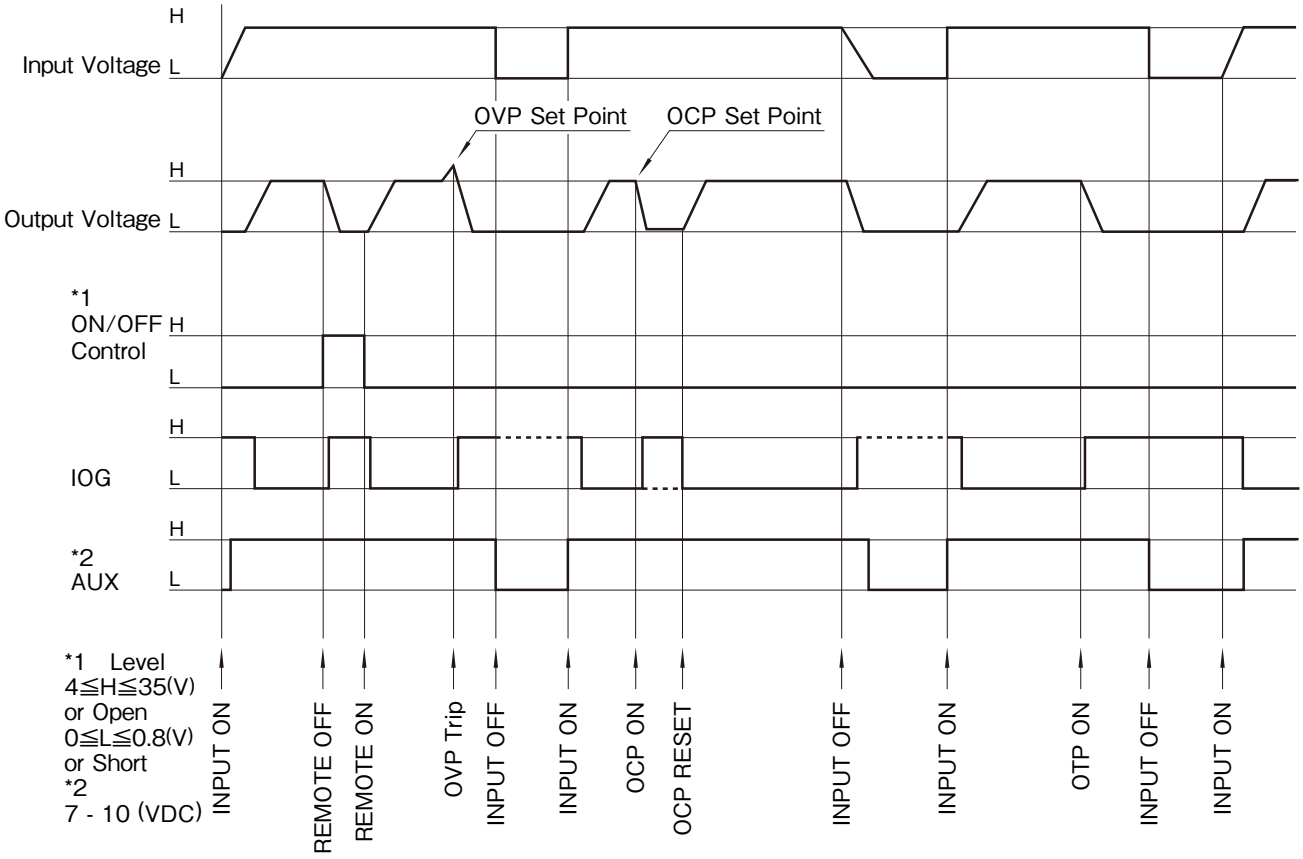

PH

Downloaded from Arrow.com.

PH50 - 150, 75 - 300F Instruction Manual

Before Using The Power Supply

Pay attention to all warnings and cautions before using the unit. Incorrect usage could lead to an electric shock, damage to unit, or a fire hazard. Be sure read below warnings and cautions bef ore using the power module.

⚠ Warning

- Do not touch heatsink and case which may be hot.
- Do not open the case and touch the internal components. They may have high temperature or high voltage which may get you in electric shock or burned.
- When the unit is operating, keep your hands and face away from the unit. You may get injured by an accident.

⚠ Caution

- Confirm that connections to input/output terminals and signal terminals are correct as indicated in the instruction manual.
- Attach a fast blow type external fuse to each module to ensure safety operation and to acquire each safety approval.
- This power supply is designed for professional installation within an end user equipment.
- For 48V input voltage, use isolated voltage by reinforced insulation at primary power supply or double insulation as input power source.
- The output from this power module must be considered as an energy hazard (>240VA power and 2V voltage) and must not be accesible to an end user. End equipment manufacturers must provide protection against inadvertent contact with the output terminals on this product by a service engineer or by service engineer dropping a tool into them.
- The application circuits and their parameters are for reference only. Be sure to verify effectiveness of application circuits and their parameters before finalizing circuit design.
- The information on this document is subject to change without notice. For actual design-in, please refer to the latest publications of data sheet, etc., for the most up-to-date specifications of this unit.
- No part of this document may be copied or reproduced in any form or by any means without prior written consent of Densei-Lambda.

Note : CE Marking

CE Marking, when applied to a product covered by this instruction manual, indicates compliance with the low voltage directive (73/23/EEC) as modified by the CE Marking Directive (93/68/EEC) which complies with EN60950.

1. Explanations on Specifications

1 INPUT VOLTAGE RANGE

PH

Input voltage ranges of PH series are as follows.

24VDC Input: 18 - 36VDC
48VDC Input: 36 - 76VDC
110VDC Input: 82 - 185VDC
280VDC Input: 200 - 400VDC

For 110VDC input model, it is necessary to derate the output power when the input voltage range is in the range of 82 - 88V.

＜PH150＊110＞

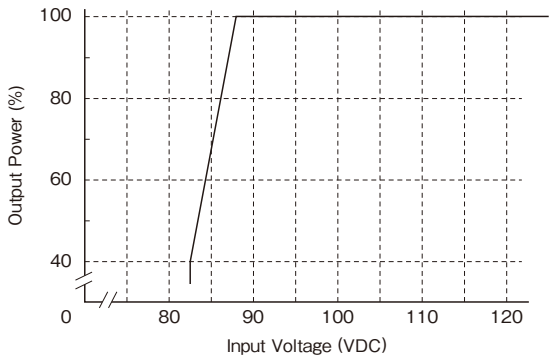

＜PH300F110＞

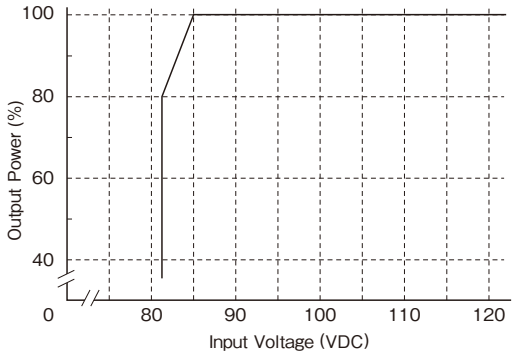

Figure1-1: PH110 Series Output Derating

Input voltage normally includes the ripple voltage (Vr_{pi}) as shown in Figure1-2. The ripple voltage shall be less than the following values.

24VDC Input: 2V
48VDC Input: 4V
110VDC Input: 10V
280VDC Input: 20V

When ripple voltage exceeds the above value, the output ripple voltage may become larger. Also, the output voltage may rise as the input voltage is fluctuated in dynamic line. The peak of input voltage wave shall be within the input voltage range.

・All specifications are subject to change without notice.

Downloaded from Arrow.com.

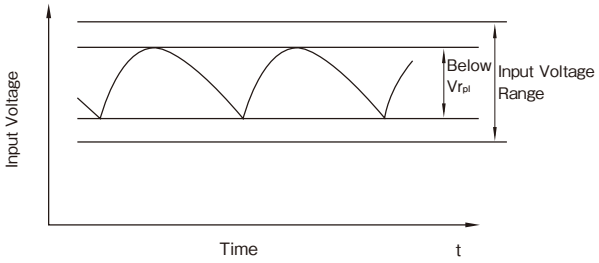

Figure1-2: Input Ripple Voltage

●Basic Connection

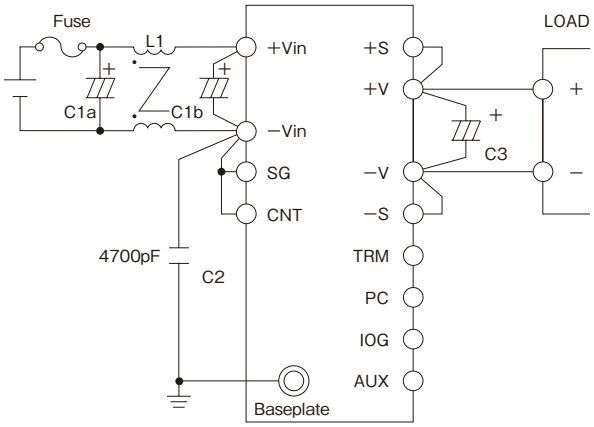

Figure1-3 : Basic Connection Circuit

Input Fuse

No internal fuse is provided in power module. To ensure safety operation and to acquire safety standard approvals, attach an external fuse. The external fuse must be fast blow type and shall be attached to each power module individually.

Furthermore, attach the fuse at $+V_{in}$ side if the ground terminal is at $-V_{in}$ side and at $-V_{in}$ side if the ground terminal is at $+V_{in}$ side.

When the in-rush current causes some trouble at low impedance, use in-rush limiting circuit if necessary.

	50/75W	100W	150W	300W
24V	7A	15A	—	30A
48V	5A	7A	10A	20A
110V	2A	—	5A	10A
280V	1A	1.5A	2A	5A

Table1-2 : Recommend Rating Current of Input Fuse

C1: C1a/C1b

Attach capacitor(s) either between $+V_{in}$ terminal and $-V_{in}$ terminal or before L1.

As shown in Table1-3, location of the capacitor will be either C1a or C1b depending on each input voltage.

	50/75W	100W	150W	300W
24V C1a	—	—	—	1000μF
24V C1b	470μF	470μF	—	—
48V C1b	100μF	220μF	220μF	470μF
110V C1a	220μF	—	220μF	470μF
280V C1a	10μF	22μF	22μF	47μF

Table1-3: Recommended Values of Input filter Capacitor

Because the ripple current flows in the capacitor, confirm the allowance of the ripple current prior to selection of the component.

In addition, attaching a film capacitor C1b (several μF) which can withstand large ripple currents is very effective in reducing the ripple current for 110V and 280V input models.

The following low ESR type Nippon Chemi-con capacitors, or equivalent are recommended:

For 24V input, use LXY Series

For 48V input, use LXV Series

For 110V and 280V input, use KMG Series

L1:

To reduce ripple current at C1 and output spike noise, attach common mode choke coil(s) in each power module individually.

Recommended Impedance Values:

24, 48, 110VDC Input: 1mH

280VDC Input: 2mH

Note: Depending on input filter construction, noise level might exceed noise specification and mis-operation might occur due to resonance of the filter.

To avoid mis-operation and spike noise problem, use an inductance which has a few tens μH of normal component.

C2: 4700pF

To improve the noise characteristics, use a ceramic capacitor which has high withstand voltage when safety standard is necessary to acquire.

24VDC Input: more than 2kVAC

48VDC Input: more than 3kVAC

110VDC Input: more than 3kVAC

280VDC Input: more than 3kVAC

During withstand voltage test, test voltage is applied across this capacitor. Therefore, select components with above recommended withstand voltage.

C2 shall be connected in between -Vin and baseplate as short as possible.

C3:

To avoid the effects of the output line impedance to the power module, attach a capacitor between +V terminal and -V terminal. Equivalent series resistance and equivalent series impedance of the electrolytic capacitor wiring may have some influence at the output during shutdown, or at the output ripple. The output ripple voltage may vary depending on the wiring method of printed circuit board. See the table shown at the end of this section. (Reference table for C3 Value.)

C4:

In case switch and connectors are used between the input power source and input terminals of the PH series, transient surge voltage may occur when switch is turned on/off, or during hot swap at active input line. Therefore, attach a capacitor C4 as shown in Figure1-4.

Downloaded from Arrow.com.

Recommended Capacitor Values:

24VDC Input: 470μF

48VDC Input: 100 - 470μF

110VDC Input: 220 - 470μF

280VDC Input: 10 - 47μF

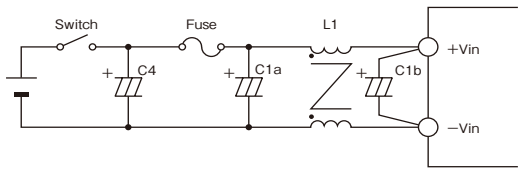

Figure1-4: Input Filter with Input Switch

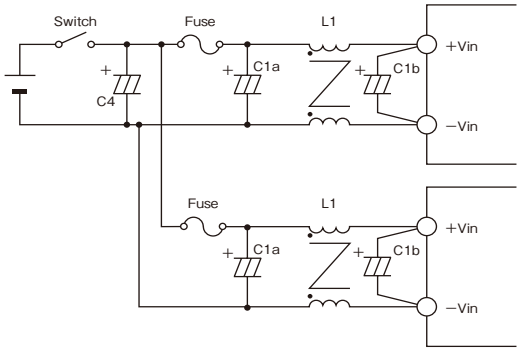

Figure1-5 : Input Filter when several power modules are connected

Reversed Connection of Input

Reverse (-, + electrodes) connection of the input may cause damage to the power module. Whenever there is a possibility for a reverse input connection, attach a protective diode and an input fuse. The rated voltage of the protective diode shall be higher than input voltage, and the maximum in-rush current shall be higher than external fuse rating.

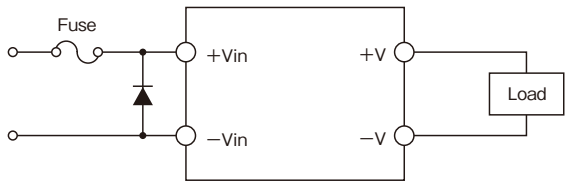

Figure1-5: Protection for Reversed Connection of Input

2 - 1 OUTPUT VOLTAGE RANGE ⟨S type⟩

Output voltage can be adjusted within ±10% of the nominal voltage by adjusting the external trimmer (variable resistor). However, note that OVP (Over Voltage Protection) will be activated when the output voltage is raised over specification range.

Furthermore, when the output voltage is adjusted to high, the output current shall be derated to a value that is prescribed by the maximum output power. Also, when output voltage is adjusted to high, there is a limitation on the input voltage range for each model as shown in Figure2-1.

Values and connection methods of external resistors and variable resistor (VR) are shown as follows.

<24VDC Input>

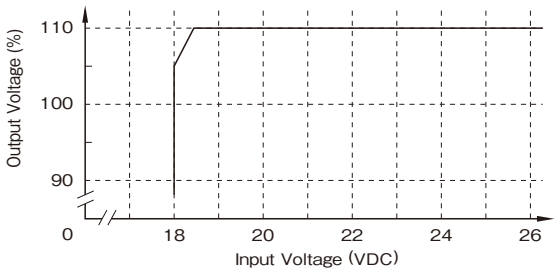

<48VDC Input>

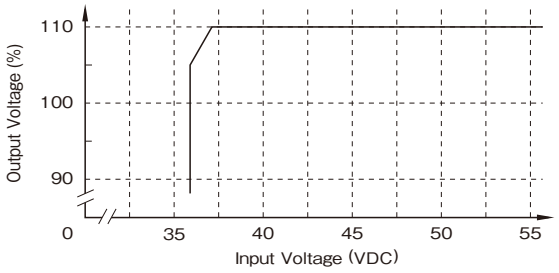

<110VDC Input>

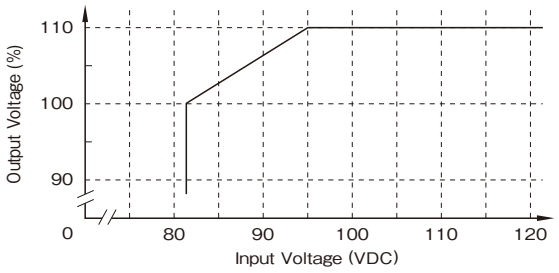

<280VDC Input>

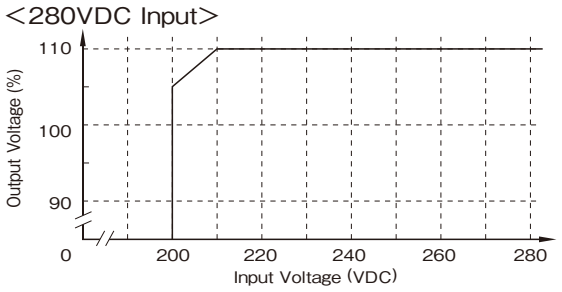

Figure2-1 : Limitation of Input Voltage Range

⟨Example1, 2: Values and Methods of Resistor and variable Resistor Networks⟩

	3V	5V	12V	15V	24V	28V
R1	1.6k	820	3.9k	5.6k	10k	12k
R2	680	510	680	750	820	820
VR	1k	1k	1k	1k	1k	1k

R1, R2: ±5% Tolerance

VR: ±20% Total Tolerance below 1% End Resistanced

Table2-1: Values for External Resistor and Variable Resistor of connection example 1 and 2 (Vo (typ)±10% adjastable)

· All specifications are subject to change without notice.

Downloaded from Arrow.com.

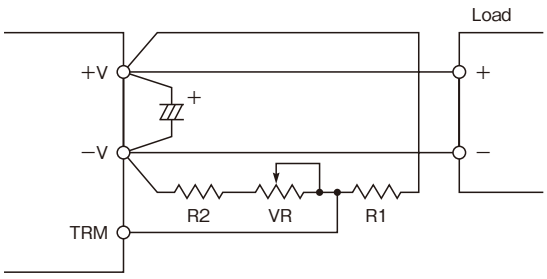

Figure2-2: Connection Example of External Resistor Network #1 (no ±S Terminal, PH50S/PH75S)

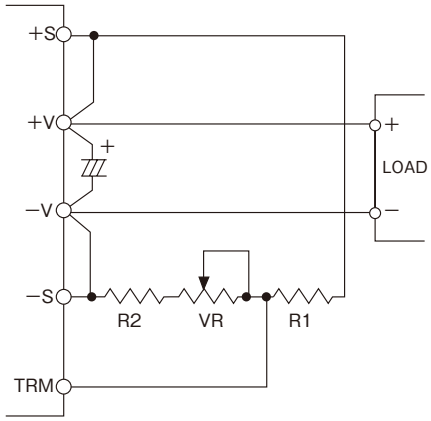

Figure2-3: Connection Example of External Resistor Network #2 (with ±S Terminal)

In the same way, remote sensing wires can be connected to load.

〈Example 3: Values and Method of Resistor and variable Resistor Networks〉

For S type model with remote sensing terminal, the following method can be used.

Variable resistor is attached as remote programming resistor, and the output can be remotely programmed. Ratio of remote programming resistor is basically 1V/kΩ.

	3V	5V	12V	15V	24V	28V
R1	1.5k	3.9k	30k	33k	68k	68k
VR	1k	2k	5k	10k	10k	20k

R1: ±5% Tolerance

VR: ±20% Total Tolerance below 1% End Resistance

Table2-1: Values for External Resistor and Variable Resistor Networks (±10% Output Voltage Change)

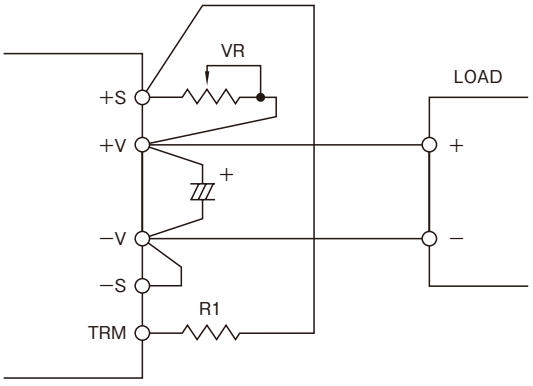

Figure2-4: Connection Example of External Resistor Network #3 PH100S/PH150S

In the same way, remote sensing wire can be connected to load terminal input.

2 - 2 OUTPUT VOLTAGE RANGE 〈F type〉

The output voltage can be adjusted within -60% - +20% (2V, 3V: ±20%) of nominal voltage range. However, note that OVP will be activated when output voltage is raised over specification range.

Furthermore, when the output voltage is adjusted to high, the output current shall be derated to a value that is prescribed by the maximum output power. Also, when output voltage is adjusted to high, there is a limitation on the input voltage range for each model as shown in Figure2-5, as well as limitation on the minimum output current as shown in Figure 2-6 for each model.

<24VDC Input>

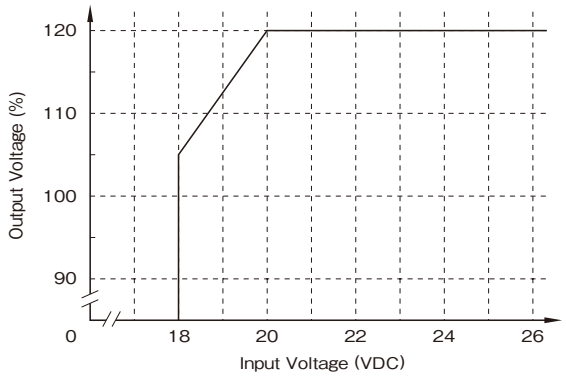

<48VDC Input>

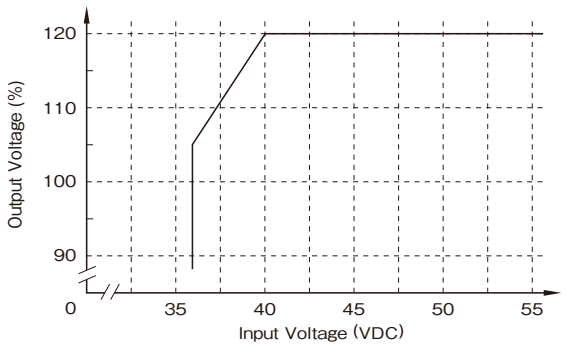

<110VDC Input>

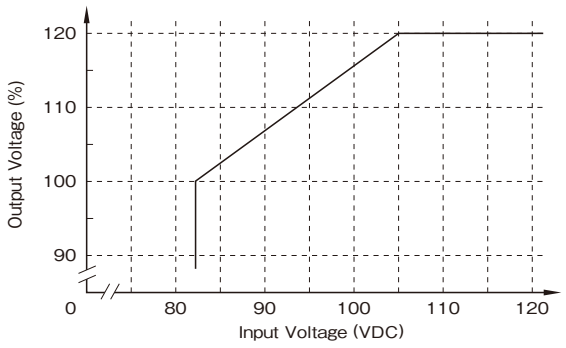

PH

Downloaded from Arrow.com.

<280VDC Input>

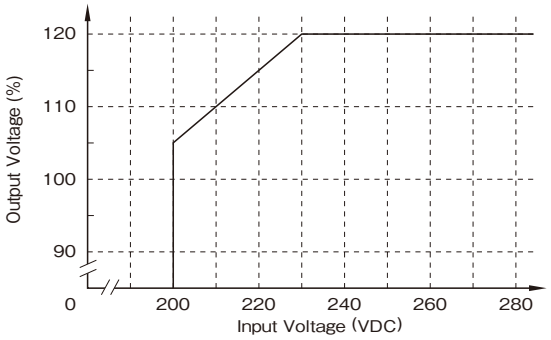

Figure2-5: Limitation of Input Voltage

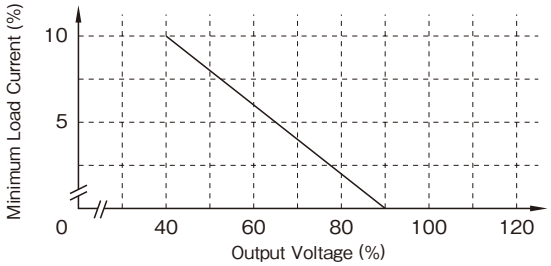

Figure2-6: Minimum Output Current Limit

Resistance values and connection method of external resistor and variable resistor are shown as follows.
In this case, variable resistor is attached as remote programming resistor, and the output can be remotely programmed. Also, aside from remote programming resistor, remote programming can be done externally by voltage source.

	2V	3V	5V	12V	15V	24V	28V
R1	20k	20k	3.3k	3.3k	3.3k	3.3k	3.3k
VR	2k	2k	20k	50k	50k	100k	100k

R1: ±5% Tolerance
VR: ±20% Total Tolerance below 1% End Resistance

Table2-3: Values of External Resistor and Variable Resistor (-60 to +20% Output Voltage Change ; ±20% for 2V 3V)

	2V	3V	5V	12V	15V	24V	28V
R1	43k	43k	43k	43k	43k	43k	43k
VR	1k	1k	2k	5k	5k	10k	10k

R1: ±5% Tolerance
VR: ±20% Total Tolerance End Resistance below 1%

Table2-4 : Values of External Resistor and Variable Resistor (±10% Output Voltage Change)

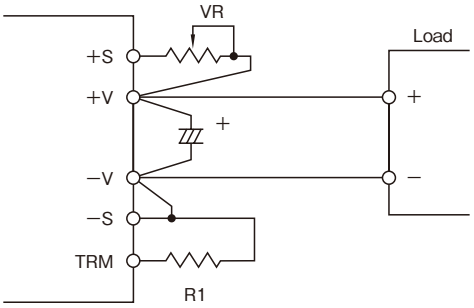

Figure2-7: Connection Example of External Resistor

In the same way, remote sensing wires can be connected to load terminal input.

〈Changing Output Voltage by Applying External Reference Voltage; F type only〉

On F type power module, the output voltage can be adjusted within the same range as remote programming with variable resistor by applying external voltage to TRM terminal. The output voltage for this case can be calculated by the following equation.

Output Voltage=TRM Voltage × Nominal Output Voltage

〈Reference〉 Trim Circuit

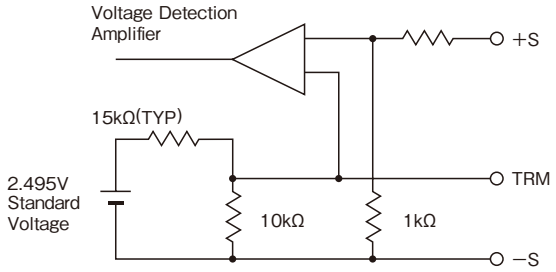

Figure2-8: Network of Trim Circuit

Reference voltage for Voltage Detection Amplifier is the TRM terminal voltage. When TRM terminal is 1.0V (TYP), output is nominal voltage.
For other applications not described here, use this value as a reference when selecting external component values.

〈Application Example of External Voltage〉

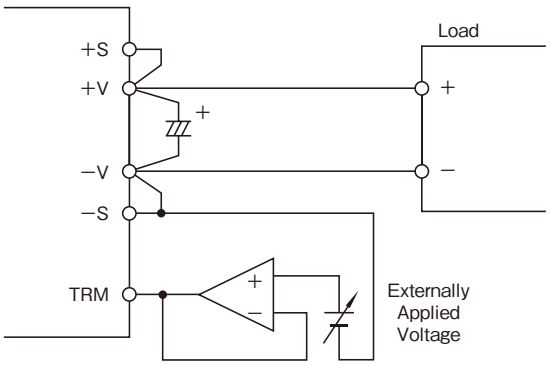

Figure2-9: Example of Applied Voltage

3 MAXIMUM OUTPUT RIPPLE & NOISE

The maximum output ripple and noise are measured by the following prescribed method based on JEITA RC-9141.
The connection is shown in Figure3-1. Attach a film capacitor (1μF) to a point 50mm from the output terminal. Then attach a coaxial cable with JEITA attachment to both sides of the film capacitor as shown in Figure3-1. Oscilloscope shall be set at 100MHz band width.

· All specifications are subject to change without notice.
Downloaded from Arrow.com.

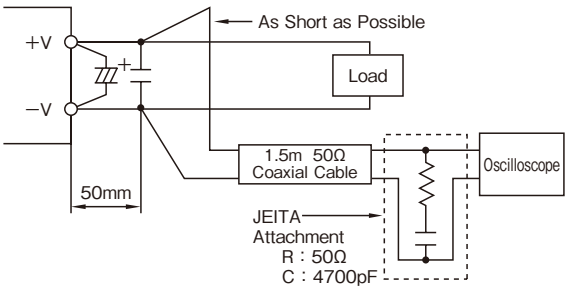

Figure3-1: Measurement Method of Maximum Output Ripple Voltage (including Noise)

4 MAXIMUM LINE REGULATION

Maximum line regulation is defined as the output voltage deviation when the input voltage is slowly varied (steady-state) within the input voltage range.

5 MAXIMUM LOAD REGULATION

Maximum load regulation is defined as the output voltage deviation when the output current is slowly varied (steady-state) within the output current range.

〈S type〉
A minimum load current of more than 3% (4% for PH50S) of the nominal output current shall be taken when the load current is dynamically changed. In case the load current is changed from less than the above minimum load current value, the output voltage may dynamically fluctuate.
When using module in dynamic load mode, audible noise could be heard and output voltage fluctuation will increase. Therefore, please evaluate thoroughly when using this module.

6 OVER CURRENT PROTECTION (OCP)

OCP function is provided.
Output will automatically recover when short or overload condition is released. This setting value is fixed and cannot be change externally.
Note that the module may be damaged depending on thermal conditions when operating continuously under short or overload condition for a long period.

7 OVER VOLTAGE PROTECTION (OVP)

OVP function is provided.
The setting value is relative to the nominal output voltage and is fixed. Therefore, it cannot be changed externally.
To recover the output voltage after OVP function activates, wait until input voltage becomes less than the following voltage values and then reapply input voltage.

	S type	F type
24VDC Input	10VDC	10VDC
48VDC Input	13.5VDC	4.5VDC
110VDC Input	25VDC	10VDC
280VDC Input	90VDC	25VDC

Table7-1: Input Voltage to Release OVP

8 THERMAL PROTECTION

Thermal protection is provided.
This function activates for abnormal ambient temperature rise and abnormal internal temperature rise of power supply and shuts the output off. Thermal protection will activate at 100±15℃ baseplate temperature.
To recover the output, shut off the input once, and then reapply input after the baseplate temperature has been cooled down sufficiently.

9 REMOTE SENSING (+S, -S TERMINALS)

In the power modules except S type of 50W and 75W, there are remote sensing terminals to compensate the voltage drop caused by wiring to load terminal from output terminal of the power supply. If the remote sensing function is unnecessary (i.e. local sensing is used), shorten with wires +S terminal to +V terminal, and -S terminal to -V terminal.
Compensated voltage range of line drop (voltage drop by wiring) shall be set such that output voltage between +V and −V does not exceed specified output voltage range and output must be within the maximum output power value. Also, line drop voltage between -V and -S (-V and negative side of the load) shall be less than 2V. To avoid and to decrease the noise affects, shielded wire, twisted wire, and parallel pattern wire etc. shall be used as remote sensing wire.

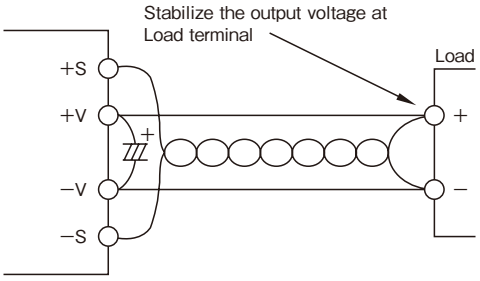

Figure9-1: Using Remote Sensing

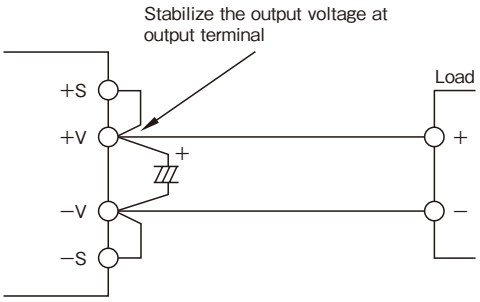

Figure9-2: Without Remote Sensing

10 ON/OFF CONTROL (CNT TERMINAL)

The output can be turned on or off without shutting down the input.
The control circuit is in the input side (primary side), and CNT terminal is used. The ground of CNT terminal is SG terminal for a module with SG terminal, and -V_{in} terminal for a module without SG terminal. -V terminal and SG terminal is connected inside of the module. If this function is unnecessary, short CNT and SG terminals.

PH

Downloaded from Arrow.com.

1) The maximum applied voltage to CNT terminal is 35V, and the reversed voltage is -0.7V maximum. Source current of CNT terminal is approximately 0.5mA. If the wire would be long, attach 0.1μF capacitor between CNT terminal and SG terminal.
2) ON/OFF control can be controlled by the device switching on/off of the contact point (switch or relay) or photocoupler. The ON/OFF control circuit shall be insulated by relay or photocoupler.
   ＊When using photocoupler, connect CNT and SG terminals as short as possible at transistor side.

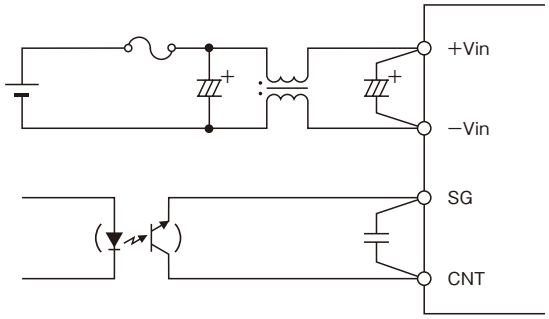

Figure10-1: Connection of CNT Terminal

CNT Level for Input-V_{in} (SG)	Output Status
4V≦H≦35V or Open	OFF
0≦L≦0.8V or Short	ON

Table10-1: ON/OFF Control Mode

— Caution —

If −Vin is not connected, or improperly connected, internal circuit of power module could be damaged when input is applied. For example, CNT terminal could blow out when current flows through an abnormal path such as $+V_{in}$ to CNT created by improper connection.

To avoid such a damage, ensure all the terminals are connected before input is applied.

PH

11 PARALLEL OPERATION (PC TERMINAL)

Only F type power modules provide PC terminal. By connecting PC terminal of each module, up to 11 units of same model (same output voltage and current) can be connected in parallel, and the output current is equally shared among each power module.

Note that maximum output power of each module should not exceed specifications.

By setting accuracy of output voltage of each power module in parallel operation within ±1%, the maximum load current can be used up to 95% of nominal output current value.

(Example)

2 units of PH300F48-5 are to be used in parallel operation.

The total nominal output current is 120A,

then

$$120 \times 0.95 = 114(A)$$

will be calculated as the maximum load current.

For details of parallel connection and redundant operation, refer to Application Note “Parallel Operation.”

12 SERIES OPERATION

Series operation is available for all PH series models.

Contact us for maximum allowable units that can be used in series operation.

(A) Series Operation for High Output Voltage

In series operation for high output voltage configurations, attach a by-pass diode to avoid to applying reverse voltage.

Rating of by-pass Diode, D1 and D2

1. Repetitive Reversed Voltage
   $V_{RRM} \geqq$ 2 times as rated output voltage
2. Average of Output Current
   $I_o \geqq$ 2 times as rated output current
3. Forward Voltage Drop
   $V_F \geqq$ minimum
   (Schottky barrier type)

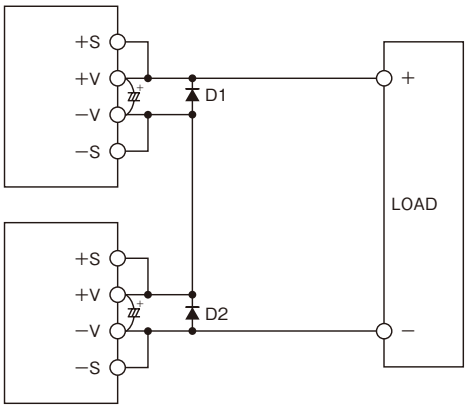

Figure12-1: Series Operation for High Output Voltage Configurations

(B) Series Operation using ±Output

No diode is necessary if + side load and - side load are completely separated.

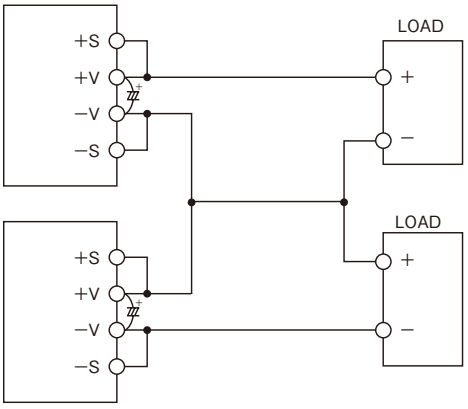

Figure12-2: Series Operation using ± Output

13 I.O.G. SIGNAL (IOG TERMINAL)

I.O.G. signal is provided in the F type power module. By using IOG terminal, good/no good operation can be monitored.

This monitoring signal output is in the secondary (output) side and is an open collector output.

At good inverter operation, IOG monitors LOW (maximum sink current = 5mA; maximum applied voltage = 35V).

・All specifications are subject to change without notice.
Downloaded from Arrow.com.

When OCP is operating, IOG signal becomes unstable.
Ground of IOG terminal is -S terminal.
In parallel operation as shown as Figure13-1, the minimum load current shall be more than 10% of the total nominal output current. Note that If load is less than 10%, IOG signal may be unstable.
In a parallel application where diode is used at the output of the power module, required minimum load current is not specified.
(Sensing point is at anode side of the diode.)

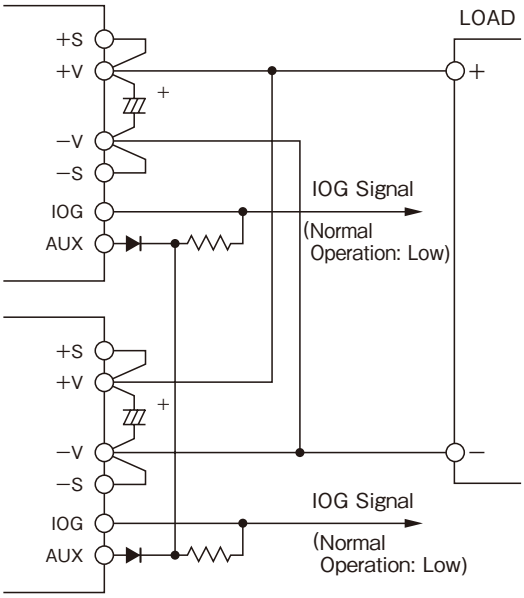

Figure13-1: Example of IOG Terminal Connection

(Example)
2 units of PH300F48-5 are to be used in parallel operation. The total nominal output current is 120A,
then

$$120 \times 0.1 = 12 \ (A)$$

will be calculated as the minimum load current.

14 AUXILIARY POWER SUPPLY FOR EXTERNAL SIGNAL (AUX TERMINAL)

AUX terminal is provided inside the F type power module.
The output voltage of AUX terminal is in the range of 7 - 10 VDC, and the maximum output current is 10mA.
When using this terminal in parallel connection with other AUX terminal in DC/DC power modules, a diode must be attached. See Fig13-1 for connection example. Even for this case, maximum output current should be 10mA.
Avoid connecting AUX terminal directly with other terminals of the module because this may damage the power module.
Ground of AUX terminal is -S terminal.

15 OPERATING TEMPERATURE

By maintaining baseplate temperature below 85℃ at actual operating conditions, operation is possible. For details of thermal design, refer to Application Note “Thermal Design.”

16 OPERATING HUMIDITY

Note that dew condensations may cause abnormal operation and damage to power module.

17 STORAGE TEMPERATURE

Note that abrupt temperature changes may cause condensation and bad effects on soldering.

18 STORAGE HUMIDITY

Storing power modules in high temperature and high humidity creates oxidation on each terminals and causes soldering problems.

19 COOLING METHOD

Because the operating temperature range is prescribed by baseplate temperature, several cooling methods are possible.
For details of thermal design, refer to Application Note “Thermal Design.”

20 BASEPLATE TEMPERATURE VS. OUTPUT REGULATION

Baseplate temperature vs. output regulation is defined as the output voltage deviation ratio when operating baseplate temperature is changed.

21 WITHSTAND VOLTAGE

This PH series is designed to withstand 2.5kVAC between input and baspelate, and 3kVAC between input and output for 1 minute each. (For 24VDC input model, it is designed to withstand 2kVAC between input and baseplate, and 2kVAC between input and output for 1 minute). When withstand voltage test would be carried out at incoming inspection etc., the limit value of the tester shall be set at 20mA.

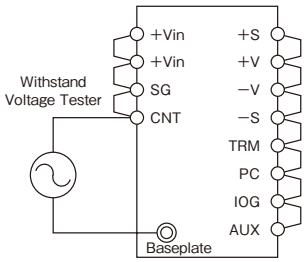

2.5kVAC for 1 minute (20mA)
(24VDC Input model: 2kVAC)
Figure21-1: Withstand Voltage Test between Input and Baseplate

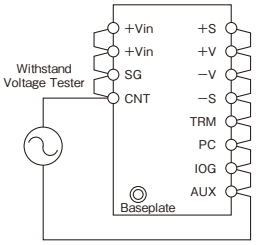

3kVAC for 1 minute (20mA)
(24VDC Input model: 2kVAC)
Figure21-2: Withstand Voltage Test between Input and output

Downloaded from Arrow.com.

This series is designed to withstand 500VDC between output and baseplate for 1 minute. When the test would be carried out at incoming inspection etc., be sure not to apply AC voltage; apply DC voltage. In case AC voltage is applied, the power module might be damaged.

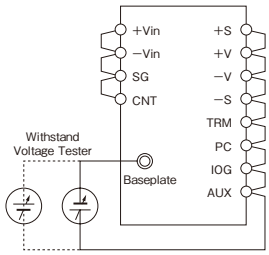

500VDC between output and baseplate for 1 minute
Figure21-3: Withstand Voltage Test between output and baseplate

Do not apply the test voltage by throw-in. Gradually raise the voltage from zero, and also gradually drop down the tester for shut off. Especially take care when using withstand voltage tester with timer because impulse is generated which is several times high as the applied voltage when the switch is turned off by the timer which might cause damage to the module.
Short the output side as shown in Fig.21-1 to Fig.21-3.

22 INSULATED RESISTANCE

DC insulated tester (max. 500V) shall be set between output and baseplate. The insulated resistance is more than 100MΩ at 500VDC. Depending on insulation testers, high pulse may occur when the voltage is changed.
Be sure that the tester is fully discharged by a resistor etc. after every test.

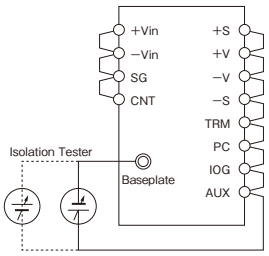

(more than 500MΩ between the output and baseplate at 500VDC)
Figure22-1: Insulation Test

23 VIBRATION

Refer to Application Note "Installation."
Power Module Vibration specification value is the value when Power Module alone is mounted on Printed Wiring Board.
Therefore, when using large-sized heatsink, be sure to fix not only on Power Module but also on Equipment Chassis in order to avoid excessive stress on Power Module and Printed Wiring Board.

24 SHOCK

Values are measured at our packing and shipping conditions.

25 OTHERS

The performance of a system with Power Module is influenced according to various conditions -- PCBs, chassis, mechanics, heat dissipation.
Please evaluate actual products, and confirm its performance.
(For details, please refer Power Module Application Note.)

Reference table for C3 Value

Model / Vout	PH50S PH75S	PH75F	PH100S PH150S	PH100F PH150F	PH300F48 PH300F110 PH300F280	PH300F24
2V		6.3V 1000μF		6.3V 2200μF	6.3V 4700μF	
3V	6.3V 470μF	6.3V 1000μF	6.3V 1000μF	6.3V 2200μF	6.3V 4700μF	
5V	10V 470μF	10V 1000μF	10V 1000μF	10V 1000μF	10V 2200μF	
12V	25V 220μF	25V 220μF	25V 470μF	25V 470μF	25V 1000μF	25V 1000μF
15V	25V 220μF	25V 220μF	25V 470μF	25V 470μF	25V 1000μF	
24V	35V 120μF	35V 120μF	35V 220μF	35V 220μF	35V 560μF	
28V	50V 100μF	50V 100μF	50V 220μF	50V 220μF	50V 470μF	50V 1000μF

Note) 1. Use the capacitor of good temperature characteristics and with low impedance.
2. Connect the capacitor to module output terminal with as short leads as possible.
3. Be aware of the ripple current tolerance of the capacitor.
4. Using LXY series of Nippon Chemi-con or equivalent will meet design requirement in above 1 and 3.

・All specifications are subject to change without notice.

Downloaded from Arrow.com.

3. PH-SERIES Parallel Operation

1 INTRODUCTION

PH series (F type only) equally shares current by connecting each PC terminal of power module in parallel.
There are 2 different parallel operations as follows.

(1) Parallel Operation
When load current can not be supplied by only a unit of power module, the output can be enhanced. Also, the reliability of the system can be improved to derate the output power.

(2) N+1 Parallel Redundant Operation
For power supply system required high reliability, it is possible to improve the reliability of the system by using N+1 units for load of N units.
In parallel operation with N+1 units, even though one of the power modules is failed, performance of the system can be maintained for the other units cover for the failure power module and share the load current.

2 PRECAUTION IN PARALLEL OPERATION

Basic cautions and warnings in parallel operation are as follows.

- Only F type power modules are applicable.
  Inhibit parallel operation on S type power modules.
- Available to use 11 units maximum in identical model (same output power and voltage.)
- Attach a common mode choke coil at input of each power module.
- Accuracy of output voltage adjustment shall be within ±1%.
- The maximum load current shall be less than 95% of nominal output current.
- Ground of PC terminal (signal ground) is -S terminal. Inhibit to use as power line.
- Use same length and size of output load wire between power modules in parallel operation and loads.
- If IOG and AUX terminals are used, read its explanation in the manual.
- When the distance between power modules is too long, current balance might get worse due to switching noise. As countermeasure, please connect a ceramic capacitor (0.01 to 0.1 uF) between PC and -S terminal of each power module.

3 PARALLEL OPERATION

(a) Parallel connection to enhance the output and to improve the reliability

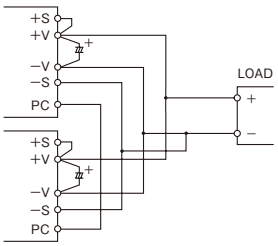

Figure3-1: Parallel Operation

(b) Parallel Operation programmed output voltage

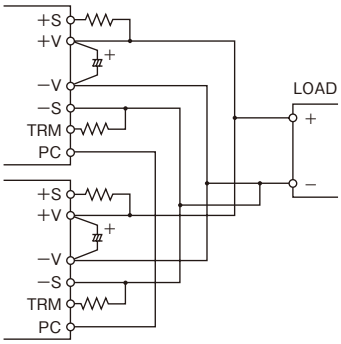

Figure3-2: Programmed Output Voltage

(c) Parallel Operation with adjustable output voltage

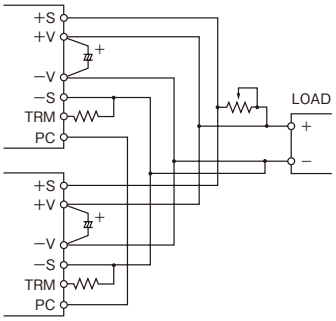

Figure3-3: Parallel Operation with adjustable voltage

(d) Parallel operation when the output voltage is adjusted by applying voltage externally

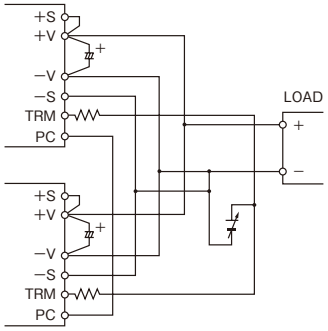

Figure 3-4: Parallel Operation which is possible to adjust output voltage by external applied voltage

PH

Downloaded from Arrow.com.

4 N+1 REDUNDANT OPERATION

(a) N+1 Redundant connection

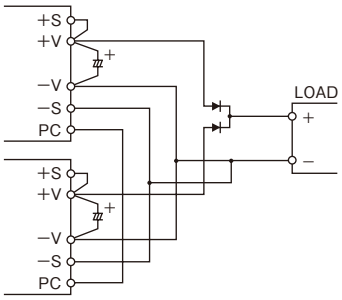

Figure4-1: N+1 Redundant Operation

(b) Redundant Operation with programmed output voltage

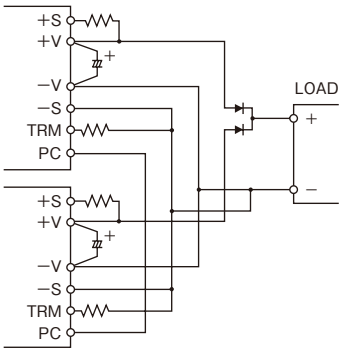

Figure4-2: N+1 Redundant Operation with programmed output voltage

(c) Redundant operation with adjustable output voltage

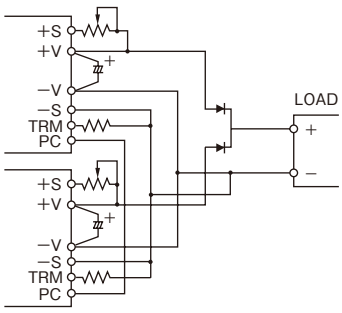

Figure4-3 : N+1 Redundant Operation with adjustable output voltage

(d) Redundant operation when the output voltage is adjusted by applying voltage externally

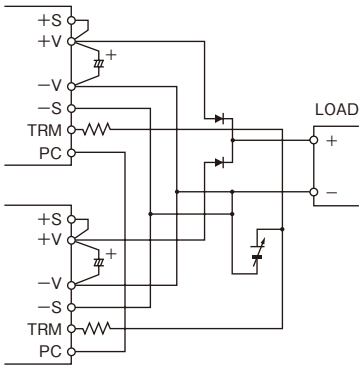

Figure4-4 : N+1 Redundant Operation which is possible to adjust the output voltage by external applied voltage

Note) Please do sufficient evaluation on actual products when applying N+1 redundant or parallel operation.

PH

4. Before You Think The Module is damaged

Confirm the following items before you think the module is damaged or failed.

1) No Output
- Is the rated input voltage supplied?
- Are the ON/OFF control terminal, remote sensing terminal, and output volatage trimming terminal connected correctly?
- For adjusted output, is the variable resistor network set up and connected correctly?
- Is there any troubles with the connected load?

2) High Output Voltage
- Is the remote sensing connected correctly?
- For adjusted output, is the variable resistor network set up and connected correctly?

3) Low Output Voltage
- Is the rated input voltage supplied?
- Is the remote sensing connected correctly?
- Is it measured at sensing point?
- For adjusted output, is the variable resistor network set up and connected correctly?
- Is there any troubles with the connected load?

4) Over Load Regulation or Over Input Regulation
- Is the rated input voltage supplied?
- Are the input and output terminals connected correctly?
- Is it measured at sensing point?
- Are input and output wires too thin?

5) High Output Ripple
- Is it same measuring meathod as the instruction manual?
- Is the input ripple voltage within the specification?

· All specifications are subject to change without notice.

Downloaded from Arrow.com.

PH300S, 600S Series Instruction Manual

● PH50～150, 75～300F Instruction Manual GO!! B-322Page

Before Using The Power Supply

Pay attention to all warnings and cautions before using the unit. Incorrect usage could lead to an electrical shock, damage to unit, or fire hazard.

⚠ Warning

- Do not touch heatsinks and case which may be hot.
- Confirm connections to input/output terminals and signal terminals are correct as indicated in instruction manual.
- Attach a fast blow type external fuse to each module to ensure safety operation and to acquire each safety standard approval.
- This power supply is designed for professional installation within an end user equipment.
- For PH300S48, use insulated voltage by reinforced insulation at primary power supply or double insulation as input power source.
- The output from this power supply must be considered as an energy hazard (>240VA power and 2V voltage) and must not be accessible to a user. End equipment manufacturers must provide protection against inadvertent contact with the output terminal on this product by a service engineer or by the service engineer dropping a tool into them.

Note : CE Marking

CE Marking, when applied to a product covered by this instruction manual, indicates compliance with the low voltage directive (73/23/EEC) as modified by the CE Marking Directive (93/68/EEC) which complies with EN60950.

1. Terminal Explanation

【Model PH300S】

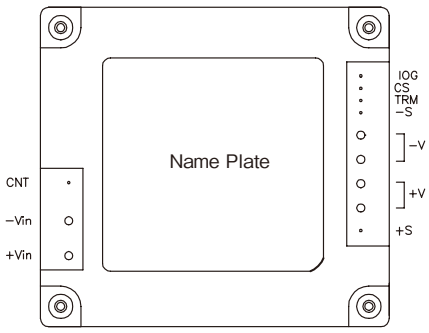

[Input Side Terminals]
CNT: ON/OFF Control
−Vin: −input Terminal
+Vin: +input Terminal

【Model PH600S】

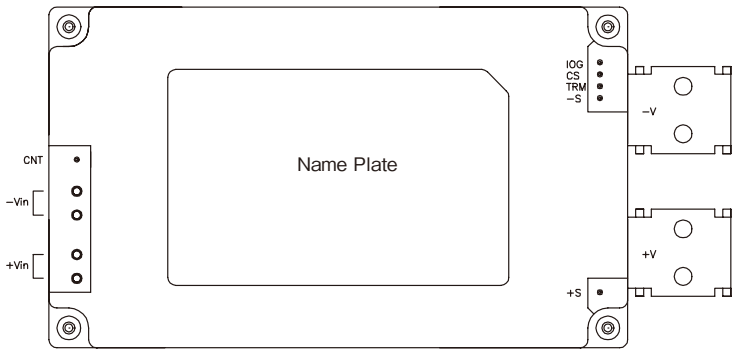

[Output Side Terminals]
IOG: Inverter Operation Good
CS: Output Current Monitoring Signal
TRM: Output Voltage Trimming Terminal
−S: −Remote Sensing
−V: −Output Terminal
+V: +Output Terminal
+S: +Remote Sensing

Baseplate can be connected to FG through M3 mounting tapped holes.
Connect +Vin, -Vin, +V, -V with consideration of contacting resistance.

PH

Downloaded from Arrow.com.

2. Explanations on Specifications

1 Input Voltage Range

Input voltage ranges for PH300S, 600S series are as follow.

48VDC Input: 36 - 76VDC
280VDC Input: 200 - 400VDC

Input voltage normally includes ripple voltage (Vrpl) as shown as Figure1-1. The ripple voltage shall be less than following values.

48VDC Input: 4Vp-p
280VDC Input: 20Vp-p

Peak of input voltage wave shall not be exceed above input voltage range.
Output voltage would be fluctuated as dynamic line changes.
The output ripple voltage may become bigger if the bottom of input ripple voltage is below 220V for 280VDC input model and below 40VDC for 48VDC input model.

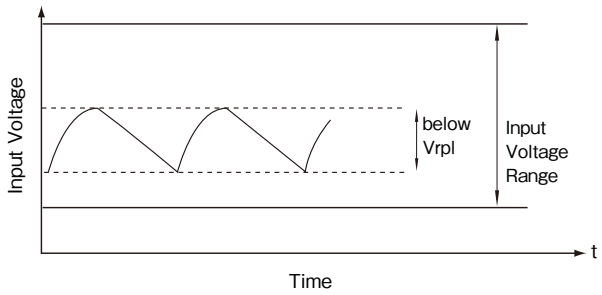

Figure1-1 Ripple Voltage

●Basic Connection

(PH300S)

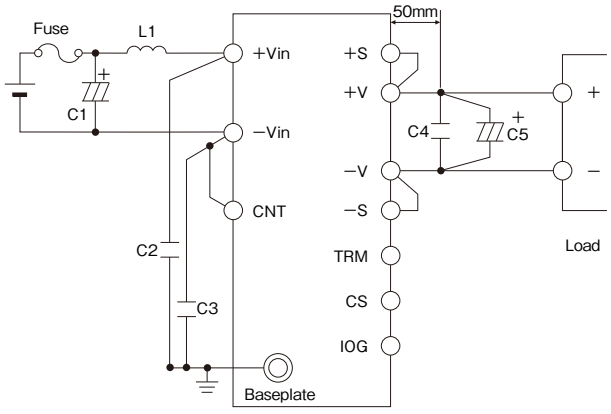

(PH600S)

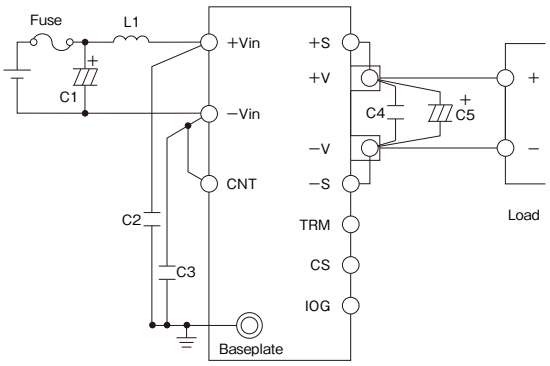

Figure1-2 Basic Connection

Input Fuse

No internal fuse is provided in the power module. To ensure the safety operation and to acquire safety standard approvals, attach an external fuse. The external fuse must be fast blow type and be attached to each module individually.
Furthermore, attach the fuse at +Vin side if the ground is -Vin side and at -Vin side if the ground is at +Vin side.
Use in-rush current limit circuit when the in-rush current may make troubles.

	300W	600W
48VDC Input	20A	—
280VDC Input	5A	10A

Table1-1 Recommended Rating Current of Input Fuse

C1:

Attach electrolytic capacitor(s) between +Vin and -Vin terminals.
The capacitor shall be lower equivalence series resistance (ESR). Especially under low ambient temperature, the voltage of C1 becomes unstable due to ESR at line off. Hence, be aware the output might be not normal line off.
Confirm the allowance of ripple current because ripple current flows in the capacitor, and then choose the capacitor.

Recommended Capacitor Values
48VDC Input: 470μF
280VDC Input: 22μF

L1:

To reduce C1 ripple current and output spike noise voltage, attach a normal choke coil to each module.

Recommended Inductance Values
48VDC Input: 3μH
280VDC Input: 15μH

Recommended Current Ratings
PH300S48-*: 11A
PH300S280-*: 2A
PH600S280-*: 4A

· All specifications are subject to change without notice.

Downloaded from Arrow.com.

C2, C3: 4700pF

Use a ceramic capacitor that has high withstand voltage to reduce the output spike voltage.

48VDC Input: 1.5kVAC or above

280VDC Input: 3kVAC or above

Select the capacitor from the above recommended components with high withstand voltage because the test voltage is applied to the capacitor during the withstand voltage test in some application contents.

Connect C2 between +Vin and baseplate and C3 between -Vin and baseplate as short as possible.

C4: 2.2μF

Also, use a ceramic capacitor to reduce the output noise voltage.

Attach the ceramic capacitor between +V and -V where less than 50mm from output terminal for PH300S.

For PH600S, attach the ceramic capacitor between +V and -V terminal as short as possible.

The output spike noise voltage could be changed for design of printed circuit board.

C5:

Use electrolytic capacitor(s) for stable operation.

Attach the electrolytic capacitor between +V and -V where less than 50mm from output terminal for PH300S.

For PH600S, attach the electrolytic capacitor between +V and -V terminals as short as possible. Recommend tighten the screws of load wire and C5 together.

Oscillation waveform could be shown at dropping down the output for characteristics of equivalent series resistance (ESR) of electrolytic capacitor and equivalent series inductance (ESL).

Moreover, note the output ripple voltage could be changed for design of printed circuit board.

In case input/output dynamically changes, it helps the fluctuation of output voltage by increasing the external capacitor value.

Vo \ Wo	300S	600S
3.3V	6.3V 4700μF	6.3V 10000μF
5V	10V 3900μF	10V 4700μF
12V	25V 1000μF	25V 2200μF
15V	25V 1000μF	25V 2200μF
24V	35V 560μF	35V 1000μF
28V	50V 470μF	50V 820μF
48V	50V *1 470μF × 2	50V *1 680μF × 2

*1 For 48V output model, use two 50V capacitors in series that have low impedance.

Table1-2 C5: Recommended Values of External Output Capacitor

Remarks:

1. Use an electrolytic capacitor that has excellent low impedance for temperature characteristic.
   (Equivalent electrolytic capacitor in LXY series manufactured by Nippon Chemicon)
2. Be aware of ripple current allowance of the electrolytic capacitor. Especially be aware it when the load current is in dynamics.

   The output voltage may be greatly varied in 300Hz - 2kHz frequency range at 0%←→100% of dynamic load condition. For less dynamic of the voltage, use a electrolytic capacitor which has better capacity than recommended electrolytic capacitor or keep the minimum load current more than 10% of nominal current.
   Contact us for the details.

C6:

In between input source and input line of PH300S, 600S series there are a switch and connectors etc. In case that the switch is on/off or plug in/off when the input is applying, attach an electrolytic capacitor, C6 as shown as Figure1-3.

Because in-rush current flows when the input is applied, confirm I^2t for the switch and fuse.

Recommended Values

48VDC Input : 100 - 470μF

280VDC Input :10 - 47μF

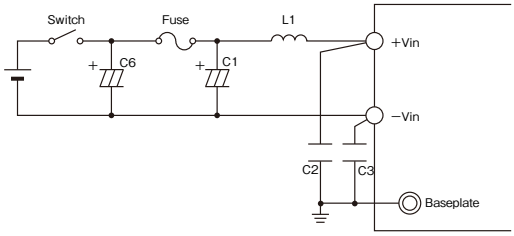

Figure1-3 Input Filter with Input Switch

If plural numbers of module will be connected in PH300S, PH600S series, attach an electrolytic capacitor, C6 as shown as Figure1-4.

Recommended Values

48VDC Input : 100 - 470μF

280VDC Input :10 - 47μF

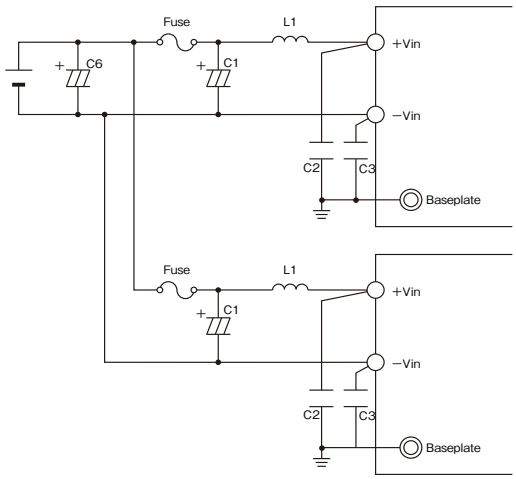

Figure1-4 Input Filter when Plural Power Modules are connected.

Downloaded from Arrow.com.

Reversed Connection of Input

An error of reverse (+,−electrodes) input may cause of damage of the power module. If there is possibility to connect the module conversely by accident, it is necessary to attach a protective diode and an input fuse.

The rating voltage of the diode shall be higher than input voltage, and the maximum in-rush current shall be higher than fuse.

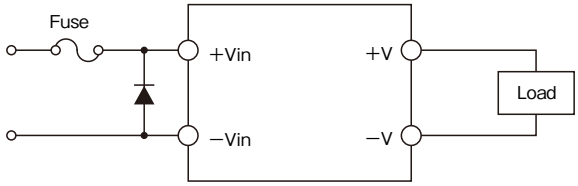

Figure1-5 Protection for Reversed Connection of Input

2 Output Voltage Range

Output voltage can be adjusted within±10% (3.3V, 5V, 48V : -10% to +20%) of the nominal voltage by adjusting the external trimmer (variable resistor). However, if the output voltage become over the above range, OVP activates.

There is a limit of input voltage shown in Figure2-1 when the output voltage trims high.

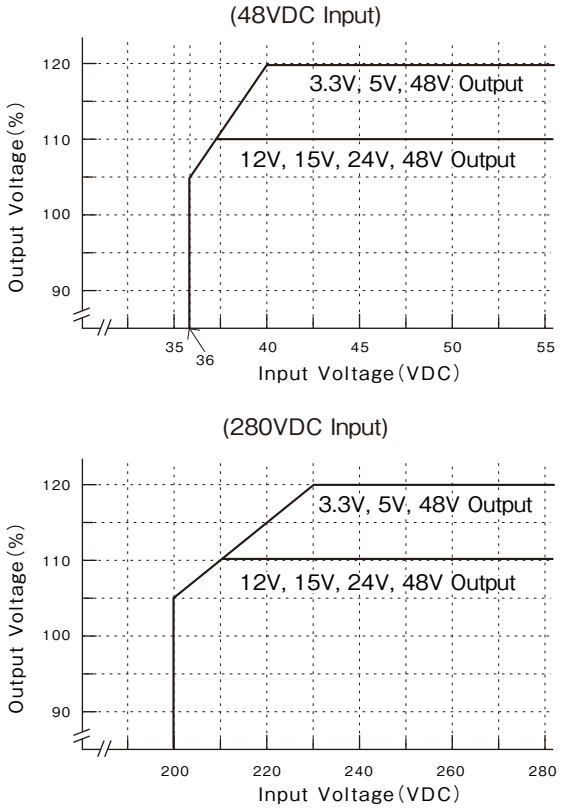

Figure2-1 Limit of Input Voltage

Connection method of external resistor (R1) and variable resistor (VR) is shown as follow.

	3.3V	5V	12V	15V	24V	28V	48V
Variable Range	− 10% + 20%		± 10%				− 10% + 20%
R1	4.7k	4.7k	30k	33k	68k	68k	220k
VR	2k	5k	5k	10k	10k	20k	30k

External Resistor: below±5% Tolerance
Variable Resistor: below±20% Tolerance
below 1% of Remain

Table2-1 External Resistor and Variable Resistor Output
-10%～ +20% Variable (3.3V, 5V, 48V)
±10% Variable(12V, 15V, 24V, 28V)

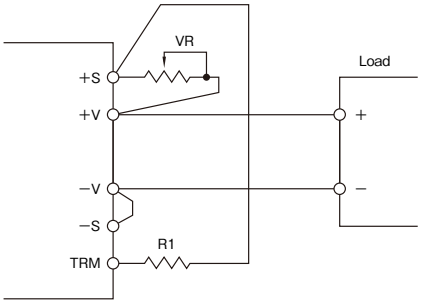

Figure2-2 Example Connection of External Resistance

For 48V output model, avoid to reduce the output voltage below -10% cause damage of the module

3 Maximum Output Ripple and Noise

Maximum output ripple and noise is measured by a method based on JEITA-9141.

The connection is shown as Figure3-1. Attach capacitors (C4: Ceramic Capacitor: 2.2μF, C5: Electrolytic Capacitor: Refer to Table1-2) 50mm from the output for PH300S and as short as possible to the output terminal for PH600. Also, attach a coaxial cable with JEITA attachment at the both side of C4 capacitor shown as Figure3-1. Oscilloscope shall be used at a range of 100MHz bandwidth.

The output ripple voltage and the output spike noise voltage may be changed for the design of printed circuit board.

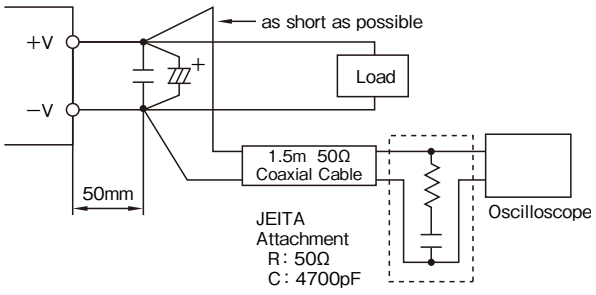

Figure 3-1 Measurement of Maximum Output Ripple & Noise (Example: PH300S)

・All specifications are subject to change without notice.

Downloaded from Arrow.com.

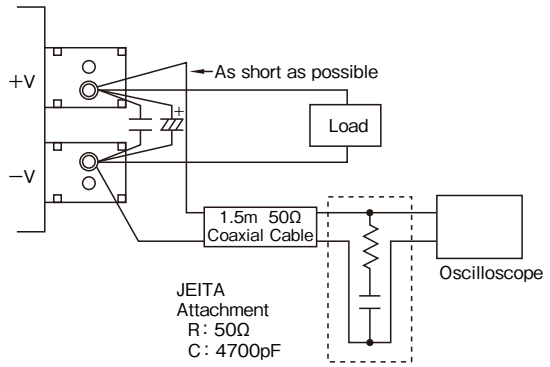

Figure 3-2 Measurement of Maximum Output Ripple & Noise (Example : PH600S)

4 Maximum Line Regulation

The maximum output voltage changes when the input voltage is slowly varied within the range. (Steady state)

5 Maximum Load Regulation

The maximum output voltage changed when the output current is slowly varied within the range. (Steady state)

6 Over Current Protection (OCP)

OCP function is provided in the power module.
When short or overload condition is released, the output will be automatically recovered. This setting value is fixed and impossible to change externally.
Be aware that the power module could be damaged in some thermal conditions when short or overloaded condition is continuously carried on.

7 Over Voltage Protection (OVP)

OVP function is provided in the power module.
This setting value is a value for the nominal output voltage. It is fixed and impossible to change externally.
When OVP function activates, the output will shut down. The output can be recovered by reset of ON/OFF Control terminal to low at once or reapplying input after input voltage bring down to less than the following values. Time reset of ON/OFF control terminal is more than 100ms.
To check OVP function, apply an external voltage that is limited to upper limit of maximum OVP range. Refer to specification for OVP range. Avoid to apply over voltage not to damage the unit.

Input Voltage to release OVP
48V Input: less than 25VDC
280V Input: less than 150VDC

8 Thermal Protection

Thermal protection is provided in the power module. It prohibits abnormal rise of ambient temperature and internal temperature of power supply, and the output will shut down. Trip point of thermal protection is 105℃ - 130℃ of baseplate temperature.
The output is recovered by reapplying the input voltage after the input shut down (same as OVP) when the temperature is cooled down enough or resetting ON/OFF control terminal.

9 Remote Sensing (+S,-S Terminal)

Remote sensing which compensates voltage drop by wiring from output terminal to load terminal in power supply is equipped.
If remote sensing is unnecessary to use (using local sensing), directly connect +S and +V terminals and -S and -V terminals as short as possible.
Use within the maximum output power range with either compensated voltage range of line drop (voltage drop by wiring) is in output range or voltage between -V and -S is 2V. Also, reduce noise affects by using shielded wire, twisted wire, or parallel pattern as remote sensing wire.

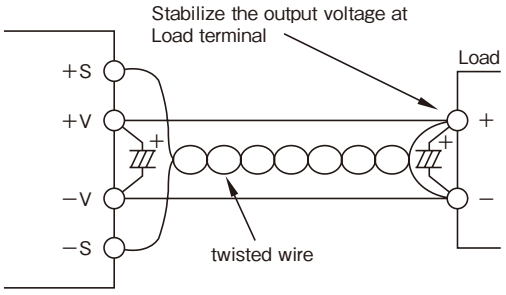

Figure9-1 Remote Sensing at Use

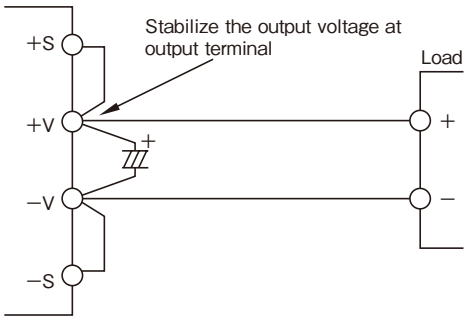

Figure9-2 Remote Sensing Not in Use

PH

Downloaded from Arrow.com.

10 ON/OFF Control (CNT Terminal)

Without turning the input on and off, the output can be enabled and disabled by CNT function. The control circuit is at input (primary) side, and CNT terminal pin is used. Use -Vin terminal as ground of CNT terminal.
If this function is unnecessary, shorten between CNT terminal and -Vin terminal.

1) Maximum applied voltage to CNT terminal is 35V, and the maximum reversed voltage is -0.7V. Also, the current source of CNT terminal is approximately 0.5mA.
Contact 0.1μF capacitor in between CNT and -Vin terminals as short as possible if lead wires are much longer.

2) CNT terminal can be managed by opening and closing the contact of a switch or relay and ON/OFF control of photo coupler.
Insulate the ON/OFF control circuit by relay or photo coupler.
＊In use of photo coupler, connect the transistor side between CNT and -Vin as short as possible.

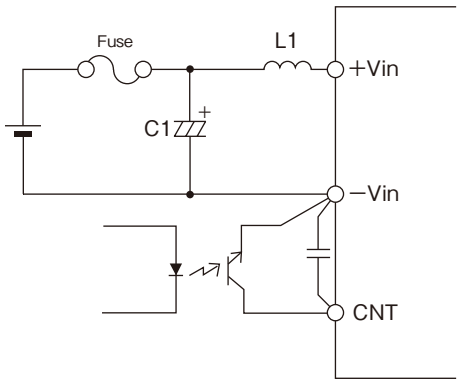

Figure10-1 Connection of CNT Terminal

CNT Level	Output Status
H (over 4V) or Open	OFF
L (below 0.8V) or Short	ON

Table10-1 ON/OFF Control Mode

− Caution −
Inside of power module could be damaged at applying input without or improper contact of -V connection. For an example, the current flows in abnormal path such as +Vin to CNT terminal leads CNT terminal blow out
To avoid such a damage, ensure all the terminals are connected before input is applied.

11 CS Signal (CS)

Negative voltage based on -Vo is generated for CS terminal. Using this signal, it is possible to operate in parallel by attaching parallel operating control circuit externally.
Refer to "Parallel Operation" Application Note in the instruction manual for details.

12 Series Operation

Series operation is available for all models of PH300S, 600S series.
Contact us for details of the maximum unit number of possible connections.

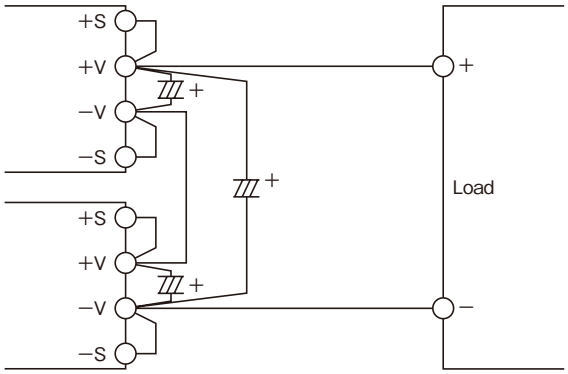

Figure12-1 Series Operation in High Output Voltage

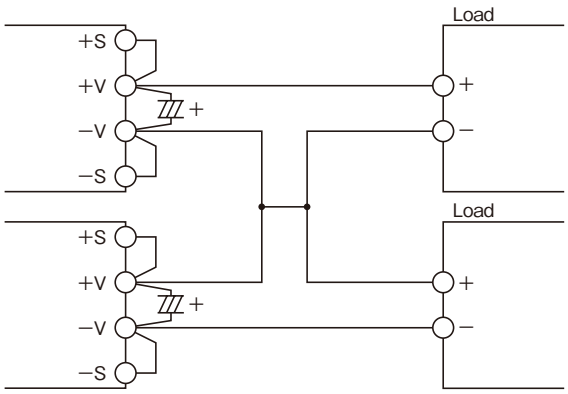

Figure12-2 ±Output Series Operation

13 I.O.G. Signal (IOG Terminal)

Using IOG (Inverter Output Good Signal) terminal, it is possible to monitoring good/not good operation in the power module. This monitoring signal is located at secondary (output) side and is the open collector output.
At normal inverter operation, the IOG shows LOW (maximum sink current 5mA and maximum applied voltage 35V).
Ground of IOG terminal is -S terminal.
Be aware IOG signal could be unstable in the following cases.

- Active OCP
- Low load in parallel operation
- Sudden change of load

Contact us for the details.

14 Operating Temperature

Installation direction is freely chosen, but consider air convection not to shut heat up in power module. Decide installation direction of printed circuit board and dispositions of components for better air convection in both forced air or convection cooling.
To keep the baselate temperature below 100℃ in actual

・All specifications are subject to change without notice.
Downloaded from Arrow.com.

operation, it is possible to operate. Note the output derating is necessary in case that the baseplate temperature is over 90℃ for PH300S and over 85℃ for PH600S.
Refer to "Thermal Design" in Application Notes in the instruction manual for details.

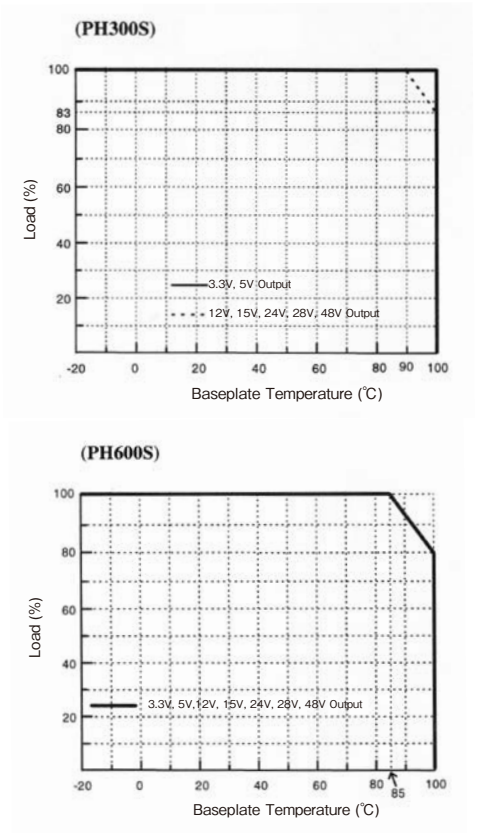

Figure14-1Output Derating Curve

1) Load rate (%) is expressed as higher rate for maximum output power or maximum output current.
2) Maximum baseplate temperature is 100℃. Confirm it at the measuring point shown as Figure14-2 in the worst operating condition.

(PH300S)

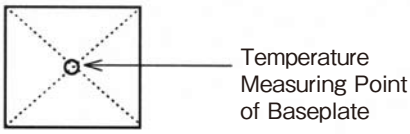

(PH600S)

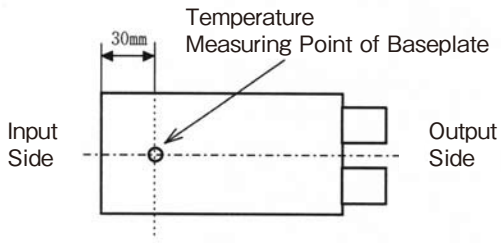

Figure 14-2 Temperature Measurement Point of Baseplate

Recommend to use the baseplate temperature to derate for better improvement of converter reliability.

15 Operating Humidity

Note built-up condensation may cause of abnormal operation or damage of the power module.

16 Storage Temperature

Note that radical temperature changes can be a cause of condensation and affect other harmful problems to each terminal soldering.

17 Storage Humidity

To storage under high temperature and humidity conditions, it makes each terminal oxidize. Hence, the quality of the soldering would be worse.

18 Cooling Method

Various cooling method can be used since the operating temperature is specified by baseplate temperature.
Refer to "Thermal Design" in Application Notes in the instruction manual for details in of thermal design.

19 Baseplate Temperature vs. Output Regulation

Output voltage ratio is the ratio when only operating baseplate temperature changes.

20 Withstand Voltage

The power module is designed to withstand 2.5kVAC for input - baseplate and 3kVAC for input - output (1.5kVAC for input - baseplate and 1.5kVAC for input - output for 48VDC input model) for 1 minute. Set up the limit value of withstand voltage tester as 20mA in case of incoming goods test and so on.
Also, it is designed to withstand 500VDC for output - baseplate for 1 minute. The applied voltage must be direct voltage. In a test with alternating voltage, the power module will be damaged, therefore, do not test with alternating voltage.
Do not apply the test voltage from the beginning. It shall be gradually increased from zero and also be gradually decreased for shut down. Especially using withstand voltage with timer, impulse several times as the applied voltage occurs when the switch is off by the timer, and the power module would be damaged.
Shorten at the output side as shown in the following drawing.

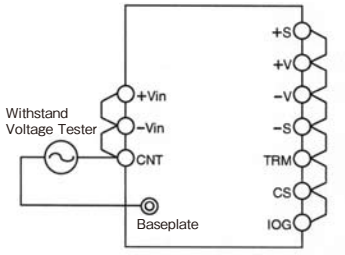

2.5kVAC 1 minute (20mA)
(48VDC Input Model: 1.5kVAC)

Figure20-1 Withstand Voltage Test for Input - Baseplate

PH

Downloaded from Arrow.com.

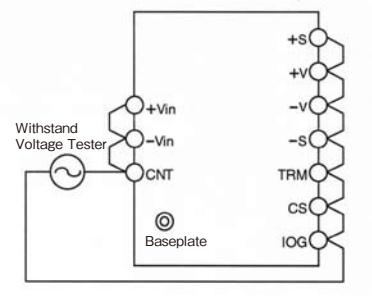

3kVAC 1 minute (20mA)
(48VDC Input Model: 1.5kVAC)

Figure20-2 Withstand Voltage Test for Input - Baseplate

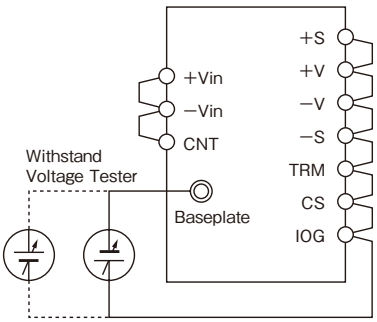

500VDC 1 minute

Figure20-3 Withstand Voltage Test for Output - Baseplate

Test must be curried out with direct current.

21 Isolation Resistance

Use DC isolation tester (MAX. 500V) to measure the isolation resistance between output and baseplate. The isolation resistance is more than 100MΩ at 500VDC. Note that some isolation testers would make high voltage pulse occur when the applied voltage is varied. Ensure the tester fully discharge after the test.

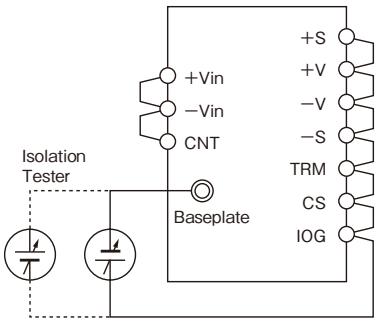

Over 100MΩat 500VDC

Figure21-1 Isolation Test

22 Vibration

Refer to "Installation Application Notes" in the instruction manual.

23 Shock

Value is for conditions of our shipping.

24 Others

The performance of a system with Power Module is influenced according to various conditions -- PCBs, chassis, mechanics, heat dissipation. Please evaluate actual products, and confirm its performance. (For details, please refer Power Module Application Note.)

- Please refer to "Power Module Application Note" for thermal design and mounting direction.

PH

4. Before You Think The Module is damaged

Confirm the following items before you think the module is damaged or failed.

1) No Output
- Is the rated input voltage supplied?
- Is the remote sensing terminal connected correctly?
- Is the ON/OFF control terminal connected correctly?
- For adjusted output, is the variable resistance network set up and connected correctly?
- Is there any trouble with the connected load?

2) High Output Voltage
- Is the remote sensing connected correctly?
- For adjusted output, is the variable resistance network set up and connected correctly?

3) Low Output Voltage
- Is the rated input voltage supplied?
- Is the remote sensing terminal connected correctly?
- Is it measured at sensing point?
- For adjusted output, is the variable resistance network set up and connected correctly?
- Is there any trouble with the connected load?

4) Over Load Regulation or Over Input Regulation
- Is the rated input voltage supplied?
- Are the input and output terminals connected correctly?
- Is it measured at sensing point?
- Are input and output wires too thin?

5) High Output Ripple
- Is it same measuring method as the instruction manual?
- Is the input ripple voltage within the specification?

· All specifications are subject to change without notice.

Downloaded from Arrow.com.

3. PH300S, 600S Parallel Operation

1 INTORDUCTION

PH300S, 600S series are applicable to operate in parallel with an external circuit using CS signal terminal.
There are 2 different kinds of parallel operation.

(1) Parallel Operation
It is possible to enhance the output when load current can not be supplied by only one power module or to improve the reliability by derating the output power of each module.

(2) N+1 Parallel Redundant Operation
For power supply that is required high reliability, it is possible to achieve the requirement by using N+1 units of power modules for the load of N units.
In N+1 units of parallel operation, even through one of the power modules is failed the performance of the system shall be maintained because the other units cover the failure module and share the load currents.

2 PRECUATIONS

There are several basic cautions and warnings in parallel operation of PH300S, 600S series.

- Externally attach a control circuit of parallel operation in each power module.
- Available to use 11 units maximum of power modules in identical model (same output power and voltage.)
- Use specified components followed by explanations of basic connection in Instruction Manual at input and output side.
- Set the accuracy of the output voltage within ±1% to adjust the output voltage.
- Set the maximum load current below 95% of sum of the nominal output current values.
- Use same length and size of output load lines between power module and load in parallel connection.

3 CONNECTION CIRCUIT OF PARALLEL OPEARTION

(a) Basic Connection Circuit of Parallel Operation

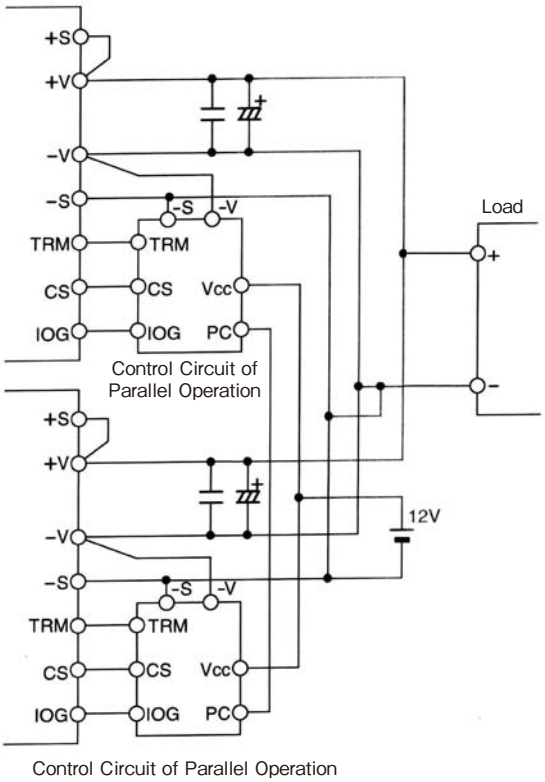

Control Circuit of Parallel Operation

Figure3-1 Basic Connection Circuit of Parallel Operation

Basic circuit connection is shown in Figure3-1. For control circuit of parallel operation, individually connect a circuit shown in Figure3-2 to each PH300S, 600S series of power module of parallel operation.

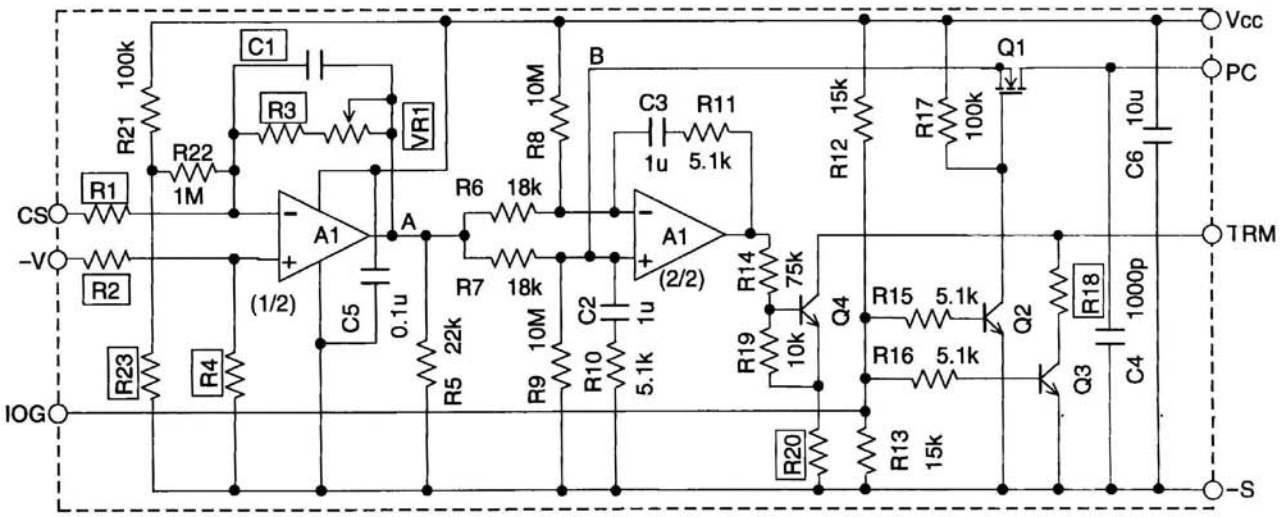

Figure3-2 Control Circuit fo Parallel Operation

· All specifications are subject to change without notice.

Downloaded from Arrow.com.

(b) Control Circuit of Parallel Operation

(1) Parallel Operation

In case that the output of PH modules are connected in parallel without control circuit of parallel operation, current starts to flow from a power module with higher output voltage as increasing the load current. This state may be continued until the output voltage drops to be equal to the other modules by dynamic load or descending voltage in load wire or high output module becomes over current protection condition and output voltage decreases. Do not operate in such conditions because the load may be unbalanced and charges to only one power module.

To attach control circuits of parallel operation, the load current in each power module can be monitored, and the output voltage of modules with less load current may be increased. Then the load current may be balanced.

(2) Terminal Explanation of Figure3-2

CS

CS terminal of each module shall be connected. Shorten a wire length from CS terminal to A1 input terminal as much as possible to avoid noise affects. Unavoidably the wire is long, then attach a capacitor (approx. 1mF) between CS terminal and -V terminal.

Negative voltage is generated at CS terminal in proportion to the output current. Figure3-3 shows an example of characteristics of CS terminal voltage (when CS terminal is opened). Under full load condition CS terminal voltage may be approximately -20mV to -60mV based on -V terminal (-100mV to -300mV for 28V, 48V output model).

CS terminal voltage can be expressed as $Vcs = -R_i \times I_o$ by descend of internal voltage of power module.

R_i : Components of Resistor at internal output side of PH module

I_o : Output Current of PH module

Temperature coefficient of R_i is almost same resistance rate of copper and approximately 4000 ppm/℃ .

For CS terminal voltage is a small voltage in negative polarity, Op-Amp A1 (1/2) is amplifier inverting shown as Figure3-2. For all of PH modules to be in parallel operation, VR1 shall be adjusted to equalize with the voltage at A point at full load. Setting voltage of A point is 3V to 5V, and the setting accuracy is within±2%. Voltage adjustment of A point can be adjusted with PC terminal of open circuit.

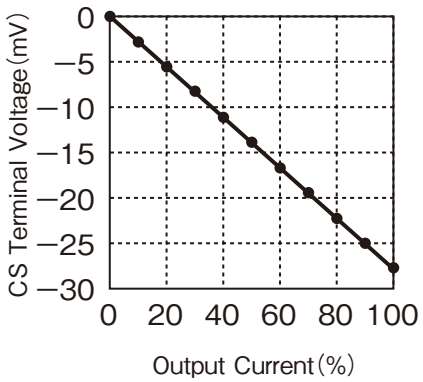

Figure3-3 Characteristics of Output Current vs. CS Terminal Voltage (Example: PH300S48-5)

−V

It is signal ground of CS terminal voltage. Apart from the wire to the load, it shall be connected near output terminal. Equalize connection method and disposition to -V terminal in each module.

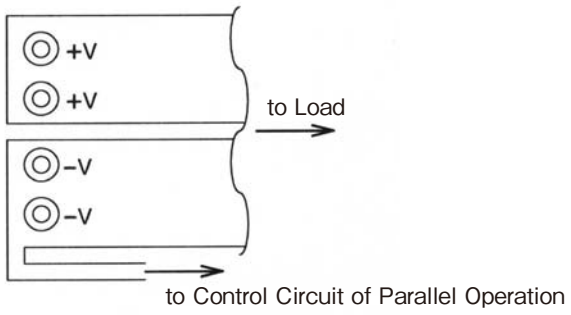

Figure3-4 -V Wiring Example

IOG

IOG terminal in each module shall be connected. IOG terminal in PH module generates LOW output with open collector output at normal operation. In control circuit of parallel operation, connection of PC terminal would be cut off by turning off MOSFET Q1 to use redundant operation when IOG terminal of PH module abnormally generates HIGH output.

Vcc

It is power supplement terminal to control circuit of parallel operation. Connect 12±1V of stable DC power supply between -S terminal and Vcc terminal. Control circuit of parallel operation in out of the above Vcc voltage range may cause mis-operation such as unstable load balance.

For models more than 12V output voltage, Vcc can be supplied by +V shown in Figure3-5. Current consumption per module in control circuit of parallel operation is approximately 10mA. Attach a capacitor (C6: 10mF) for bypass noise of power supply between Vcc terminal and -S terminal in each control circuit of parallel operation.

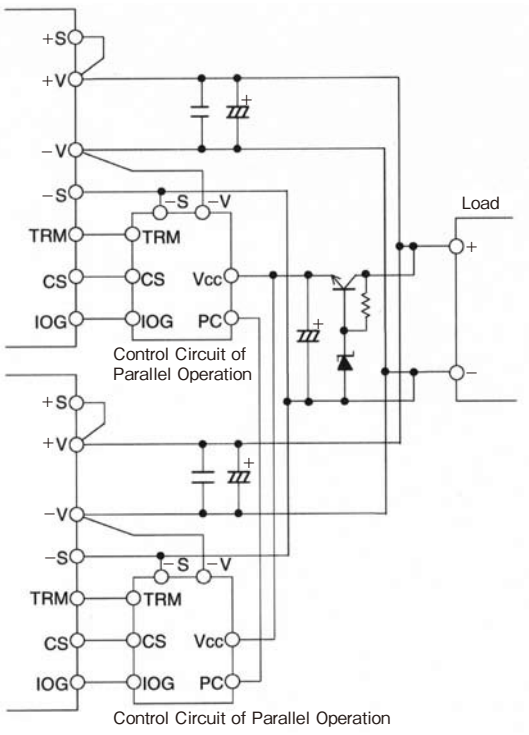

Figure3-5 Example: Vcc is supplied by +V

· All specifications are subject to change without notice.

Downloaded from Arrow.com.

PC

It is control terminal for parallel operation. It is connected in all of PH modules in parallel operation. Shorten a wire between PC terminals as much as possible. Unavoidably the wire is long, then use twisted pair wire or shielded wire to avoid noise affects.

When PC terminals in parallel operation are mutually connected, voltage of all PC terminal is the average of PC terminals at open circuit. +Input side of internal Op-Amp A1(2/2) of parallel operation in proportion to the output current in the module is supplied. At -input, voltage in proportion to average of total output currents of all the module is supplied. This Op-Amp makes output voltage of PH modeles with less output current risen by TRM terminal and activates output current in PH module balance.

TRM

TRM terminal in each PH module is connected. Connecting TRM terminal, control circuit of parallel operation adjusts the output voltage of the module and balance the output current.

-S

It is GND level of control circuit of parallel operation. Internal circuit activates based on -S. It shall be connected to -S terminal of PH module. -S connection between modules is to be connected one point of earth to avoid electrical potential difference of each -S terminal of PH module by voltage drop due to output current.

(3) Component Selection

Refer to following items to select components in control circuit of parallel operation

Op-Amp (A1)

Use an Op-Amp which has singular power operation and its input common mode voltage range from 0V. Moreover, it shall be low input off set voltage. For an example, uPC842C(NEC) is one of available Op-Amp.

Transistor・FET (Q1-Q3)

FET (Q1) uses as analog switch. Use N channel small signal MOS-FET for general purpose (rated more than 25V, 50mA.)

Use NPN small signal type for transistor (Q2-Q4) (rated more than 25V, 50mA.)

Capacitor (C1-C6)

For choosing capacitor(s), refer to values expressed in Figure3-2 and values for each component shown in Table3-2. Use film capacitor or ceramic capacitor which has good temperature characteristics.

The tolerance shall be less than ±5% .

Resistor (R1-R23, VR1)

For choosing capacitor(s), refer to values expressed in Figure3-2 and values for each component shown in Table3-2. The tolerance shall be less than ±5% .

Values for each Component

Values of Capacitor C1, Resistor R1-R4, R18, R20, R23, and Variable Resistor VR1 depend on model. Refer to Table3-1 for components in PH300S280-*and Table3-2 for components in PH600S280-*.

PH300S280, PH30048

	3.3V	5V	12V	15V	24V	28V	48V
C1	1000p	1000p	1000p	330p	330p	1000p	330p
R1	1.2k	1.2k	1.2k	2.7k	5.1k	7.5k	10k
R2	1.2k	1.2k	1.2k	2.7k	5.1k	7.5k	10k
R3	150k	150k	300k	430k	750k	470k	750k
R4	180k	180k	360k	470k	820k	510k	820k
R18	9.1k	30k	30k	30k	30k	30k	30k
R20	5.6k	12k	15k	15k	15k	15k	15k
R23	18k	18k	11k	4.7k	2.4k	1.8k	360k
VR1	50k	50k	100k	100k	200k	100k	200k

Table3-1 PH300S280, PH300S48
Values for components in Control Circuit of Parallel Operation

PH600S280

	3.3V	5V	12V	15V	24V	28V	48V
C1	1000p	1000p	1000p	330p	330p	1000p	1000p
R1	1.2k	1.2k	1.2k	2.7k	5.1k	7.5k	10k
R2	1.2k	1.2k	1.2k	2.7k	5.1k	7.5k	10k
R3	180k	180k	220k	360k	510k	200k	390k
R4	200k	200k	270k	390k	560k	240k	430k
R18	9.1k	30k	30k	30k	30k	30k	30k
R20	5.6k	12k	15k	15k	15k	15k	15k
R23	18k	18k	11k	4.7k	2.4k	1.8k	360k
VR1	50k	50k	100k	100k	200k	100k	100k

Table 3-2 PH600S280
Values for components in Control Circuit of Parallel Operation

unit : C[F], R[Ω]

Others

Values of capacitors and resistors are recommended values to operate power modules which have components used in basic connection shown in Application Note. These values may sometimes differ from the optimum values because of components at input and output side and wiring environment. Confirm the performance of the circuit using actual module when each value is determined.

4 Cautions for Wiring

Wiring from Input of A1 (1/2) to CS and -V terminals shall be minimum length. Be aware of noise affects for A1 (1/2) which makes small voltage amplify tens to hundreds times.

Also, load wire to united point of each load wire from output of the power supply shall be minimum length too. Long wiring can cause mis-operation of control circuit of parallel operation. Unavoidably the wire is long, then attach an approx. 1mF capacitor between -V terminal and -S terminal.

If -S wiring is close by and parallel to load wire, use shielded wire or twisted pair wire to connect -S to -V and also -S itself. Without any measure, electrode of -S may be unstable by influences of load wire and mis-operation may be occurred.

Downloaded from Arrow.com.

5 Parallel Operation

(a) Parallel operation to enhance the output and to improve the reliability

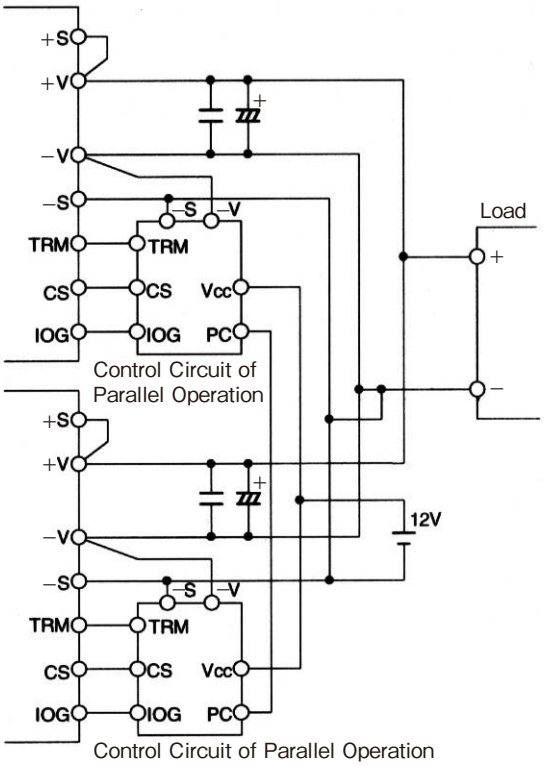

Figure5-1 Parallel Operation

(b) Parallel Operation programmed output voltage

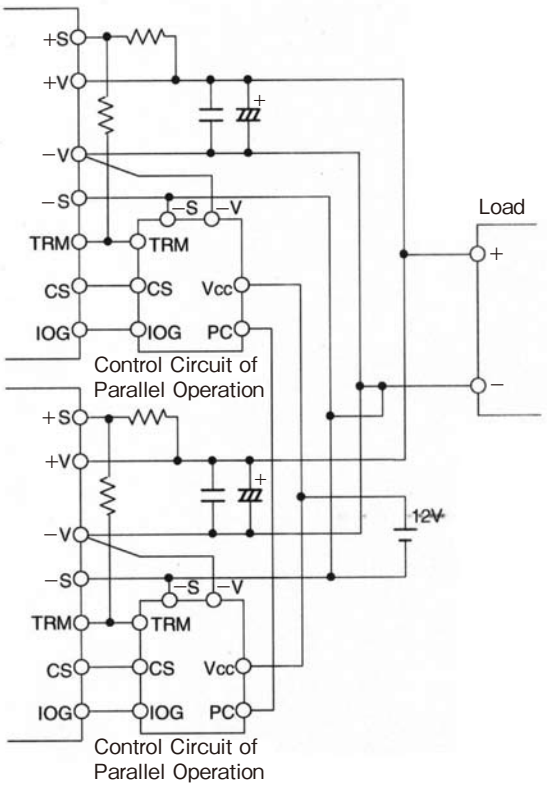

Figure5-2 Parallel Operation at programmed ouput voltage

(c) Parallel Operation with adjustable output voltage

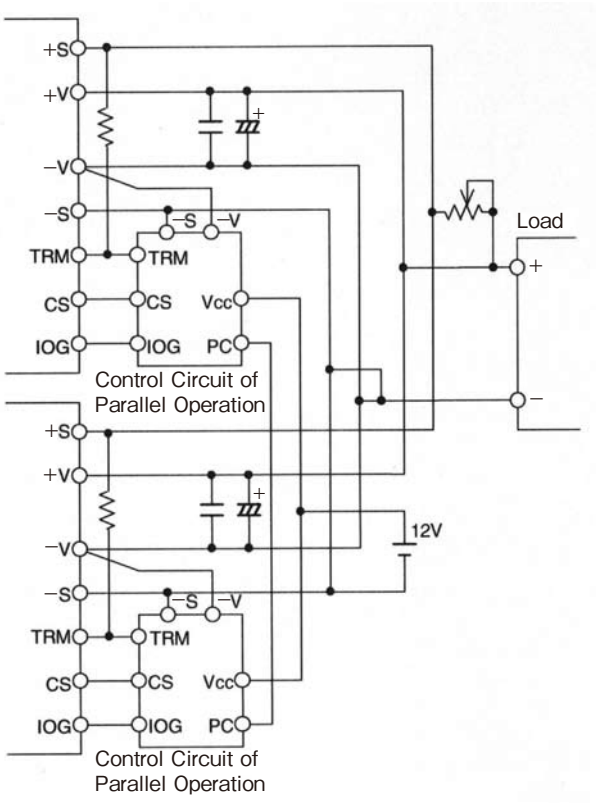

Figure5-3 Parallel Operation with adjustable output voltage

6 N+1 Redundant Operation

(a) N+1 Redundant Operation

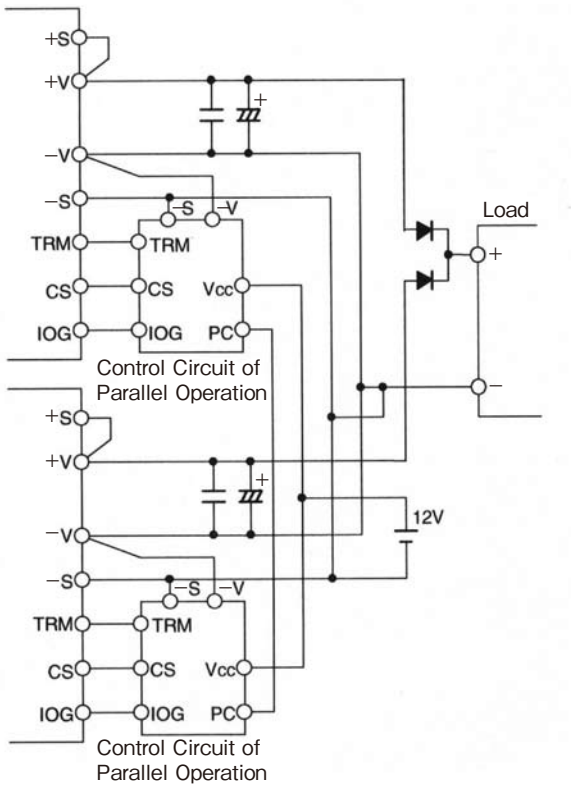

Figure6-1 N+1 Redundant Operation

PH

· All specifications are subject to change without notice.

Downloaded from Arrow.com.

(b) Connection of N+1 Redundant Operation at programmed output voltage within the range

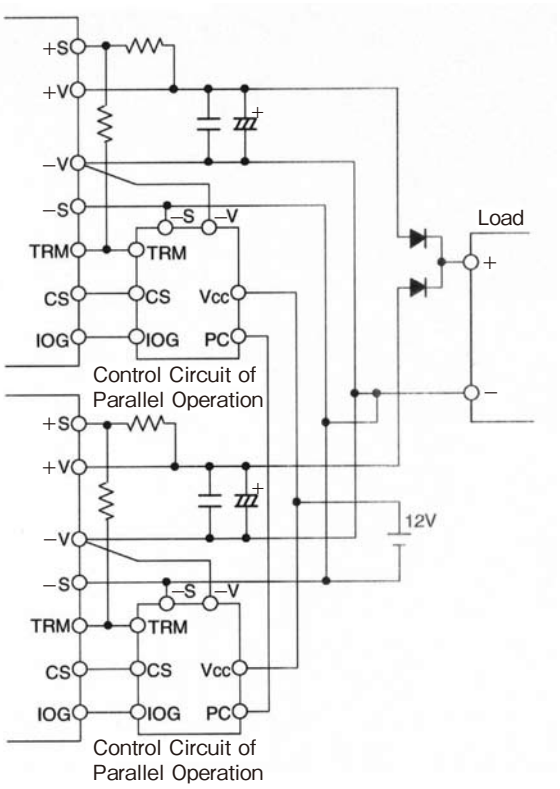

Figure6-2 N+1 Redundant Operation at programmed output voltage (fixed)

(c) N+1 Redundant Operation with adjustable output voltage

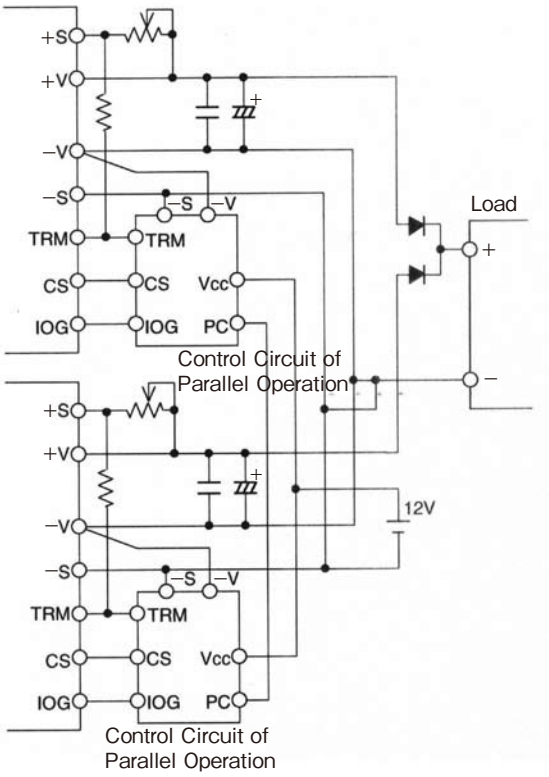

Figure6-3 N+1 Redundant Operation with adjustable output voltage

PH

Downloaded from Arrow.com.

TDK·Lambda

Downloaded from Arrow.com.