60W Single and Dual Output DC-DC converters

https://product.tdk.com/en/power/pxd
www.emea.lambda.tdk.com/pxd




Industrial


Test


COMM


Broadcast

The PXD60 industrial DC-DC converters feature wide 4:1 input ranges in a compact 2 x 1" (50.8 x 25mm) industry standard package. With efficiencies up to 92%, the PXD60 series typically draws a low 3mA input current when the remote on/off function is used, prolonging battery life for portable equipment. The modules have six-sided shielding to reduce radiated noise.

Features	Benefits
• Wide 4:1 Input Range	• Supports Dual 12/24V or 24/48V System Voltages
• Compact 2" x 1" Industry Package	• Less Board Area Needed
• Certified to IEC/UL/CSA/EN 62368-1	• Suitable For Industrial Applications
• Low No Load Power Consumption	• Longer Battery Life
• Six Sided Shielding	• Reduces Radiated Noise

Model Selector

Model	Input Voltage (V)	Output Voltage (V)	Maximum Current (A)	Maximum Power (W)	No Load Input Current (mA)	Efficiency (%)	Maximum Load Capacitance (uF)
Single Outputs							
PXD60-24WS3P3	9 - 36	3.3	12	39.6	10	90	32,000
PXD60-48WS3P3	18 - 75	3.3	12	39.6	10	90	32,000
PXD60-24WS05	9 - 36	5	12	60	10	92	30,000
PXD60-48WS05	18 - 75	5	12	60	10	92	30,000
PXD60-24WS12	9 - 36	12	5	60	10	92	5,850
PXD60-48WS12	18 - 75	12	5	60	10	92	5,850
PXD60-24WS15	9 - 36	15	4	60	10	92	3,900
PXD60-48WS15	18 - 75	15	4	60	10	92	3,900
PXD60-24WS24	9 - 36	24	2.5	60	10	92	2,000
PXD60-48WS24	18 - 75	24	2.5	60	10	91	2,000
Dual Outputs							
PXD60-24WD12	9 - 36	±12	±2.5	60	10	91	±3,900
PXD60-48WD12	18 - 75	±12	±2.5	60	10	91	±3,900
PXD60-24WD15	9 - 36	±15	±2	60	10	91	±2,400
PXD60-48WD15	18 - 75	±15	±2	60	10	91	±2,400
PXD60-24WD24	9 - 36	±24	±1.25	60	10	91	±1,000
PXD60-48WD24	18 - 75	±24	±1.25	60	10	91	±1,000

PXD	60	-24W	S	05	-N	-HC2

60	60W Output Power

-24W	9 - 36V input
-48W	18 - 75V input

S	Single Output
D	Dual Output

3P3	3.3V Output Voltage
05	5V Output Voltage
12	12V Output Voltage
15	15V Output Voltage
24	24V Output Voltage

Blank	Positive Logic Remote On/Off
-N	Negative Logic Remote On/Off

Blank	No heatsink fitted
-HC1	Factory installed heatsink with 7.62mm fins
-HC2	Factory installed heatsink with 12.7mm fins
-HC3	Factory installed heatsink with 20.32mm fins

Preferred model

Example: PXD60-24WS3P3-N-HC2

Related Products

Type	Part Number	Description
Heatsink kit (User installation)	ACC-PX2X1-HC01	HC1 heatsink, thermal pad and 2 clips
Heatsink kit (User installation)	ACC-PX2X1-HC02	HC2 heatsink, thermal pad and 2 clips
Heatsink kit (User installation)	ACC-PX2x1-HC03	HC3 heatsink, thermal pad and 2 clips

Specifications

Model		PXD60
Input		
Input Voltage Range	-	See model selector table
Input Surge Voltage	Vdc	-24W models: 50, -48W models: 100. (1s maximum)
Input Shutdown Voltage	Vdc	-24W models: 7 - 8.8, -48W models: 15 - 17.5
Start-up Time	ms	60 typical
No Load Current Consumption	-	See model selector table. Typically 3mA if remote on/off is activated
Efficiency	-	See model selector table
Conducted & Radiated EMI	-	EN55032. See instruction manual on website for external circuitry
Immunity	-	See immunity section
Safety Certifications and Markings	-	IEC/UL/CSA/EN62368-1, CE Mark and UKCA Mark

Immunity

Test	Standard	Test Level	Criteria	Notes
ESD	EN61000-4-2	Air ± 8kV and Contact ± 6kV	A	-
Radiated Susceptibility	EN61000-4-3	20V/m	A	-
Electrical Fast Transient Burst	EN61000-4-4	± 2kV	A	With an input filter of two 220uF capacitors and a TVS (SMDJ58A for PXD60-24W or SMDJ120A for PXD60-48W)
Surge	EN61000-4-5	± 2kV	A	
Conducted Susceptibility	EN61000-4-6	10 Vrms	A	-
Magnetic Fields	EN61000-4-8	100A/m continuous; 1000A/m 1s	A	-

Specifications

Model		PXD60
Output		
Output Voltage Tolerance	%	±1
Output Voltage Adjustment	%	Single output only. 3.3V-12V, 48V: ±10, 15V-24V: -10/+20, No adjustment on dual output models.
Switching Frequency	kHz	225 - 275
Line Regulation	%	±0.2
Load Regulation	%	Single output: ±0.5 Dual output: ±1
Cross Regulation	%	Dual output: ±5 (Asymmetrical 25% to 100% load change)
External Load Capacitance	-	See model selector table
Ripple & Noise (1)	mVp-p	Single output: 3.3-5V outputs: <100, 12-15V outputs: <150, 24V outputs: <200
Temperature Coefficient	%/°C	±0.02
Minimum Load	-	No minimum load required
Transient Loading	-	250us recovery time for a 25% load change
Overcurrent Protection	%	150, hiccup mode
Overvoltage Protection	V	Zener clamp method. 3.3 V: 3.9, 5V: 6.2, 12V: 15, 15V: 20, 24V: 30 (typical)
Overtemperature Protection	°C	Shutdown, typically 115
Remote Sense		No remote sense
Remote On/Off	-	Positive Logic (Blank): ON: Open or 3-12V, OFF Short or 0-1.2V Negative Logic (-N suffix): ON: Short or 0-1.2V, OFF: Open or 3-12V
Environmental		
Operating Temperature (2)	°C	-40 to +105 - see derating section and instruction manual on website (Confirm case temperatures in end system)
Maximum Case Temperature	°C	105 (Overtemperature Protection 115)
Thermal Impedance	°C/W	No heatsink: 10.8, -HC1: 8.3, -HC2: 7.0, -HC3: 5.7
Storage Temperature	°C	-55 to +125
Humidity (non condensing)	%RH	5 - 95 (Operating & Storage)
Cooling	-	Convection or forced air
Altitude	m	5,000 (operating)
Withstand Voltage (For 1 minute)	Vdc	Input to output to case 1,600
Isolation Capacitance	pF	<2200
Vibration (Operating)	-	MIL-STD-810F
Thermal Shock	-	MIL-STD-810F
Other		
Weight (Typ)	g	33 (no heatsink fitted)
Size (LxWxH)	mm	50.8 x 25.4 x 10.2 (no heatsink fitted)
Size (LxWxH)	Inches	2 x 1 x 0.4 (no heatsink fitted)
Case Material	-	Copper
MTBF - MIL-HDBK-217F, Full Load	Hours	858,200
Warranty	Years	3

Notes
See website for detailed specifications, test methods and installation manual
(1) Measured with a 20MHz bandwidth oscilloscope across an X7R multi-layer ceramic capacitor. 10uF/25V for 3.3 to 15V outputs, 4.7uF/50V for 24V output models
(2) The case temperature must be confirmed in end application. The product rating may be affected by airflow direction and physical obstructions near the module.

Derating Section

PXD60-48WS12 - Derating Diagram

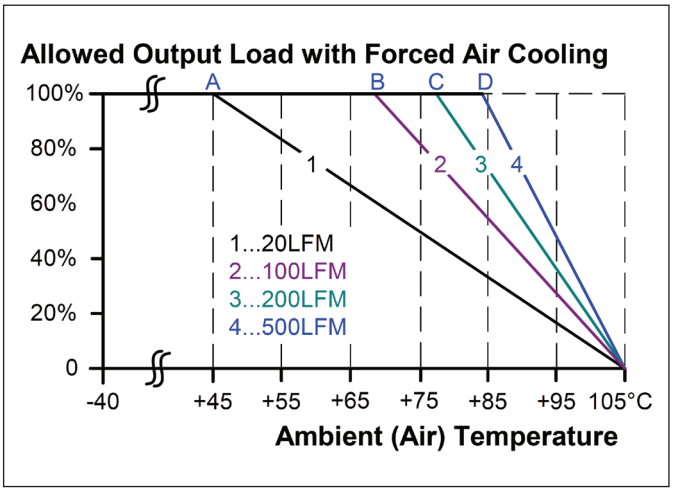

PXD60-48WS12 - Derating Diagram

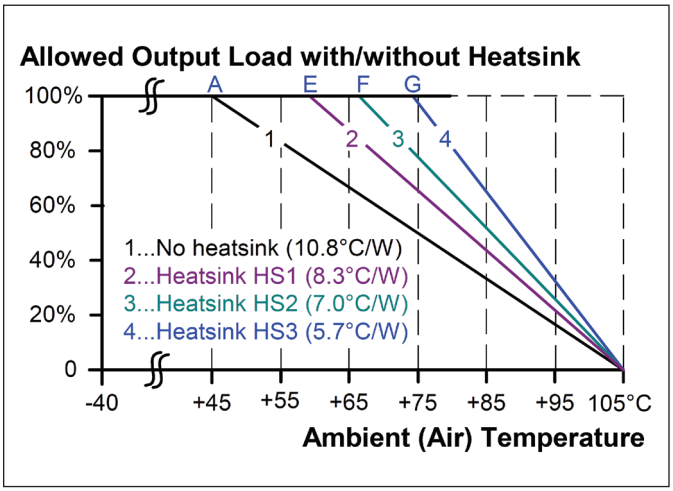

The required power reduction depends on the individual device. The example shows the PXD60-48WS12. The points A to G describe the temperatures at which the power reduction starts. For other models, these points can be taken from the table.

Derating Starting Point	A 20LFM (convection)	B 100LFM	C 200LFM	D 500LFM	E with HC1	F with HC2	G with HC3
PXD60-24WS3P3	61°C	77°C	85°C	89°C	71°C	77°C	82°C
PXD60-24WS05	50°C	70°C	80°C	85°C	62°C	69°C	76°C
PXD60-24WS12	43°C	67°C	77°C	82°C	58°C	65°C	72°C
PXD60-24WS15	51°C	72°C	80°C	85°C	64°C	70°C	77°C
PXD60-24WS24	51°C	72°C	80°C	85°C	64°C	70°C	77°C
PXD60-24WD12	39°C	65°C	75°C	81°C	55°C	62°C	70°C
PXD60-24WD15	50°C	71°C	80°C	84°C	62°C	69°C	76°C
PXD60-24WD24	48°C	70°C	78°C	84°C	61°C	68°C	75°C
PXD60-48WS3P3	61°C	77°C	85°C	89°C	71°C	77°C	82°C
PXD60-48WS05	50°C	70°C	80°C	85°C	62°C	69°C	76°C
PXD60-48WS12	45°C	68°C	77°C	84°C	59°C	66°C	73°C
PXD60-48WS15	44°C	67°C	77°C	82°C	58°C	65°C	73°C
PXD60-48WS24	45°C	68°C	78°C	83°C	59°C	66°C	73°C
PXD60-48WD12	39°C	65°C	75°C	81°C	55°C	62°C	70°C
PXD60-48WD15	45°C	68°C	78°C	83°C	58°C	66°C	73°C
PXD60-48WD24	48°C	70°C	79°C	84°C	61°C	68°C	75°C

Outline Drawing

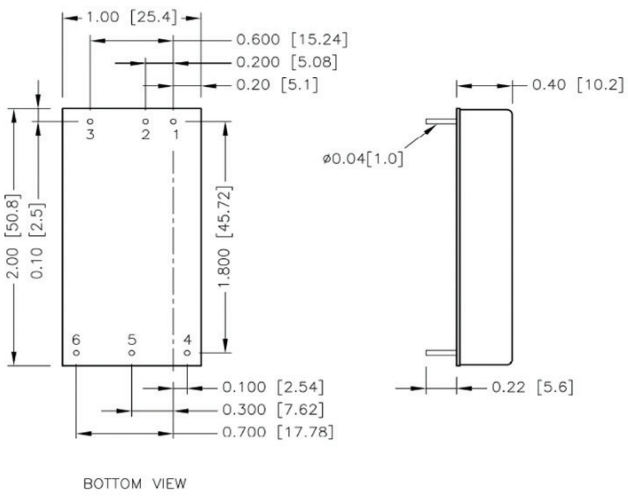

Pinout

PIN	Function	
	Single	Dual
1	+Vin	
2	-Vin	
3	Ctrl	
4	+Vout	
5	-Vout	Com
6	Trim	-Vout

1. All dimensions in inch (mm)
   Tolerance: x.xx±0.02 [x.x ± 0.5]
   x.xx±0.02 [x.x ± 0.25]
2. Pin dimension tolerance ±0.004 [0.10]

Recommended PCB Layout

Standard

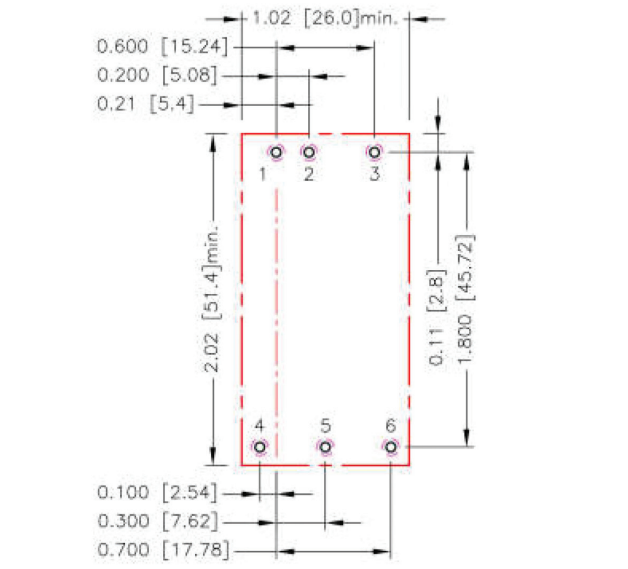

Recommended PCB Layout

-HC1、-HC2、-HC3

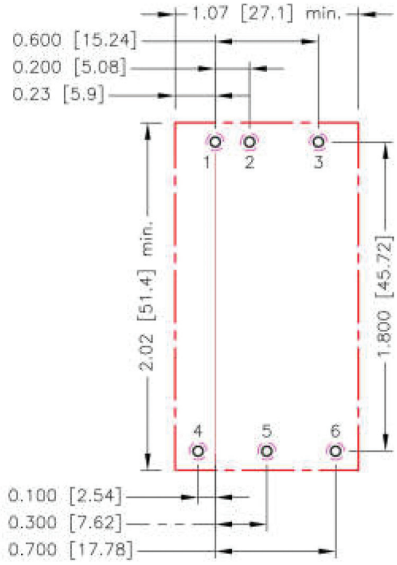

All dimensions in inch[mm]
Pad size(lead free recommended)
Through hole 1.2.3.4.5.6: Φ0.051[1.30]
Top view pad 1.2.3.4.5.6: Φ0.064[1.63]
Bottom view pad 1.2.3.4.5.6: Φ0.102[2.60]

Heat-Sink Type Options

HC1

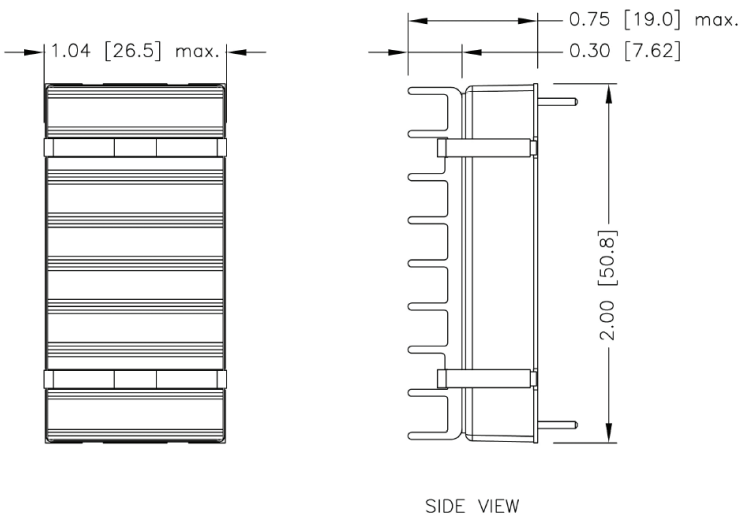

HC2

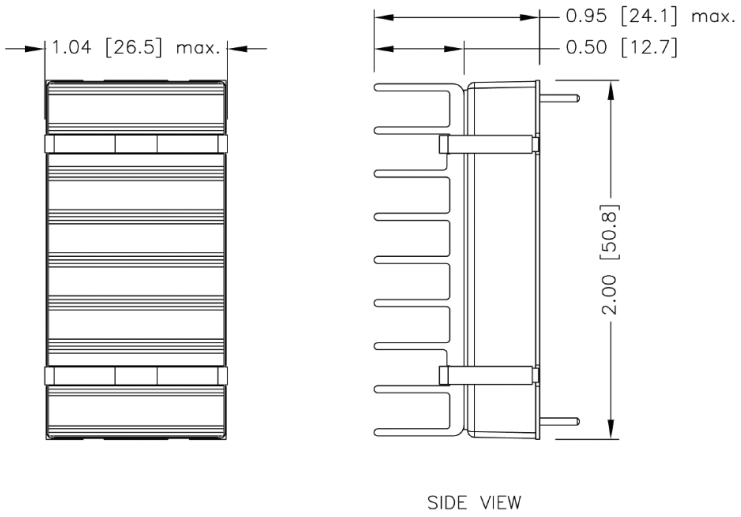

HC3

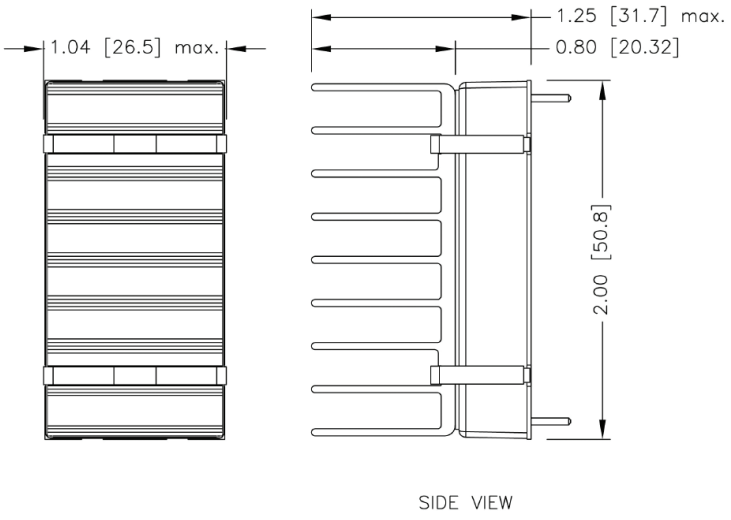

1. All dimensions in inch [mm]
2. Tolerance :x.xx±0.02 [x.x±0.5]
x.xxx±0.010 [x.xx±0.25]



TDK-Lambda France SAS
Tel: +33 1 60 12 71 65
tlf.fr-powersolutions@tdk.com
www.emea.lambda.tdk.com/fr



Italy Sales Office
Tel: +39 02 61 29 38 63
tlf.it-powersolutions@tdk.com
www.emea.lambda.tdk.com/it



Netherlands
tlf.nl-powersolutions@tdk.com
www.emea.lambda.tdk.com/nl



TDK-Lambda Germany GmbH
Tel: +49 7841 666 0
tlg.powersolutions@tdk.com
www.emea.lambda.tdk.com/de



Austria Sales Office
Tel: +43 2256 655 84
tlg.at-powersolutions@tdk.com
www.emea.lambda.tdk.com/at



Switzerland Sales Office
Tel: +41 44 850 53 53
tlg.ch-powersolutions@tdk.com
www.emea.lambda.tdk.com/ch



Nordic Sales Office
Tel: +45 8853 8086
tlg.dk-powersolutions@tdk.com
www.emea.lambda.tdk.com/dk



TDK-Lambda UK Ltd.
Tel: +44 (0) 12 71 85 66 66
tlu.powersolutions@tdk.com
www.emea.lambda.tdk.com/uk



TDK-Lambda Ltd.
Tel: +9 723 902 4333
tli.powersolutions@tdk.com
www.emea.lambda.tdk.com/il-en



TDK-Lambda Americas
Tel: +1 800-LAMBDA-4 or 1-800-526-2324
tla.powersolutions@tdk.com
www.us.lambda.tdk.com



TDK Electronics do Brasil Ltda
Tel: +55 11 3289-9599
sales.br@tdk-electronics.tdk.com
www.tdk-electronics.tdk.com/en



TDK-Lambda Corporation
Tel: +81-3-6778-1113
www.jp.lambda.tdk.com



TDK-Lambda (China) Electronics Co. Ltd.
Tel: +86 21 6485-0777
tlc.powersolutions@tdk.com
www.lambda.tdk.com.cn



TDK-Lambda Singapore Pte Ltd.
Tel: +65 6251 7211
tls.marketing@tdk.com
www.sg.lambda.tdk.com



TDK India Private Limited, Power Supply Division
Tel: +91 80 4039-0660
mathew.philip@tdk.com
www.sg.lambda.tdk.com

For additional information, please visit
https://product.tdk.com/en/power/