1-1571983-3 ✔ ACTIVE

Alcoswitch | Alcoswitch DIP, Alcoswitch DIP GDH

TE Internal #: 1-1571983-3

DIP & SIP Switches, Gold, Black, Polyphenylene Sulfide (PPS), Sealed Device, 10 Switch, -30 – 85 °C, DIP, Alcoswitch DIP

View on TE.com >

Switches > DIP & SIP Switches



Switch Contact Plating Material: **Gold**

Case Color: **Black**

Case Material: **Polyphenylene Sulfide (PPS)**

Sealed Device: **Yes**

Number of Switches: **10**

Features

Product Type Features

Leg Style	Gull Wing
Sealed Device	Yes
DIP & SIP Switch Type	DIP
Actuator Style	Recessed Rocker

Configuration Features

Number of Positions	10
Number of Switches	10
Configuration (Pole-Throw)	Single Pole - Single Throw

Electrical Characteristics

Contact Current Rating	.1 A
Operating Voltage	50 VDC

Body Features

Sealing Method	Sealing Tape
Case Color	Black
Case Material	Polyphenylene Sulfide (PPS)

Contact Features

Contact Underplating Material	Nickel
PCB Contact Termination Area Plating Material	Gold

Switch Contact Plating Material	Gold
Contact Base Material	Copper Alloy

Termination Features

Termination Method to PCB	Surface Mount

Housing Features

Low Profile	Yes
Centerline (Pitch)	1.27 mm[.05 in]

Dimensions

Product Length	13.82 mm[.544 in]

Usage Conditions

Operating Temperature Range	-30 – 85 °C

Industry Standards

UL Flammability Rating	UL 94V-0

Packaging Features

Packaging Quantity	30
Packaging Method	Tube

Product Compliance

For compliance documentation, visit the product page on TE.com>

EU RoHS Directive 2011/65/EU	Compliant
EU ELV Directive 2000/53/EC	Compliant
China RoHS 2 Directive MIIT Order No 32, 2016	No Restricted Materials Above Threshold
EU REACH Regulation (EC) No. 1907/2006	Current ECHA Candidate List: JUNE 2024 (241) Candidate List Declared Against: JUNE 2024 (241) Does not contain REACH SVHC
Halogen Content	Low Halogen - Br, Cl, F, I < 900 ppm per homogenous material. Also BFR/CFR/PVC Free
Solder Process Capability	Reflow solder capable to 260°C

Product Compliance Disclaimer

This information is provided based on reasonable inquiry of our suppliers and represents our current actual knowledge based on the information they provided. This information is subject to change. The part numbers that TE has identified as EU RoHS compliant have a maximum concentration of 0.1% by weight in homogenous materials for lead, hexavalent

chromium, mercury, PBB, PBDE, DBP, BBP, DEHP, DIBP, and 0.01% for cadmium, or qualify for an exemption to these limits as defined in the Annexes of Directive 2011/65/EU (RoHS2). Finished electrical and electronic equipment products will be CE marked as required by Directive 2011/65/EU. Components may not be CE marked. Additionally, the part numbers that TE has identified as EU ELV compliant have a maximum concentration of 0.1% by weight in homogenous materials for lead, hexavalent chromium, and mercury, and 0.01% for cadmium, or qualify for an exemption to these limits as defined in the Annexes of Directive 2000/53/EC (ELV). Regarding the REACH Regulation, the information TE provides on SVHC in articles for this part number is based on the latest European Chemicals Agency (ECHA) 'Guidance on requirements for substances in articles' posted at this URL: https://echa.europa.eu/guidance-documents/guidance-on-reach

Compatible Parts



TE Part # 1571983-5
GDH04STR04=DIP SWITCH



TE Part # 1-1571983-1
GDH08STR04=DIP SWITCH



TE Part # 1571983-4
GDH04S04=DIP SWITCH

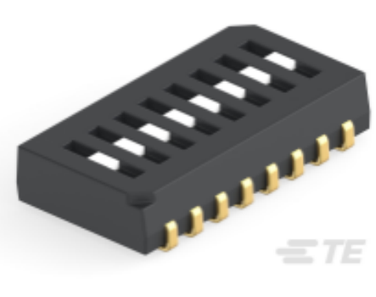

TE Part # 1977830-4
DIP SWITCH GDH08SA04

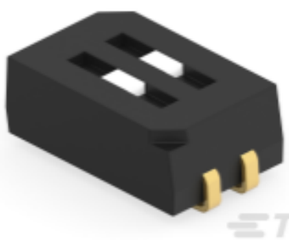

TE Part # 1977830-1
DIP SWITCH GDH02SA04

TE Part # 1-1571983-6
GDH10STRNTS04=DIP SWITCH

Also in the Series | Alcoswitch DIP

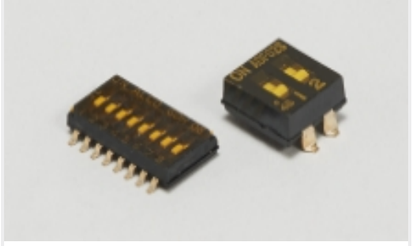

DIP & SIP Switches(185)



Rotary Switches(16)

Also in the Series | Alcoswitch DIP GDH

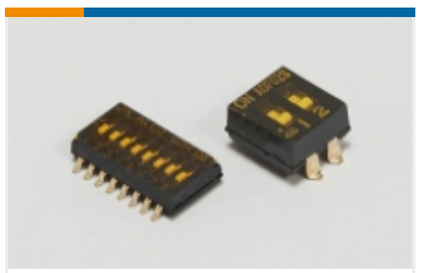

DIP & SIP Switches(22)

Customers Also Bought



TE Part #1-5499913-0
AMP-LATCH UNIVERSAL HEADERS



TE Part #5207719-3
KIT SCREWLOCK FEMALE CLEAR ZIN



TE Part #5-103639-2
03 MTE HDR SRST LATCH .100CL



TE Part #5-104363-5
06 MTE HDR SRST LATCH .100CL



TE Part #5-104363-3
04 MTE HDR SRST LATCH .100CL



TE Part #103638-1
02 MTE HDR SRST LATCH .100CL



TE Part #5-103639-9
10 MTE HDR SRST LATCH .100CL



TE Part #747871-8
09 PLUG SP/FMS INSRT

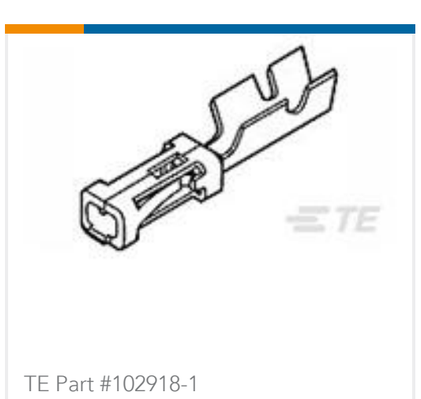

TE Part #102918-1
MOD IV RECP PLTD 30 SEL

Documents

CAD Files

3D PDF

English

Customer View Model

ENG_CVM_1-1571983-3_B.2d_dxf.zip

English

Customer View Model

ENG_CVM_1-1571983-3_B.3d_igs.zip

English

Customer View Model

ENG_CVM_1-1571983-3_B.3d_stp.zip

English

Customer View Model

ENG_CVM_CVM_1-1571983-3_C.3d_igs.zip

English

Customer View Model

ENG_CVM_CVM_1-1571983-3_C.3d_stp.zip

English

Customer View Model

ENG_CVM_CVM_1-1571983-3_C.2d_dxf.zip

English

3D PDF

3D

By downloading the CAD file I accept and agree to the **Terms and Conditions** of use.

Datasheets & Catalog Pages

SWITCHES_CORE_PROGRAM_CATALOG

English