15KEBS6AFPD ✔ ACTIVE

Corcom KEB

TE Internal #: 1-1609965-4

3-Phase Filters, 15A Current Rating, Threaded Bolt Input, Threaded Bolt Output, DELTA (3 wire + ground), Operating Voltage 440 VAC, Corcom KEB

View on TE.com >

EMI & EMC Solutions > EMI Filters > Power Line Filters > 3-Phase Filters



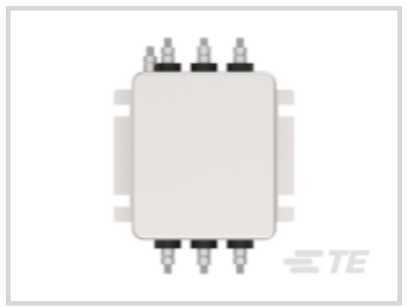



Current Rating: **15 A**

Input Termination Type: **Threaded Bolt**

Output Termination Type: **Threaded Bolt**

Wiring Configuration: **DELTA (3 wire + ground)**

Operating Voltage: **440 VAC**

Features

Product Type Features

Filtering Requirements	Filtered
Input Termination Type	Threaded Bolt
Output Termination Type	Threaded Bolt

Configuration Features

Wiring Configuration	DELTA (3 wire + ground)

Electrical Characteristics

Leakage Current (Max) (230VAC, 50Hz)	3
Current Rating	15 A
Operating Voltage	440 VAC

Mechanical Attachment

Product Mount Type	Chassis

Usage Conditions

Operating Temperature Range	-25 – 85 °C

Product Compliance

For compliance documentation, visit the product page on TE.com>

EU RoHS Directive 2011/65/EU	Compliant
EU ELV Directive 2000/53/EC	Compliant
China RoHS 2 Directive MIIT Order No 32, 2016	No Restricted Materials Above Threshold
EU REACH Regulation (EC) No. 1907/2006	Current ECHA Candidate List: JUNE 2024 (241) Candidate List Declared Against: JUNE 2023 (235) Does not contain REACH SVHC
Halogen Content	Low Halogen - Br, Cl, F, I < 900 ppm per homogenous material. Also BFR/CFR/PVC Free
Solder Process Capability	Not reviewed for solder process capability

Product Compliance Disclaimer

This information is provided based on reasonable inquiry of our suppliers and represents our current actual knowledge based on the information they provided. This information is subject to change. The part numbers that TE has identified as EU RoHS compliant have a maximum concentration of 0.1% by weight in homogenous materials for lead, hexavalent chromium, mercury, PBB, PBDE, DBP, BBP, DEHP, DIBP, and 0.01% for cadmium, or qualify for an exemption to these limits as defined in the Annexes of Directive 2011/65/EU (RoHS2). Finished electrical and electronic equipment products will be CE marked as required by Directive 2011/65/EU. Components may not be CE marked. Additionally, the part numbers that TE has identified as EU ELV compliant have a maximum concentration of 0.1% by weight in homogenous materials for lead, hexavalent chromium, and mercury, and 0.01% for cadmium, or qualify for an exemption to these limits as defined in the Annexes of Directive 2000/53/EC (ELV). Regarding the REACH Regulation, the information TE provides on SVHC in articles for this part number is based on the latest European Chemicals Agency (ECHA) 'Guidance on requirements for substances in articles' posted at this URL: https://echa.europa.eu/guidance-documents/guidance-on-reach

Compatible Parts



TE Part # 1-1609965-8
KEB 40A 1S NUT DELTA 440VAC

Also in the Series | Corcom KEB



3-Phase Filters(38)

Customers Also Bought



TE Part #1827587-2
DYNAMIC D1000 REC CONT M AU 0.38um L/P

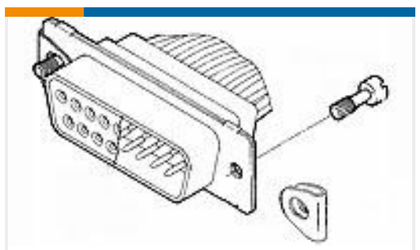

TE Part #211883-5
SCREW RETAINER KIT,AMPLIMITE



TE Part #323672
SPLICE,SOLIS PARA HT 12-10

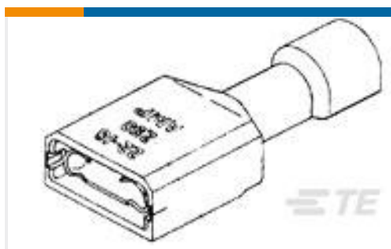

TE Part #2-520272-2
ULTRA-FAST .110/.125 ASY REC 22-18 TPBR



TE Part #1735801-1
2.0mm,Crimp,Contact

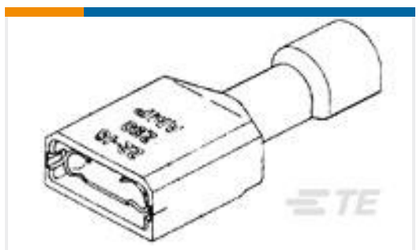

TE Part #9-520272-2
ULTRA-FAST .110/.125 ASY REC 22-18 TPBR

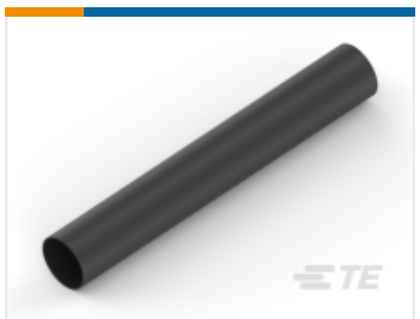

TE Part #NB09542001
ATUM-16/4-0-STK



TE Part #5-1617753-0
FCA-325-BZ4



TE Part #745311-1
HDE CBL CLMP KIT,SZ 4

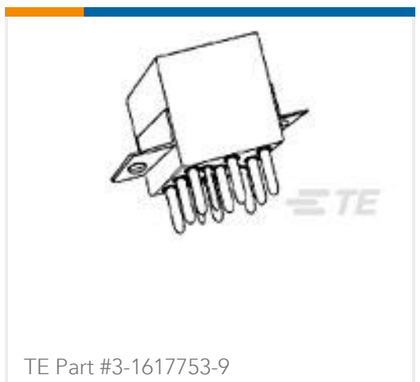

TE Part #3-1617753-9
FCA-325-AY4

Documents

Product Drawings

KEB 15A 1S NUT DELTA 440VAC

English

CAD Files

Customer View Model

ENG_CVM_CVM_1-1609965-4_B.3d_igs.zip

English

Customer View Model

ENG_CVM_CVM_1-1609965-4_B.3d_stp.zip

English

Customer View Model

ENG_CVM_CVM_1-1609965-4_B.2d_dxf.zip

English

3D PDF

3D

By downloading the CAD file I accept and agree to the Terms and Conditions of use.

Datasheets & Catalog Pages

KEB SERIES

English