KEM SERIES

Three Phase Superior Performance EMI Filter – Single Stage Delta Configuration

DATASHEET

Provides superior performance when used in applications with low Impedance load controlling pulsed, continuous and intermittent interference noise and where high levels of mains borne interference are present.



STANDARD



NEW DIN RAIL

Approvals & Compliance

UL Recognised

CSA Certified

Typical Circuit Diagram

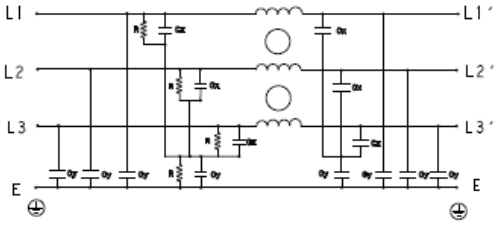

SCHEMATIC

Features

- Compact
- Superior Performance
- Chassis mounting

Applications

- CNC Machines
- HVAC
- Rectifier
- AC/DC Converters

Specifications

Electrical Characteristics

Maximum Continuous Operating Voltage	440/520VAC
Current Ratings	6A to 250A @40°C, Din Mount 1A to 50A @40°C
Operating Frequency	50/60Hz
High Potential Test Voltage -440VAC	Line to Ground 2632VDC for 1 Minute
	Line to Line 1892VDC for 1 Minute
High Potential Test Voltage -520VAC	Line to Ground 2856VDC for 1 Minute
	Line to Line 2236VDC for 1 Minute
Overload Capability	135% of Rated current for 15 minutes

Functional Characteristics

Operating Temperature Range	-25°C to +85ºC
Climatic Category	25/85/21
Termination (Depends on Current Rating)	Shock Proof (6-100A), Nut & Bolt (150-250A)
Flammability corresponding to	UL 94 V-0

Reference Standards

Design Corresponding to	UL 60939-3 and CSA 22.2 No.8-13

KEM SERIES

Selection Table – Standard Version



TE Part Number	Catalog Number	Rated Current @40°C	Rated Voltage @40°C	Leakage Current (mA)	Termination		Weight (Kgs)
1-1609967-0	6KEMS10AFPD	6A	440 VAC	18	41		0.7
1-1609967-1	8KEMS10AFPD	8A	440 VAC	18	41		2
1-1609967-2	10KEMS10AFPD	10A	440 VAC	18	41		2
1-1609967-3	16KEMS10AFPD	16A	440 VAC	18	41		3
1-1609967-4	20KEMS10AFPD	20A	440 VAC	18	41		3
1-1609967-5	25KEMS10AFPD	25A	440 VAC	18	41		3
1-1609967-6	36KEMS10AFPD	36A	440 VAC	18	10		3
1-1609967-7	50KEMS10AFPD	50A	440 VAC	18	10		3
2-1609967-0	60KEMS10AFPD	60A	440 VAC	18	16		8
2-1609967-1	75KEMS10AFPD	75A	440 VAC	20	16		8
2-1609967-2	100KEMS10AFPD	100A	440 VAC	20	25		8
2-1609967-3	125KEMS6AFPD	125A	440 VAC	20		M10	8
2-1609967-4	150KEMS6AFPD	150A	440 VAC	20		M10	8
2-1609967-5	200KEMS6AFPD	200A	440 VAC	20		M10	10
2-1609967-6	250KEMS6AFPD	250A	440 VAC	20		M10	10
4-1609967-0	6KEMS10BFPD	6A	520 VAC	18	41		0.7
4-1609967-1	8KEMS10BFPD	8A	520 VAC	18	41		2
4-1609967-2	10KEMS10BFPD	10A	520 VAC	18	41		2
4-1609967-3	16KEMS10BFPD	16A	520 VAC	18	41		3
4-1609967-4	20KEMS10BFPD	20A	520 VAC	18	41		3
4-1609967-5	25KEMS10BFPD	25A	520 VAC	18	41		3
4-1609967-6	36KEMS10BFPD	36A	520 VAC	18	10		3
4-1609967-7	50KEMS10BFPD	50A	520 VAC	18	10		3
5-1609967-0	60KEMS10BFPD	60A	520 VAC	18	16		8
5-1609967-1	75KEMS10BFPD	75A	520 VAC	20	16		8
5-1609967-2	100KEMS10BFPD	100A	520 VAC	20	25		8
5-1609967-3	125KEMS6BFPD	125A	520 VAC	20		M10	8
5-1609967-4	150KEMS6BFPD	150A	520 VAC	20		M10	8
5-1609967-5	200KEMS6BFPD	200A	520 VAC	20		M10	10
5-1609967-6	250KEMS6BFPD	250A	520 VAC	20		M10	10

KEM SERIES

Selection Table – Din Rail Mount



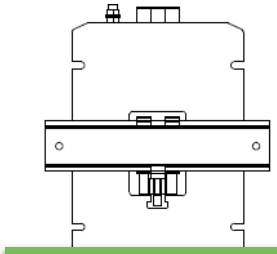

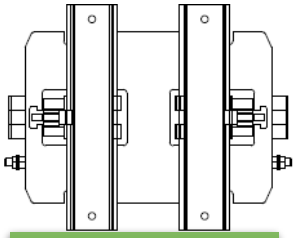

Note: Din Rail not supplied

TE Part Number	Catalog Number	Din Type	Rated Current @40°C	Rated Voltage @40°C	Leakage Current (mA)	Termination 	Weight (Kgs)
7-1609967-0	6KEMS10AFPDHM	HORIZONTAL	6A	440 VAC	18	41	0.8
7-1609967-1	8KEMS10AFPDHM	HORIZONTAL	8A	440 VAC	18	41	2.1
7-1609967-2	10KEMS10AFPDHM	HORIZONTAL	10A	440 VAC	18	41	2.1
7-1609967-3	6KEMS10AFPDVM	VERTICAL	6A	440 VAC	18	41	0.9
7-1609967-4	8KEMS10AFPDVM	VERTICAL	8A	440 VAC	18	41	2.2
7-1609967-5	10KEMS10AFPDVM	VERTICAL	10A	440 VAC	18	41	2.2
7-1609967-6	16KEMS10AFPDHM	HORIZONTAL	16A	440 VAC	18	41	3.2
7-1609967-7	20KEMS10AFPDHM	HORIZONTAL	20A	440 VAC	18	41	3.2
7-1609967-8	25KEMS10AFPDHM	HORIZONTAL	25A	440 VAC	18	41	3.2
7-1609967-9	36KEMS10AFPDHM	HORIZONTAL	36A	440 VAC	18	10	3.2
8-1609967-0	50KEMS10AFPDHM	HORIZONTAL	50A	440 VAC	18	10	3.2
9-1609967-1	6KEMS10BFPDHM	HORIZONTAL	6A	520 VAC	18	41	0.8
9-1609967-2	8KEMS10BFPDHM	HORIZONTAL	8A	520 VAC	18	41	2.1
9-1609967-3	10KEMS10BFPDHM	HORIZONTAL	10A	520 VAC	18	41	2.1
9-1609967-4	6KEMS10BFPDVM	VERTICAL	6A	520 VAC	18	41	0.9
9-1609967-5	8KEMS10BFPDVM	VERTICAL	8A	520 VAC	18	41	2.2
9-1609967-6	10KEMS10BFPDVM	VERTICAL	10A	520 VAC	18	41	2.2
9-1609967-7	16KEMS10BFPDHM	HORIZONTAL	16A	520 VAC	18	41	3.2
9-1609967-8	20KEMS10BFPDHM	HORIZONTAL	20A	520 VAC	18	41	3.2
9-1609967-9	25KEMS10BFPDHM	HORIZONTAL	25A	520 VAC	18	41	3.2
7-1609968-0	36KEMS10BFPDHM	HORIZONTAL	36A	520 VAC	18	10	3.2
7-1609968-1	50KEMS10BFPDHM	HORIZONTAL	50A	520 VAC	18	10	3.2

Connectors Cross Section

	41	10	16	25	50
Wire Section (mm^2)	$4mm^2$	$10\ mm^2$	$16\ mm^2$	$25\ mm^2$	$50\ mm^2$
Wire Section (AWG)	12AWG	8 AWG	6 AWG	4 AWG	1/0 AWG
Wire Stripping	Max 10mm	max 13.5 mm	max 17 mm	max 17 mm	max 20 mm
Max Recommended Torque	0.5 Nm / 4.5 in.lbs	1.2 Nm / 10.8 in.lbs	2÷2.2 Nm / 18÷19.8 in.lbs	2 Nm / 18 in.lbs	6 Nm / 54 in.lbs

Insertion Loss (Typical) – Measured in Closed 50Ω System

Common Mode 50Ω / 50Ω

Current Rating	Frequency in MHz								
	0.01	0.05	0.15	0.5	1	3	5	10	30
6A	60	64	64	57	51	44	40	34	30
8A	56	60	62	54	50	42	40	34	32
10A	65	64	61	55	51	42	38	33	27
16A	57	55	56	54	49	41	37	32	29
20A	56	54	56	53	49	45	38	32	24
25A	54	52	50	48	46	39	34	32	24
36A	60	55	48	38	32	30	28	44	35
50A	58	54	45	34	31	32	29	42	36
60A	54	51	47	36	39	29	32	38	44
75A	44	46	51	55	50	54	44	33	36
100A	36	40	46	48	52	49	40	34	27
125A	34	40	48	44	50	48	38	32	28
150A	34	36	42	44	51	47	40	34	30
200A	32	36	51	50	47	40	35	30	26
250A	32	35	51	51	47	39	35	29	26

Differential Mode 50Ω / 50Ω

Current Rating	Frequency in MHz								
	0.01	0.05	0.15	0.5	1	3	5	10	30
6A	20	22	35	62	49	39	36	30	26
8A	20	24	35	60	46	39	36	30	26
10A	20	23	36	61	49	38	34	29	25
16A	35	37	46	55	48	38	35	29	26
20A	31	32	35	55	72	64	60	51	54
25A	32	34	34	50	68	62	59	50	52
36A	54	50	46	40	35	42	29	40	50
50A	56	51	48	42	40	48	46	52	54
60A	50	49	50	42	45	48	49	53	58
75A	48	51	54	49	52	49	46	32	28
100A	37	41	50	55	60	58	56	55	40
125A	32	38	51	57	61	56	58	58	46
150A	32	38	51	57	61	54	58	57	44
200A	34	38	52	52	46	37	38	31	25
250A	33	36	52	52	47	40	37	31	25

Common Mode Insertion Loss (Typical in dB – refer to Table above)

3A	6A
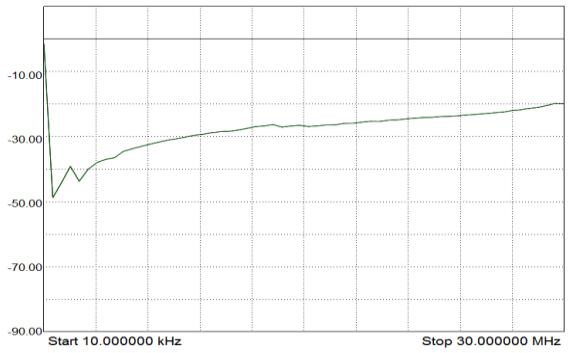	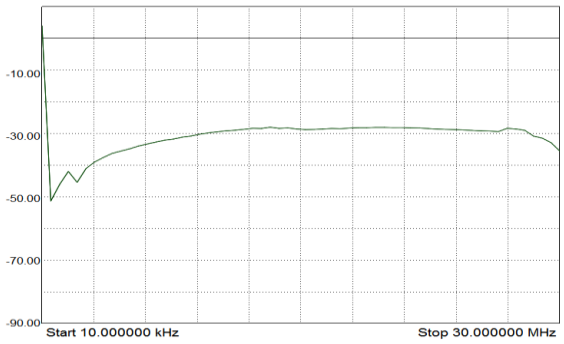
8A	**10A**
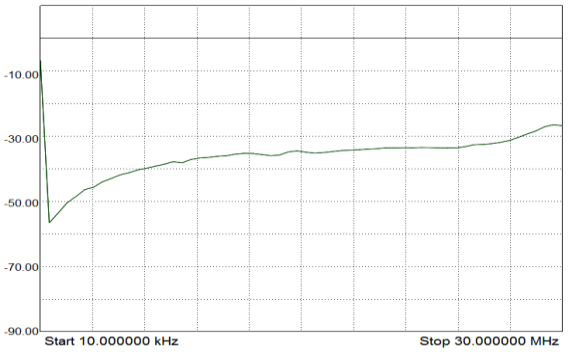	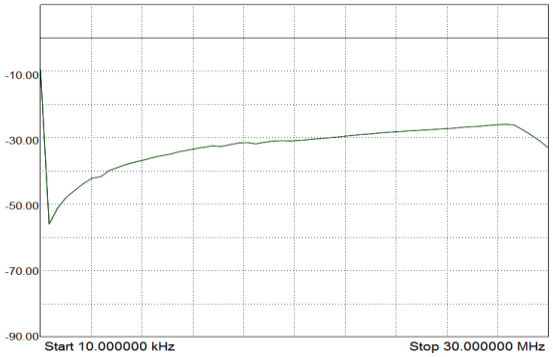
16A	**20A**
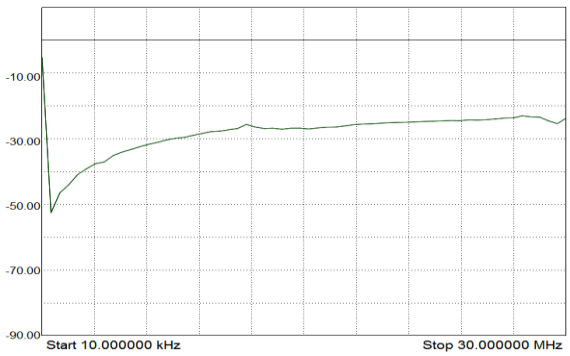	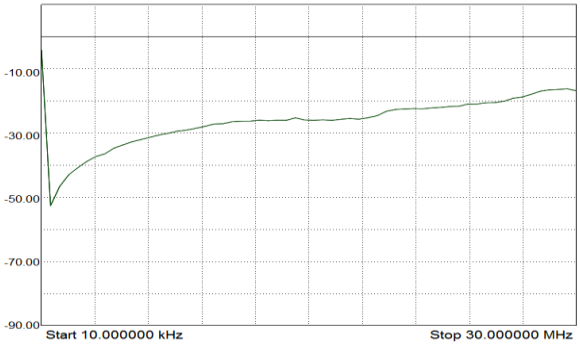

KEM SERIES

25A	36A
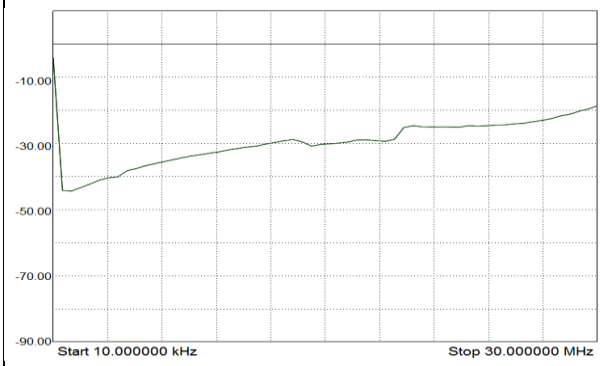	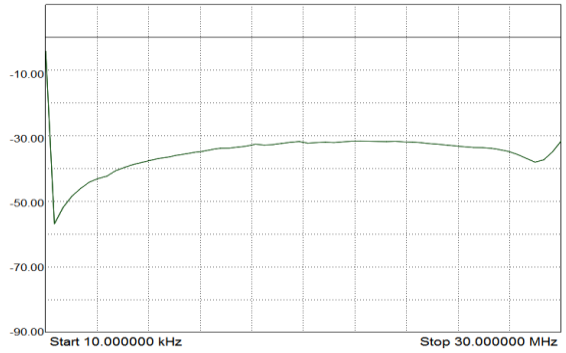
50A	**60A**
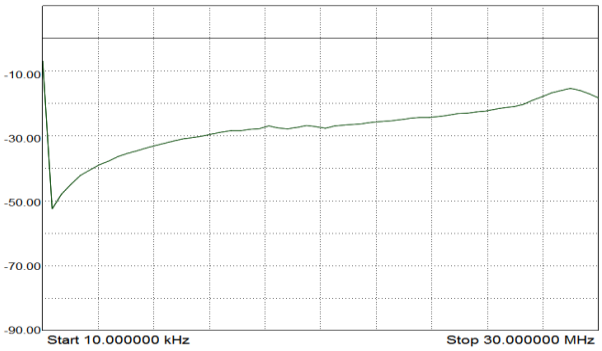	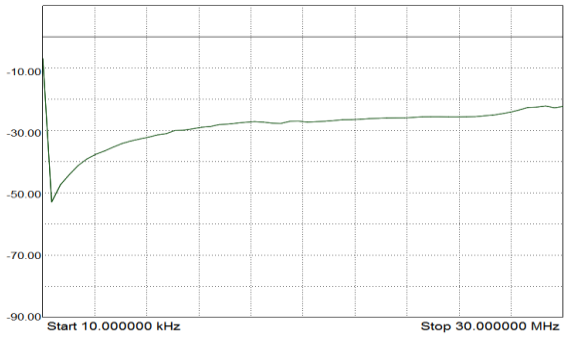
75A	**100A**
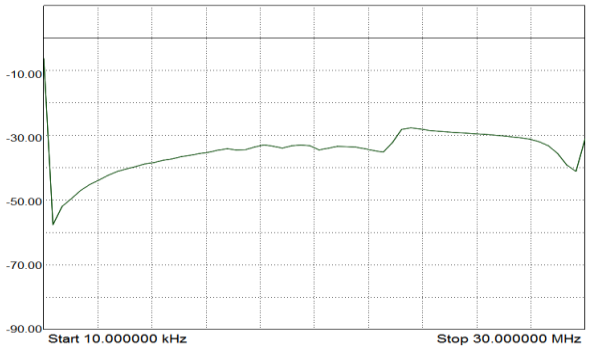	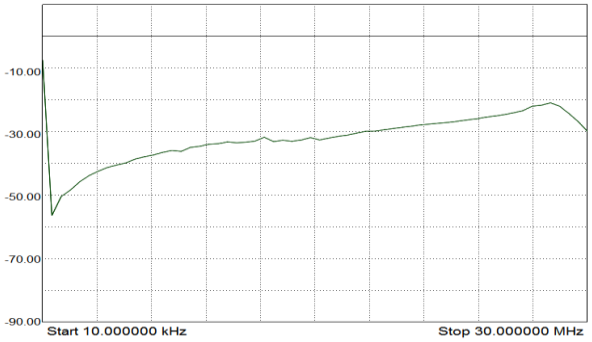

KEM SERIES

125A	150A
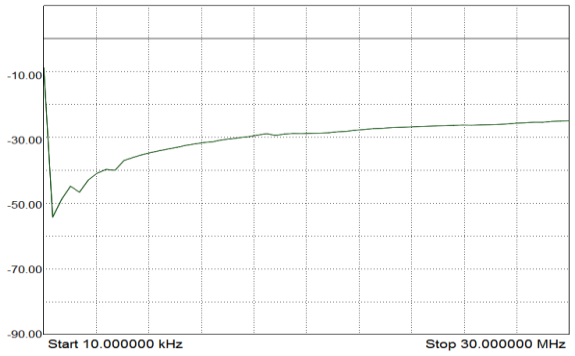	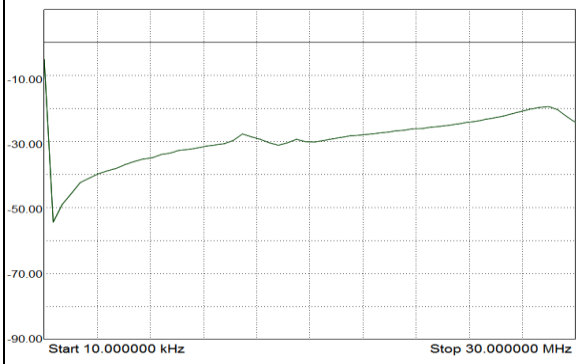
200A	**250A**
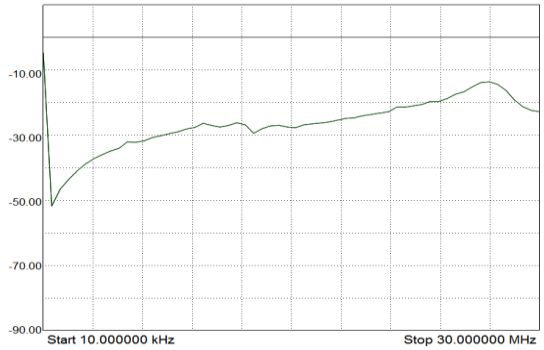	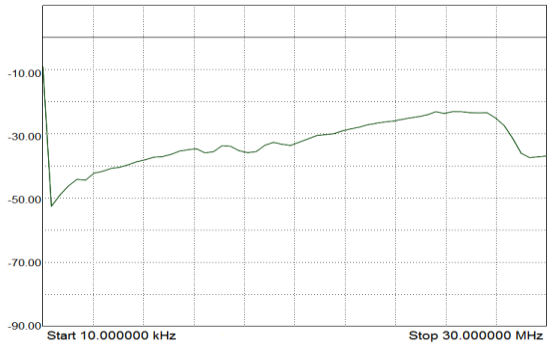

Case Dimensions – Standard Version

6A Shock Proof Type

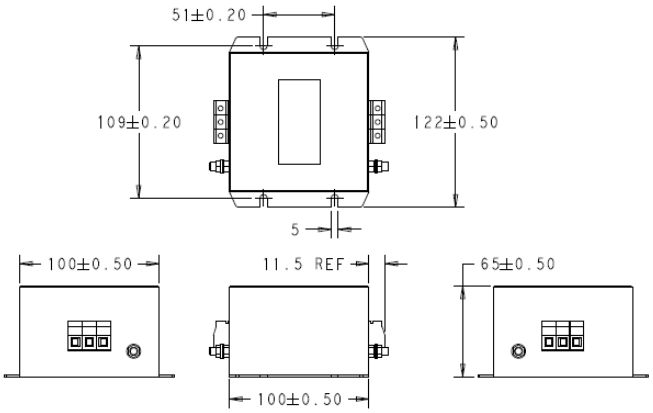

8A to 10A Shock Proof Types

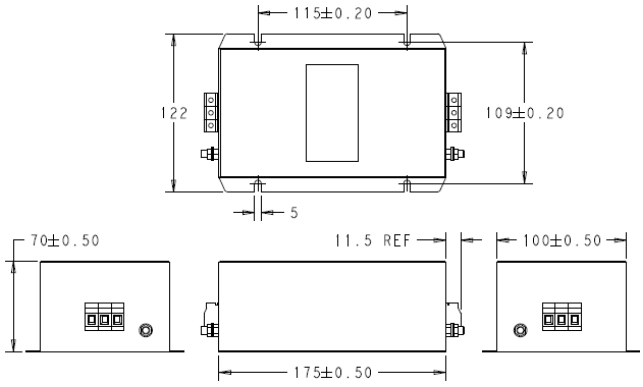

15A to 50A Shock Proof Types

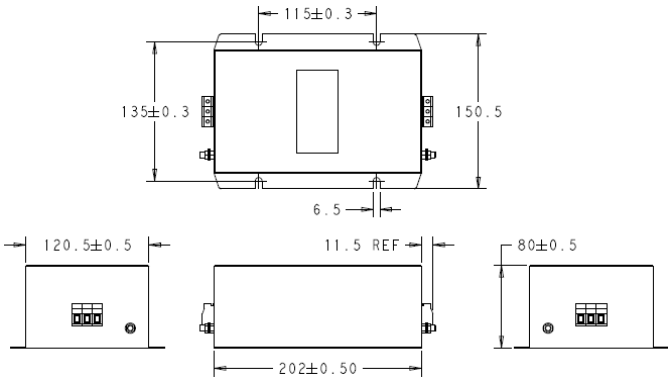

60A to 100A Shock Proof Types

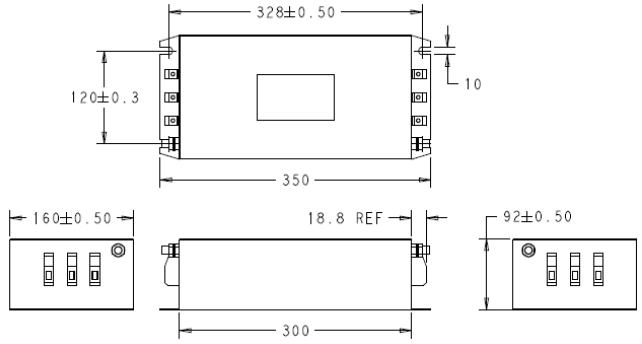

125A to 150A Nut & Bolt Types

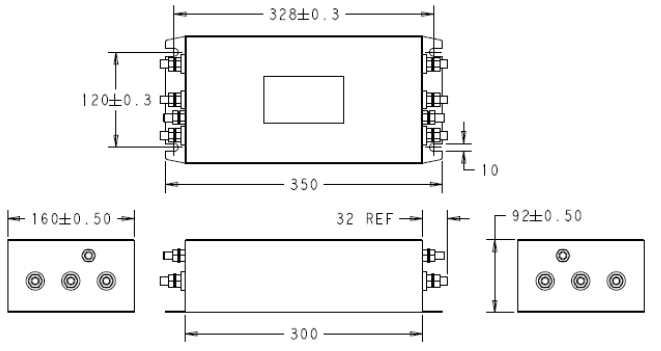

150A to 250A Nut & Bolt Types

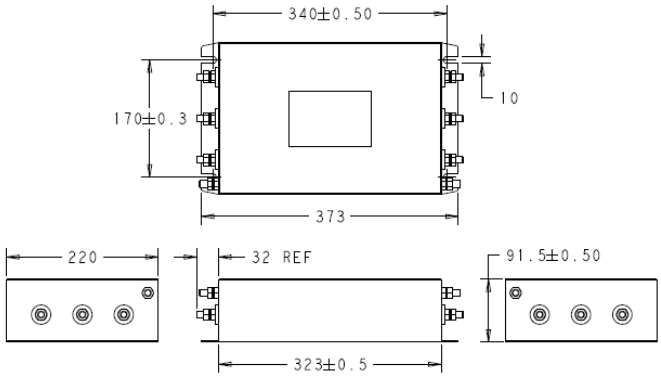

All dimensions in mm; Tolerances according: ISO2768-m

Case Dimensions – Din Rail Mount

6A Shock Proof Type – Horizontal Mount

Note: Din Rail not supplied

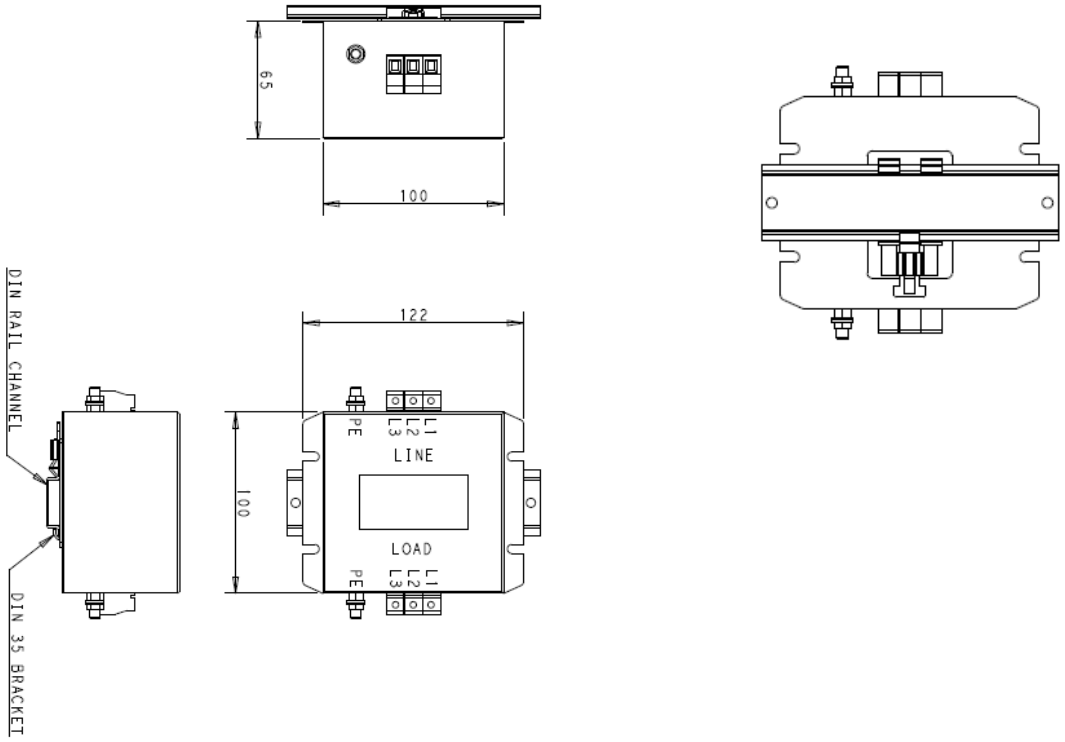

6A Shock Proof Type – Vertical Mount

Note: Din Rail not supplied

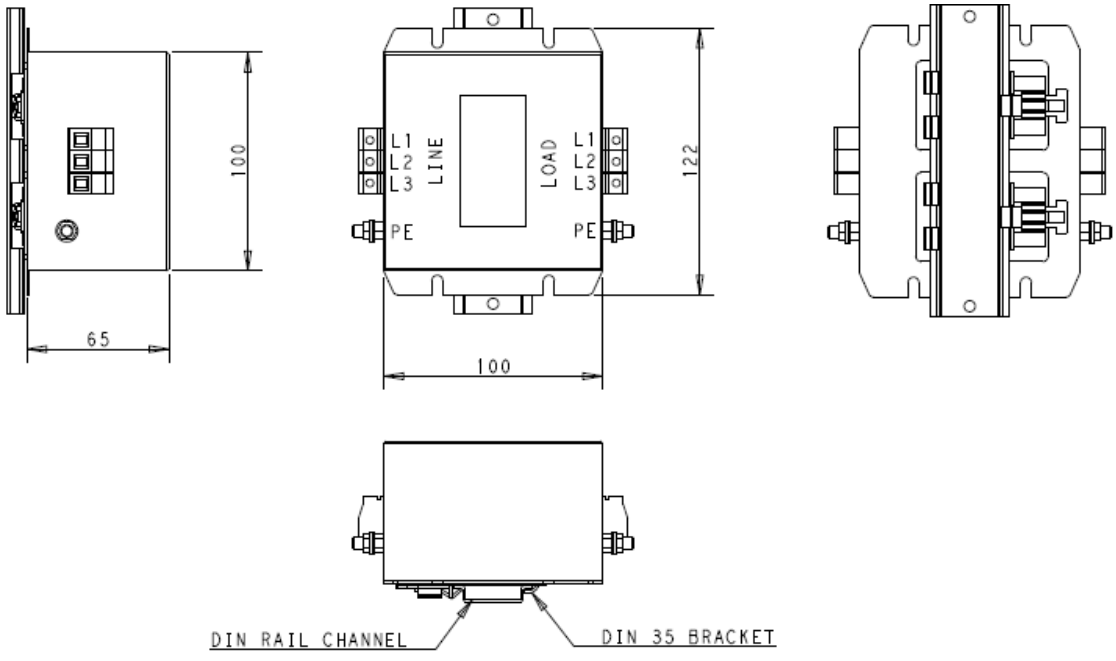

KEM SERIES

8A to 10A Shock Proof Types – Horizontal Mount

Note: Din Rail not supplied

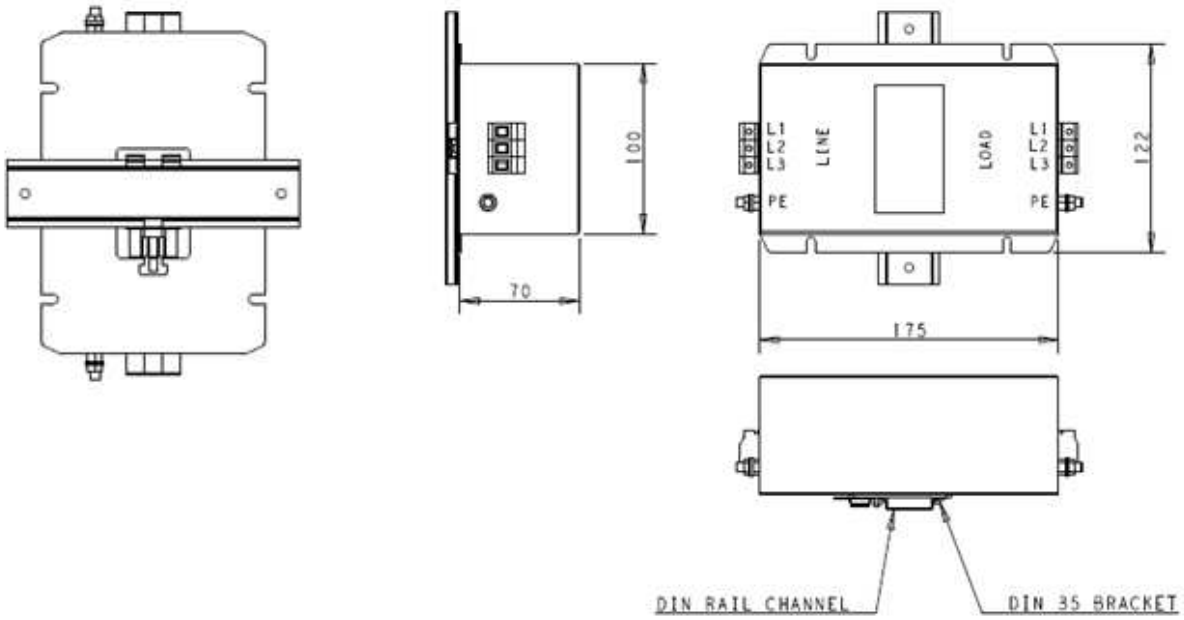

8A to 10A Shock Proof Types – Vertical Mount

Note: Din Rail not supplied

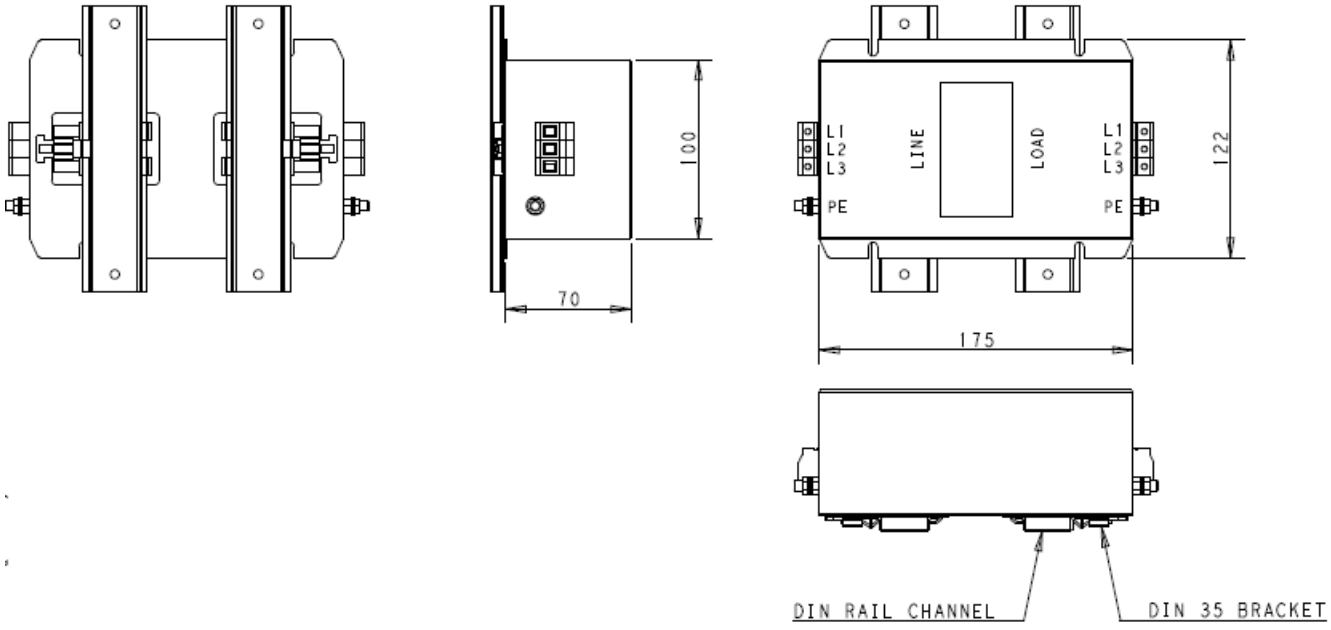

KEM SERIES

16A to 50A Shock Proof Types – Horizontal Mount

Note: Din Rail not supplied

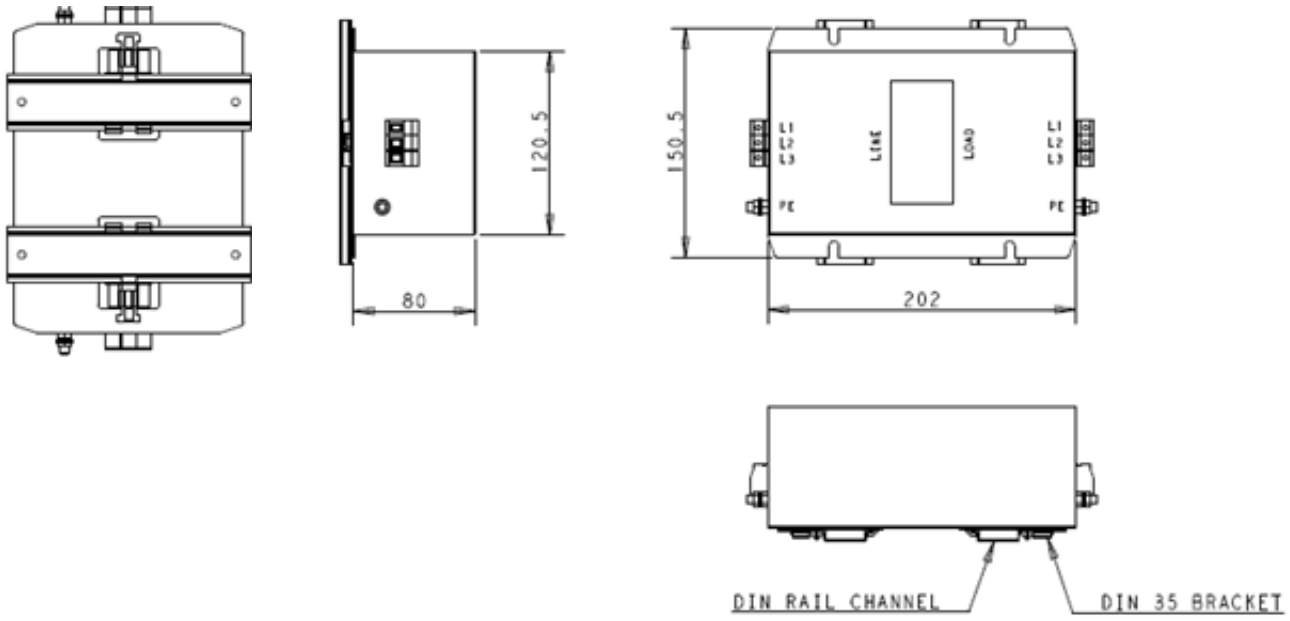

All dimensions in mm; Tolerances according: ISO2768-m

How to Order

25	KEM	S	10	A	FP	D	HM

Current

Standard 6,8,10,16,20,25,36,50,60,75,100,125,150,200,250	
Din Rail 6,8,10,16,20,25,36,50	25

Series Type

KEM

Filter Stage

Single	S
Dual	D

Termination

Quick Connect – 1	1
Nut & Bolt – 6	6
Touch Safe – 10	10

Mount Type (Din Rail only)

DM	Dual Mount
HM	Horizontal Mount
VM	Vertical Mount

Electrical Network

D	STAR – D
W	WYE – W

Filter Type

FP	Fully Potted
BS	Book Shelf

Voltage

A	440VAC – A
B	520VAC – B