KES SERIES

Three Phase General Purpose EMI Filter – Single Stage WYE Configuration

DATASHEET

Three phase General Purpose Filters designed to be used in wide range of applications.



STANDARD



NEW DIN RAIL

Approvals & Compliance

UL Recognised

CSA Certified

Features

- General Purpose 3 Phase with neutral
- Standard Attenuation Performance
- Chassis mounting, Din Rail Mount

Typical Circuit Diagram

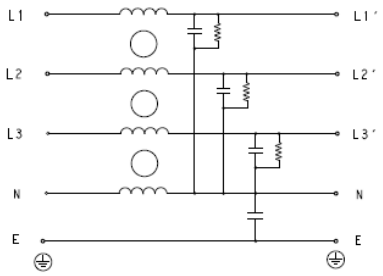

Applications

- Industrial Automation
- HVAC
- CNC Machines

Specifications

Electrical Characteristics

Maximum Continuous Operating Voltage	440/520VAC
Current Ratings	1A to 150A @40°C, Din Mount 1A to 60A @40°C
Operating Frequency	50/60Hz
High Potential Test Voltage -440VAC	Line to Ground 2632VDC for 1 Minute
	Line to Line 1892VDC for 1 Minute
High Potential Test Voltage -520VAC	Line to Ground 2856VDC for 1 Minute
	Line to Line 2236VDC for 1 Minute
Overload Capability	135% of Rated current for 15 minutes

Functional Characteristics

Operating Temperature Range	-25°C to +85ºC
Climatic Category	25/85/21
Termination (Depends on Current Rating)	Quick Connect (1-10A)/ Bolt & Nut (15-150A) / Shock Proof (75-100A)
Flammability corresponding to	UL 94 V-0

Reference Standards

Design Corresponding to	UL 60939-3 and CSA 22.2 No.8-13

KES SERIES

Selection Table – Standard Version



TE Ordering Number	Calalog Number	Rated Current @40°C	Rated Voltage @40°C	Leakage Current (mA)	Termination			Weight (Kgs)
1-1609966-0	1KESS1AFPW	1A	440 VAC	3	6.3 x 0.8			0.26
1-1609966-1	3KESS1AFPW	3A	440 VAC	3	6.3 x 0.8			0.26
1-1609966-2	6KESS1AFPW	6A	440 VAC	3	6.3 x 0.8			0.26
1-1609966-3	10KESS1AFPW	10A	440 VAC	3	6.3 x 0.8			0.26
1-1609966-4	15KESS6AFPW	15A	440 VAC	3		M5		0.7
1-1609966-5	20KESS6AFPW	20A	440 VAC	3		M5		0.7
1-1609966-6	25KESS6AFPW	25A	440 VAC	5		M5		0.7
1-1609966-7	30KESS6AFPW	30A	440 VAC	5		M5		0.7
1-1609966-8	40KESS6AFPW	40A	440 VAC	5		M5		0.7
1-1609966-9	50KESS6AFPW	50A	440 VAC	5		M6		1.2
2-1609966-0	60KESS6AFPW	60A	440 VAC	5		M6		1.2
2-1609966-1	75KESS6AFPW	75A	440 VAC	6		M8		9
2-1609966-2	80KESS6AFPW	80A	440 VAC	6		M8		9
2-1609966-3	100KESS6AFPW	100A	440 VAC	6		M10		9
2-1609966-4	125KESS6AFPW	125A	440 VAC	8		M10		9
2-1609966-5	150KESS6AFPW	150A	440 VAC	8		M10		9
2-1609966-6	75KESS10AFPW	75A	440 VAC	6			16	9
2-1609966-7	80KESS10AFPW	80A	440 VAC	6			25	9
2-1609966-8	100KESS10AFPW	100A	440 VAC	6			25	9
4-1609966-0	1KESS1BFPW	1A	520 VAC	3	6.3 x 0.8			0.26
4-1609966-1	3KESS1BFPW	3A	520 VAC	3	6.3 x 0.8			0.26
4-1609966-2	6KESS1BFPW	6A	520 VAC	3	6.3 x 0.8			0.26
4-1609966-3	10KESS1BFPW	10A	520 VAC	3	6.3 x 0.8			0.26
4-1609966-4	15KESS6BFPW	15A	520 VAC	3		M5		0.7
4-1609966-5	20KESS6BFPW	20A	520 VAC	3		M5		0.7
4-1609966-6	25KESS6BFPW	25A	520 VAC	5		M5		0.7
4-1609966-7	30KESS6BFPW	30A	520 VAC	5		M5		0.7
4-1609966-8	40KESS6BFPW	40A	520 VAC	5		M5		0.7
4-1609966-9	50KESS6BFPW	50A	520 VAC	5		M6		1.2
5-1609966-0	60KESS6BFPW	60A	520 VAC	5		M6		1.2
5-1609966-1	75KESS6BFPW	75A	520 VAC	6		M8		9
5-1609966-2	80KESS6BFPW	80A	520 VAC	6		M8		9
5-1609966-3	100KESS6BFPW	100A	520 VAC	6		M10		9
5-1609966-4	125KESS6BFPW	125A	520 VAC	8		M10		9
5-1609966-5	150KESS6BFPW	150A	520 VAC	8		M10		9
5-1609966-6	75KESS10BFPW	75A	520 VAC	6			16	9
5-1609966-7	80KESS10BFPW	80A	520 VAC	6			25	9
5-1609966-8	100KESS10BFPW	100A	520 VAC	6			25	9

KES SERIES

Selection Table – Din Rail Mount



NEW

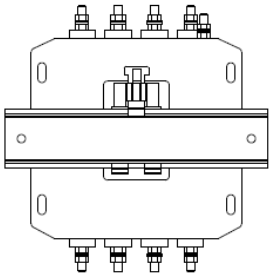

HORIZONTAL MOUNT

Note: Din Rail not supplied

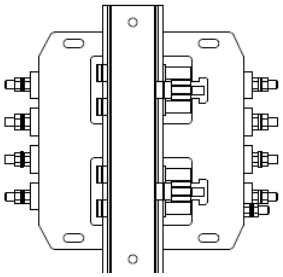

VERTICAL MOUNT

TE Ordering Number	Catalog Number	Din Type	Rated Current @40°C	Rated Voltage @40°C	Leakage Current (mA)	Weight (Kgs)	Termination	
3-1609966-0	1KESS1AFPWDM	DUAL	1A	440 VAC	3	0.36	6.3 x 0.8	
3-1609966-1	3KESS1AFPWDM	DUAL	3A	440 VAC	3	0.36	6.3 x 0.8	
3-1609966-2	6KESS1AFPWDM	DUAL	6A	440 VAC	3	0.36	6.3 x 0.8	
3-1609966-3	10KESS1AFPWDM	DUAL	10A	440 VAC	3	0.36	6.3 x 0.8	
3-1609966-4	15KESS6AFPWDM	DUAL	15A	440 VAC	3	0.8		M5
3-1609966-5	20KESS6AFPWDM	DUAL	20A	440 VAC	3	0.8		M5
3-1609966-6	25KESS6AFPWDM	DUAL	25A	440 VAC	5	0.8		M5
3-1609966-7	30KESS6AFPWDM	DUAL	30A	440 VAC	5	0.8		M5
3-1609966-8	40KESS6AFPWDM	DUAL	40A	440 VAC	5	0.8		M5
3-1609966-9	50KESS6AFPWHM	HORIZONTAL	50A	440 VAC	5	1.3		M6
6-1609966-0	60KESS6AFPWHM	HORIZONTAL	60A	440 VAC	5	1.3		M6
6-1609966-1	50KESS6AFPWVM	VERTICAL	50A	440 VAC	5	1.4		M6
6-1609966-2	60KESS6AFPWVM	VERTICAL	60A	440 VAC	5	1.4		M6
6-1609966-3	1KESS1BFPWDM	DUAL	1A	520 VAC	3	0.36	6.3 x 0.8	
6-1609966-4	3KESS1BFPWDM	DUAL	3A	520 VAC	3	0.36	6.3 x 0.8	
6-1609966-5	6KESS1BFPWDM	DUAL	6A	520 VAC	3	0.36	6.3 x 0.8	
6-1609966-6	10KESS1BFPWDM	DUAL	10A	520 VAC	3	0.36	6.3 x 0.8	
6-1609966-7	15KESS6BFPWDM	DUAL	15A	520 VAC	3	0.8		M5
6-1609966-8	20KESS6BFPWDM	DUAL	20A	520 VAC	3	0.8		M5
6-1609966-9	25KESS6BFPWDM	DUAL	25A	520 VAC	5	0.8		M5
7-1609966-0	30KESS6BFPWDM	DUAL	30A	520 VAC	5	0.8		M5
7-1609966-1	40KESS6BFPWDM	DUAL	40A	520 VAC	5	0.8		M5
7-1609966-2	50KESS6BFPWHM	HORIZONTAL	50A	520 VAC	5	1.3		M6
7-1609966-3	60KESS6BFPWHM	HORIZONTAL	60A	520 VAC	5	1.3		M6
7-1609966-4	50KESS6BFPWVM	VERTICAL	50A	520 VAC	5	1.4		M6
7-1609966-5	60KESS6BFPWVM	VERTICAL	60A	520 VAC	5	1.4		M6

Connectors Cross Section

	41	10	16	25	50
Wire Section (mm^2)	$4mm^2$	$10\ mm^2$	$16\ mm^2$	$25\ mm^2$	$50\ mm^2$
Wire Section (AWG)	12AWG	8 AWG	6 AWG	4 AWG	1/0 AWG
Wire Stripping	Max 10mm	max 13.5 mm	max 17 mm	max 17 mm	max 20 mm
Max Recommended Torque	0.5 Nm / 4.5 in.lbs	1.2 Nm / 10.8 in.lbs	2÷2.2 Nm / 18÷19.8 in.lbs	2 Nm / 18 in.lbs	6 Nm / 54 in.lbs

Insertion Loss (Typical) – Measured in Closed 50Ω System

Common Mode 50Ω / 50Ω

Current Rating	Frequency in MHz								
	0.01	0.05	0.15	0.5	1	3	5	10	30
1A	3	3	4	11	22	40	35	36	43
3A	2	2	19	22	40	38	45	47	32
6A	4	5	13	19	28	35	40	45	31
10A	3	4	15	25	29	32	30	35	29
15A	4	4	9	20	38	36	46	30	23
20A	4	5	15	25	45	48	42	40	29
25A	5	5	5	18	23	35	40	44	24
30A	4	4	9	21	28	42	58	39	20
40A	4	5	11	29	34	42	56	39	23
50A	4	4	11	24	32	42	48	34	20
60A	4	5	10	25	30	39	50	38	24
75A	2	3	7	22	29	44	43	30	16
80A	5	5	8	15	20	22	35	42	45
100A	3	4	3	17	23	25	20	32	38
125A	2	2	5	15	18	25	30	40	46
150A	3	4	11	25	35	34	28	22	11

Differential Mode 50Ω / 50Ω

Current Rating	Frequency in MHz								
	0.01	0.05	0.15	0.5	1	3	5	10	30
1A	3	4	6	19	27	30	36	38	49
3A	4	5	26	32	29	35	37	46	44
6A	4	3	15	25	30	38	45	51	49
10A	4	5	17	26	30	31	32	36	40
15A	6	8	12	16	30	33	40	38	47
20A	3	5	10	20	28	36	29	23	19
25A	4	4	19	22	26	32	48	50	52
30A	17	18	22	39	46	29	26	20	16
40A	17	18	21	34	43	40	29	19	33
50A	14	20	28	42	50	30	26	20	22
60A	11	18	22	39	45	28	24	17	15
75A	37	39	46	53	41	31	27	19	17
80A	5	6	10	20	24	30	36	38	42
100A	8	9	14	37	40	44	35	30	40
125A	3	3	9	17	19	31	35	42	42
150A	34	39	57	40	33	24	20	15	10

Common Mode Insertion Loss (Typical in dB – refer to Table above)

1A

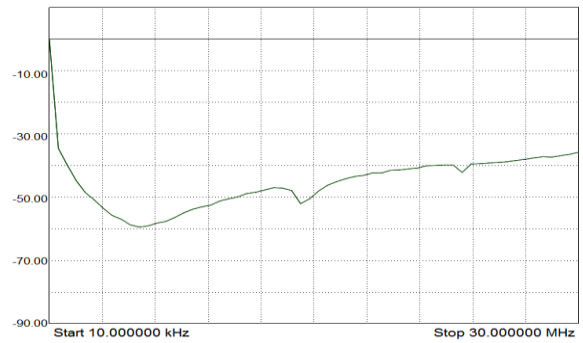

3A

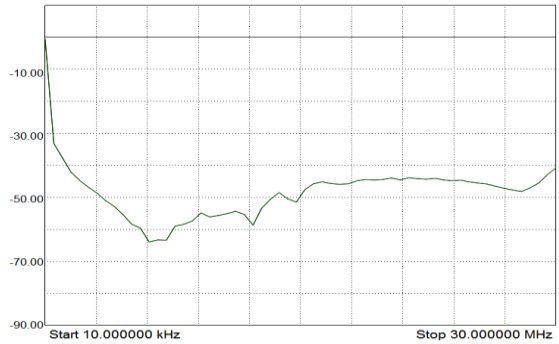

6A

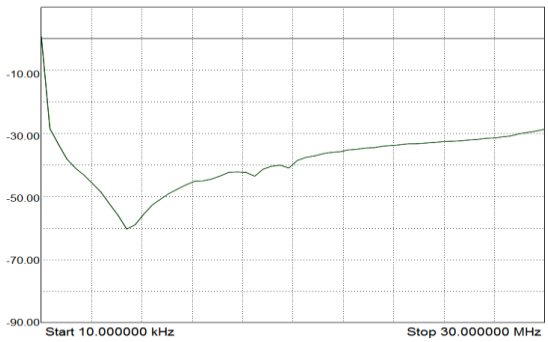

10A

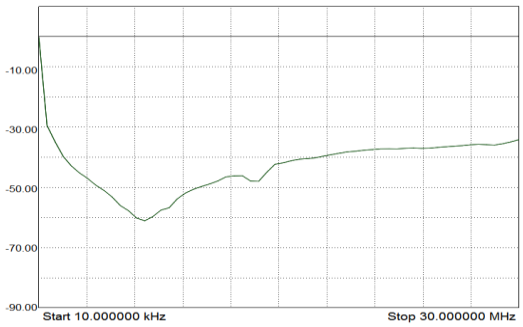

KES SERIES

15A	20A
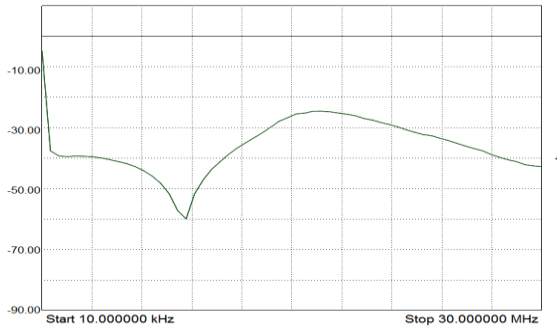	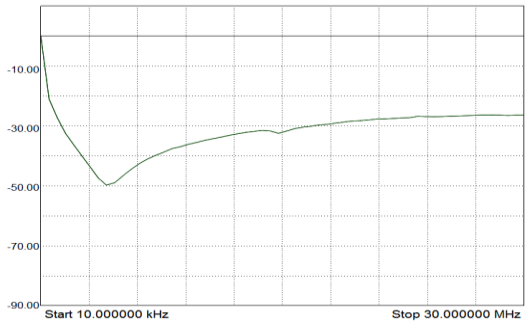
25A	**30A**
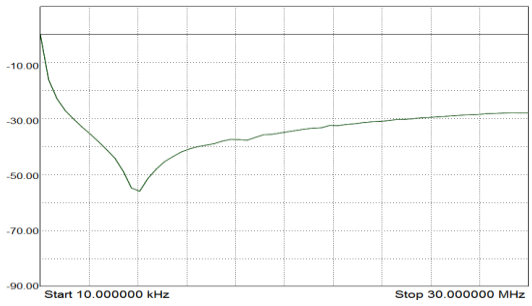	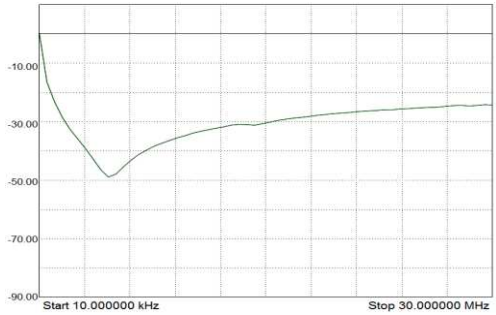
40A	**50A**
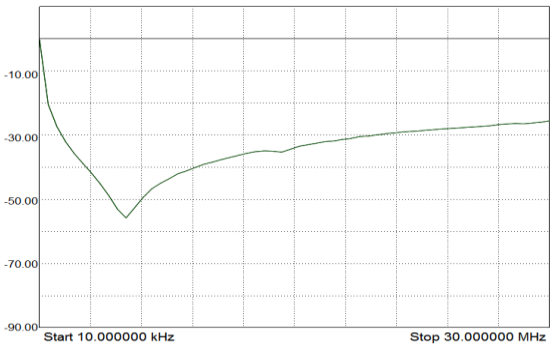	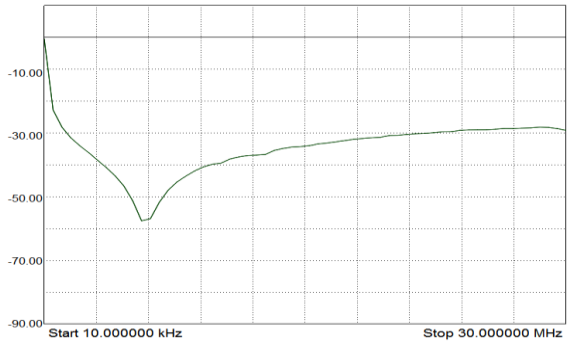
60A	**75A**
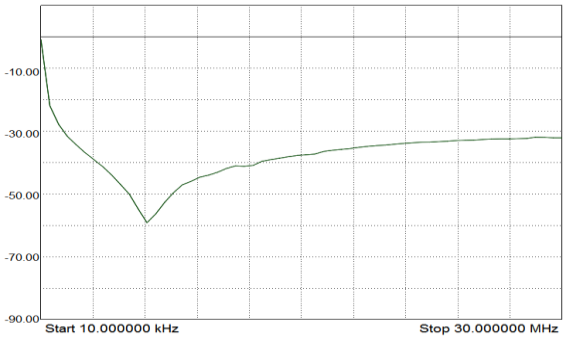	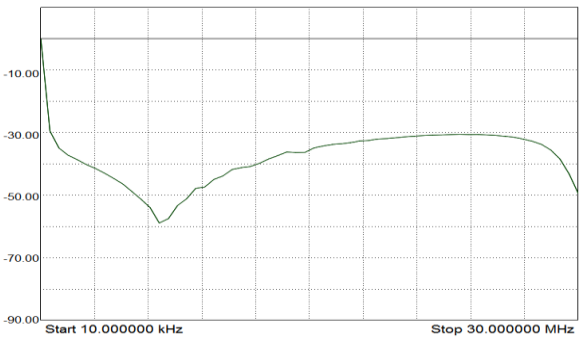

80A	100A
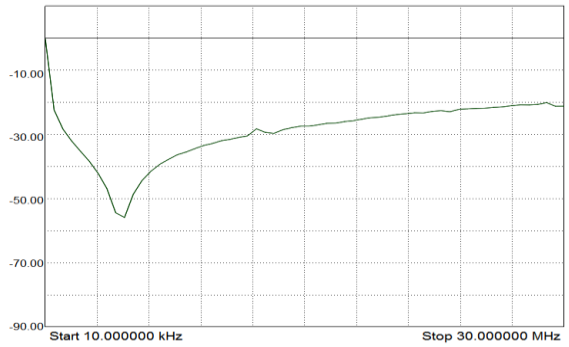	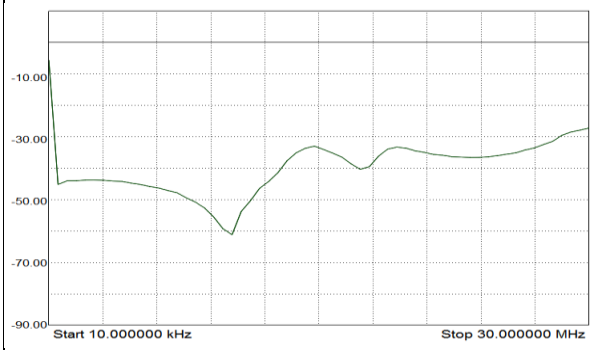
125A	**150A**
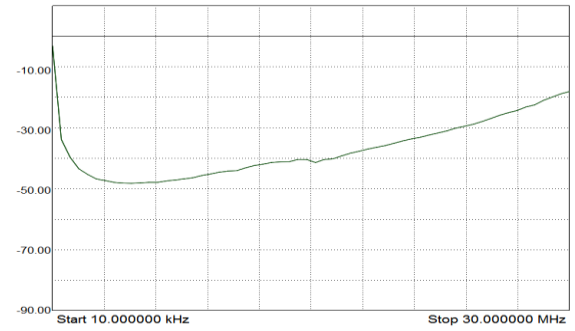	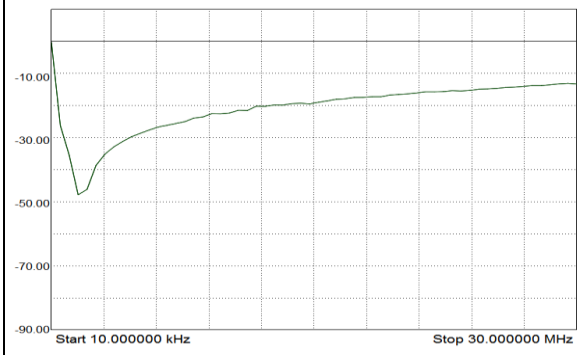

KES SERIES

Case Dimensions - Standard

1 to 10A Quick Connect (6.35 mm) Types

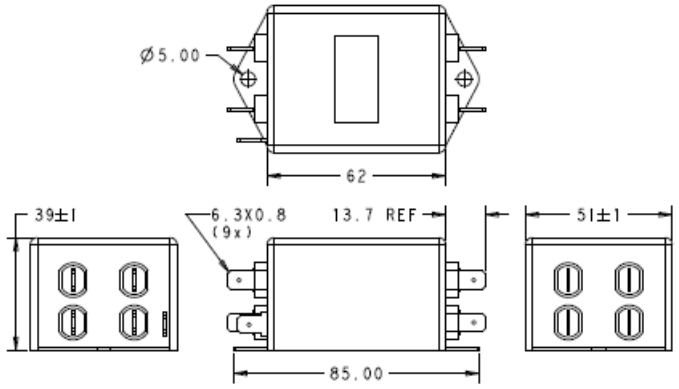

15A to 40A Nut & Bolt Types

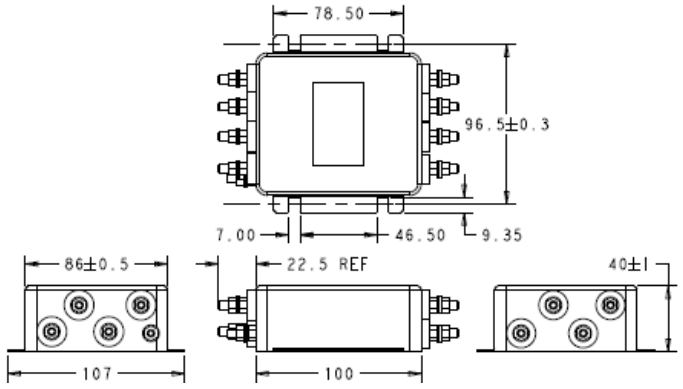

50A to 60A Nut & Bolt Types

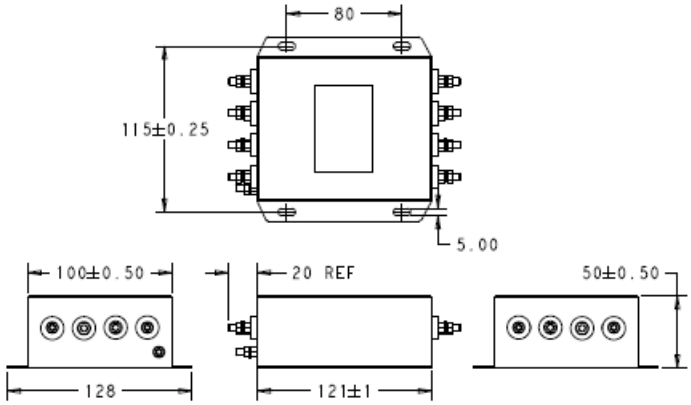

75A to 150A Nut & Bolt Types

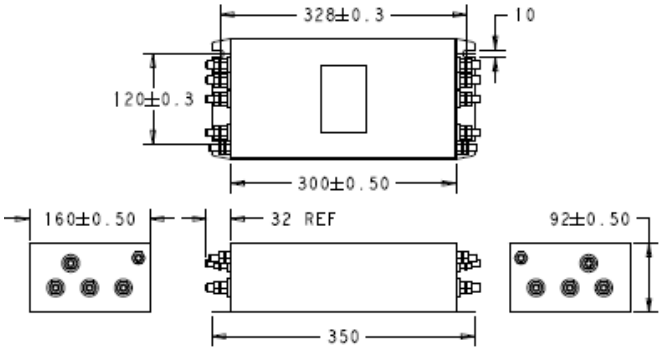

75A to 150A Shock Proof Types

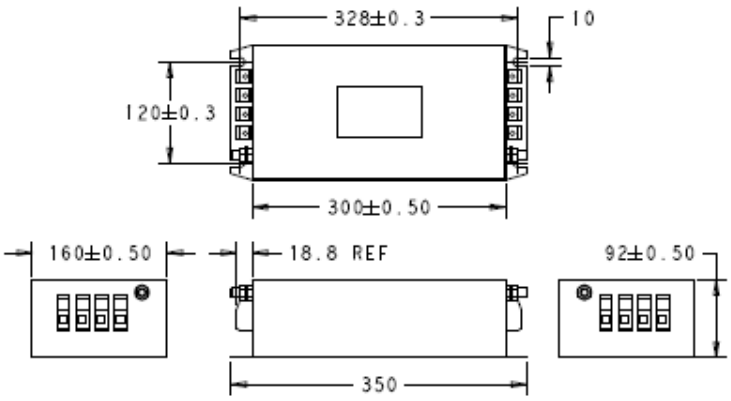

All dimensions in mm; Tolerances according: ISO2768-m

KES SERIES

Case Dimensions – Din Rail Mount

1 to 10A Quick Connect (6.35mm) Types – Dual Mount

Note: Din Rail not supplied

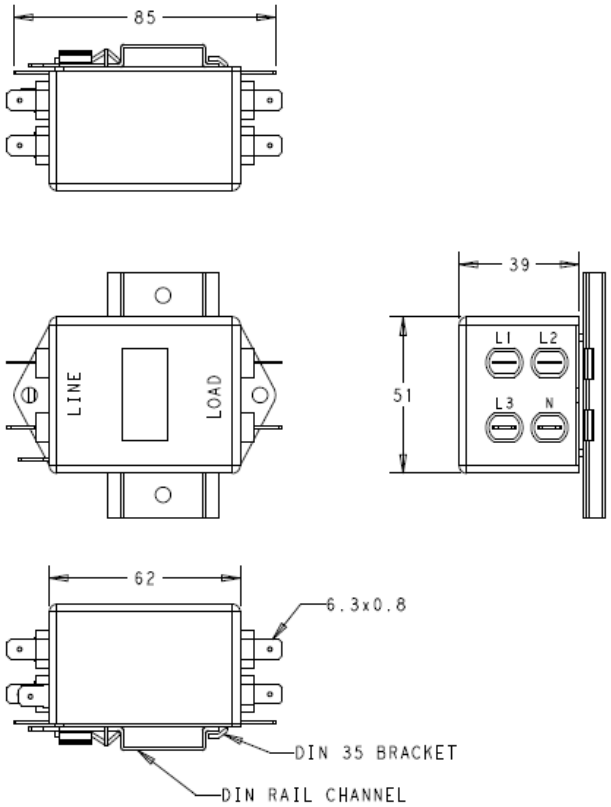

15A to 40A Nut & Bolt Types - Dual Mount

Note: Din Rail not supplied

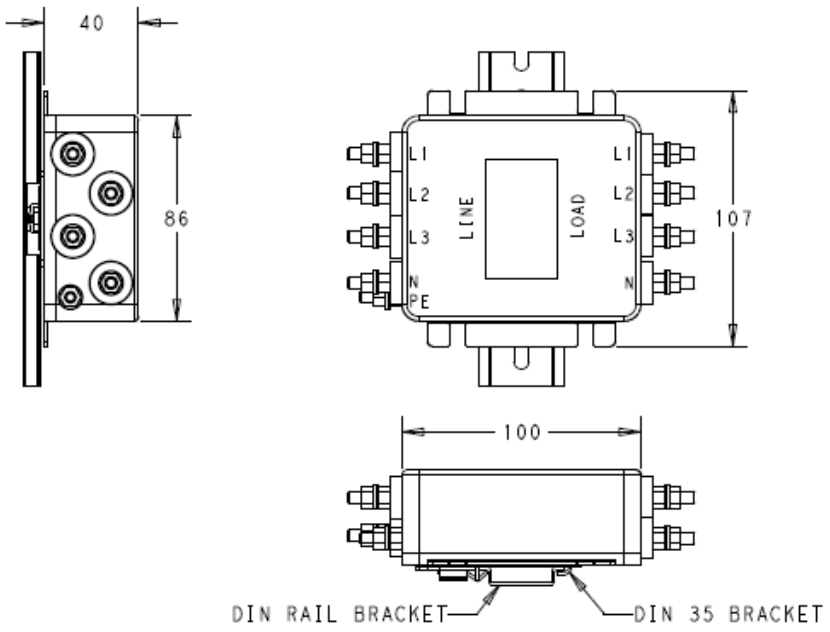

KES SERIES

50A to 60A Nut & Bolt Types – Horizontal Mount

Note: Din Rail not supplied

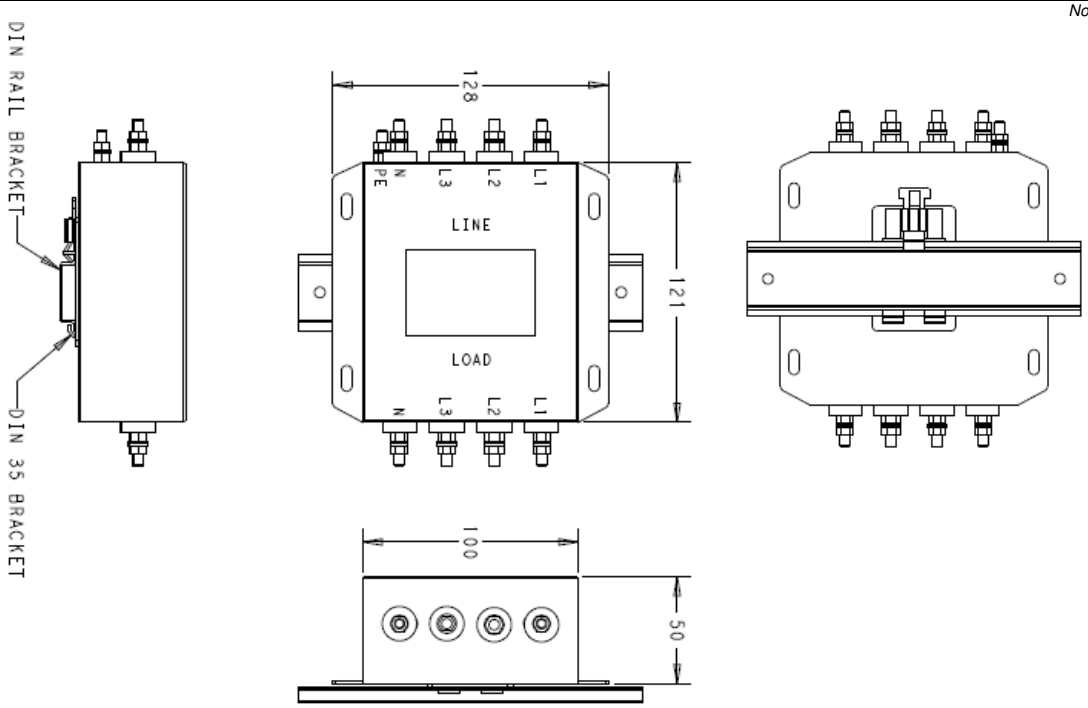

50A to 60A Nut & Bolt Types – Vertical Mount

Note: Din Rail not supplied

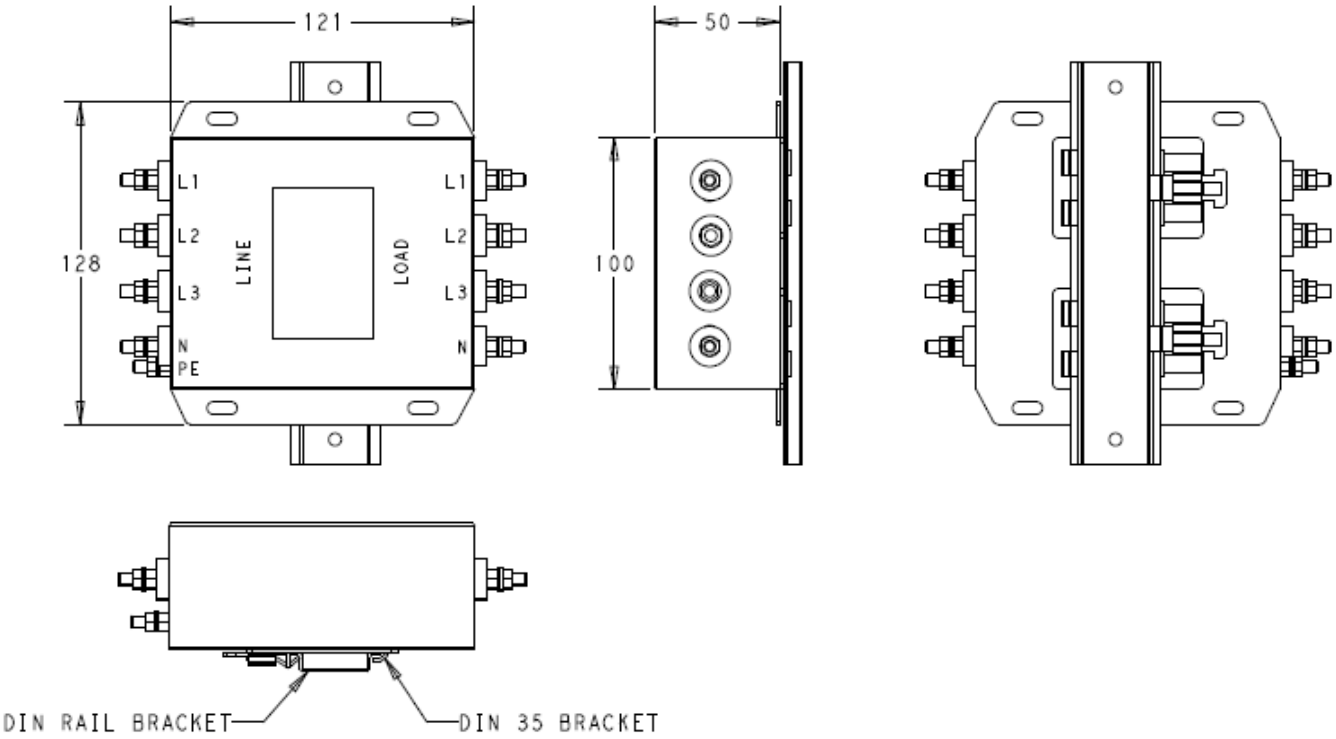

All dimensions in mm; Tolerances according: ISO2768-m

KES SERIES

How to Order

