

MSP300

Pressure Transducer

SPECIFICATIONS

- **Analog Output or 14-Bit Digital Pressure with 11-Bit Temperature Output**
- **One Piece Stainless Steel Construction**
- **Low Cost**
- **17-4PH or 316L Stainless Steel**
- **Customizable**

FEATURES

- One Piece Stainless Steel Construction
- Ranges up to 15kpsi
- Digital Pressure and Temperature Output or Analog mV/Amplified Output
- ±1 %Span Accuracy
- UL Certification (analog only)

APPLICATIONS

- Pumps and Compressors
- Hydraulic/Pneumatic Systems
- Automotive Test Systems
- Energy and Water Management
- Medical Gas Pressure
- Leak Detection
- Remote Measuring Systems
- General Pressure Measurements

The MSP300 pressure transducer from the Microfused line of TE is suitable for measurement of liquid or gas pressure, even for difficult media such as contaminated water, steam, and mildly corrosive fluids.

The transducer pressure cavity is machined from a solid piece of 17-4PH or 316L stainless steel. The standard version includes a 1/4 NPT pipe thread allowing a leak-proof, all metal sealed system. With excellent durability, there are no welds or organics exposed to the pressure media.

TE's proprietary Microfused technology, derived from demanding aerospace applications, employs micromachined silicon piezoresistive strain gages fused with high temperature glass to a stainless steel diaphragm. This approach achieves media compatibility simply and elegantly while providing an exceptionally stable sensor without the PN junctions of conventional micromachined sensors.

This product is geared towards industrial and commercial OEMs for small to high volume applications. Standard configurations are suitable for many applications. Please contact factory for your customization needs.

STANDARD RANGES

Range (psi)	Range (Bar)	Gage/Compound
0 to 100	0 to 007	•
0 to 200	0 to 010	•
0 to 300	0 to 020	•
0 to 500	0 to 035	•
0 to 01k	0 to 070	•
0 to 03k	0 to 200	•
0 to 05k	0 to 350	•
0 to 10k	0 to 700	•
0 to 15k	0 to 01k	•

ALL INTERMEDIATE RANGES ARE STANDARD

PERFORMANCE SPECIFICATIONS (ANALOG)

Supply Voltage: 5.0V, Ambient Temperature: 25°C (unless otherwise specified)

PARAMETERS	MIN	TYP	MAX	UNITS	NOTES
Pressure Accuracy (RSS combined Non Linearity, Hysteresis & Repeatability)	-1		1	%Span	BFSL @ 25°C
Pressure Cycles	1.00E+6			0~F.S. Cycles	
Proof Pressure	2X			Rated	
Burst Pressure	5X		20000PSI	Rated	Whichever is less
Isolation, Body to Any Lead	50			MΩ	@ 250V_{DC}
Long Term Stability (1 year)	-0.25		0.25	%Span	
Zero Thermal Error	-2.0		2.0	%Span	Over comp. temp
Span Thermal Error	-2.0		2.0	%Span	Over comp. temp
Zero Offset (mV Output)	-3.0		3.0	%Span	@ 25°C
Zero Offset (V Output)	-2.0		2.0	%Span	@ 25°C
Span Tolerance	-2.0		2.0	%Span	@ 25°C
Compensated Temperature	0		55	°C	
Operating Temperature	-20		+85	°C	
Storage Temperature	-40		+85	°C	
Load Resistance (R_L, mV Output)	1			MΩ	
Load Resistance (R_L, V Output)	5			KΩ	
Response Time		1		ms	
Shock	50g, 11 msec Half Sine Shock per MIL-STD-202G, Method 213B, Condition A				
Vibration	±20g, MIL-STD-810C, Procedure 514.2-2, Curve L				
Wetted Material (except elastomer seal)	17-4PH or 316L Stainless Steel				

For custom configurations, consult factory.

PERFORMANCE SPECIFICATIONS (DIGITAL)

Supply Voltage: 3.3V, Ambient Temperature: 25°C (unless otherwise specified)

PARAMETERS	MIN	TYP	MAX	UNITS	NOTES
Supply Voltage	2.7		5.0	V_{DC}	
Output at Zero Pressure	720	1000	1280	Count	
Output at FS Pressure	14720	15000	15280	Count	
Current Consumption			3.5	mA	
Current Consumption (Sleep mode)			5	uA	
Proof Pressure	2X			Rated	
Burst Pressure	5X		20000PSI	Rated	Whichever is less
Isolation, Body to Any Lead	50			MΩ	@ 250V_{DC}
Pressure Cycles	1.00E+6			0~F.S. Cycles	
Pressure Accuracy (RSS combined Non Linearity, Hysteresis & Repeatability)	-1		1	%Span	BFSL @ 25°C
Temperature Accuracy	-3		3	°C	1
Zero Thermal Error	-2.0		2.0	%Span	Over comp. temp
Span Thermal Error	-2.0		2.0	%Span	Over comp. temp
Long Term Stability (1 year)	-0.25		0.25	%Span	@ 25°C
Compensated Temperature	0		55	°C	
Compensated Temperature Output	512		1075	Count	
Response time			3	ms @ 4MHz	Non-sleep mode, 2
Response time			8.4	ms @ 4MHz	Sleep mode, 2
Operating Temperature	-20		+85	°C	
Storage Temperature	-40		+85	°C	
Shock	50g, 11 msec Half Sine Shock per MIL-STD-202G, Method 213B, Condition A				
Vibration	±20g, MIL-STD-810C, Procedure 514.2-2, Curve L				
Wetted Material (except elastomer seal)	17-4PH or 316L Stainless Steel				

For custom configurations, consult factory.

Notes

1. Reflect pressure port diaphragm temperature over the compensated temperature range.
2. Response time is from power on to reading measurement data.

DIMENSIONS

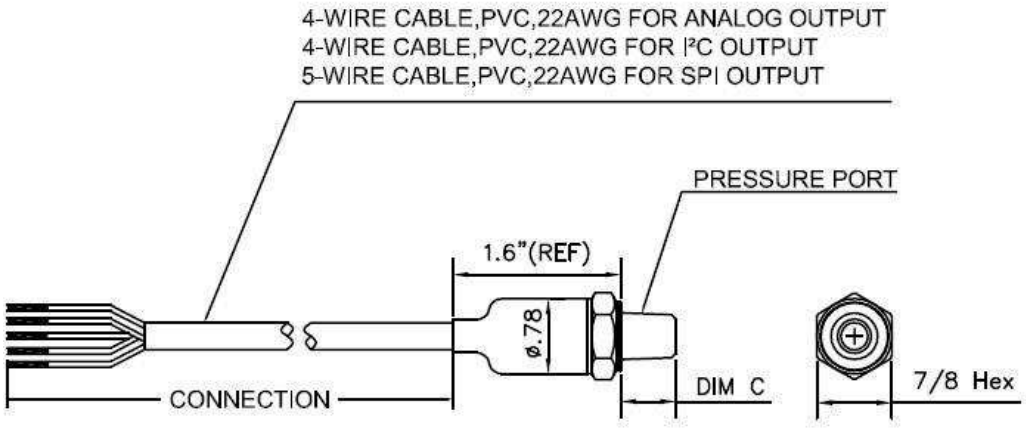

CODE	PORT	DIM C
2	1/4-19 BSPP	0.453[11.50]
4	7/16-20 UNF-A MALE SAE J514 STRAIGHT THREAD O-RING BUNA-N 70SH-904, ID8.92mm x W1.83mm	0.435[11.05]
5	1/4-18 NPT	0.596[15.14]
6	1/8-27 NPT	0.475[12.06]
E	1/4-19 BSPT	0.50[12.70]
F	1/4-19 BSPP FEMALE	0.70[17.78]
K	1/8-27 NPT FEMALE	0.70[17.78]
P	7/16-20 UNF-2A FEMALE SAE J514 STRAIGHT THREAD WITH INTEGRAL VALVE DEPRESSOR	0.689[17.50]
Q	M10 x 1.0 mm	0.42[10.67]
S	M12 x 1.5 mm	0.53[13.46]
U	G/14 DIN 3852 FORM E GASKET DIN3869-14 NBR	0.519[13.18]
W	M20 x 1.5 mm	0.702[17.83]

CODE	CONNECTION TYPE
1	CABLE 2 FT
2	CABLE 4 FT
3	CABLE 10 FT
M	CABLE 1 M
N	CABLE 2 M
P	CABLE 5 M (ANALOG ONLY)
R	CABLE 10 M (ANALOG ONLY)

NOTE: FOR PRESSURE PORT CODE 'W', TYPICAL HEX DIMENSION WILL BE 1.260[32.00]

OUTPUT (ANALOG)

Code	Output	Supply	Ratiometricity	Red	Black	Green	White
1	0 – 50mV	5V	Yes	+Supply	-Supply	+Output	-Output
2	0 – 100mV	5V	Yes	+Supply	-Supply	+Output	-Output
3	0.5 – 4.5V	5 ± 0.25V	Yes	+Supply	Common	Cut Off	+Output
4	1 – 5V	10 – 30V	No	+Supply	Common	Cut Off	+Output
5	4 – 20mA	9 – 30V	No	+Supply	-Supply	Cut Off	Cut Off

OUTPUT (DIGITAL)

Code	Output	Supply	Red	Black	Green	White	Yellow
J	I^2C	2.7 – 5.0V	+Supply	-Supply	SCL	SDA	--
S	SPI	2.7 – 5.0V	+Supply	-Supply	SCLK	MISO	SS

PRESSURE OUTPUT

SENSOR OUTPUT AT SIGNIFICANT PERCENTAGES

% OUTPUT	DIGITAL COUNTS (DECIMAL)	DIGITAL COUNTS (HEX)
0%	1000	0 × 3E8
5%	1700	0 × 6A4
10%	2400	0 × 960
50%	8000	0 × 1F40
90%	13600	0 × 3520
95%	14300	0 × 37DC
100%	15000	0 × 3A98

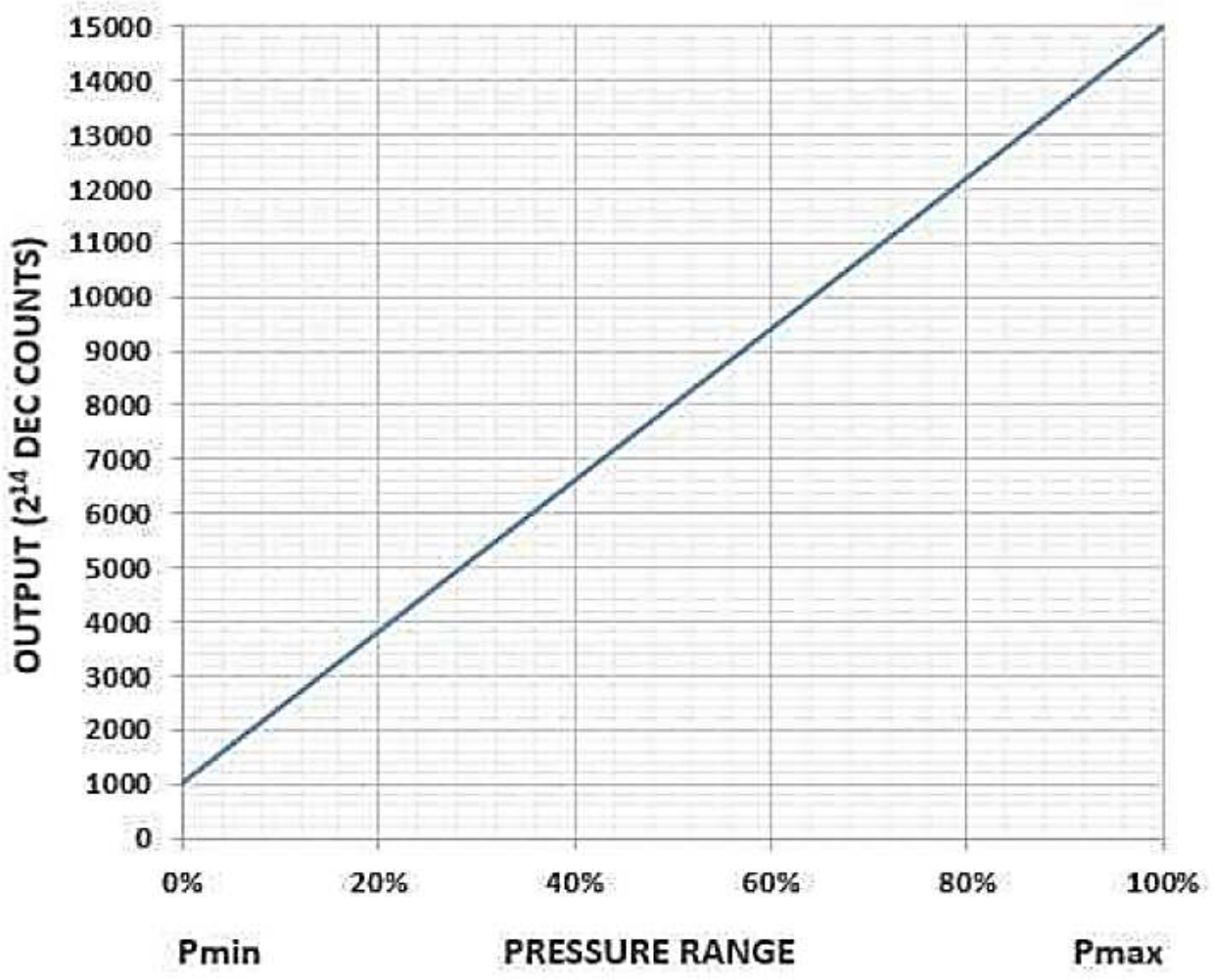

$$\text{OUTPUT (DECIMAL COUNTS)} = \frac{15000-1000}{Pmax - Pmin} \times (Papplied - Pmin) + 1000$$

TEMPERATURE OUTPUT

TEMPERATURE OUTPUT

OUTPUT °C	DIGITAL COUNTS (DECIMAL)	DIGITAL COUNTS (HEX)
0	512	0 × 200
10	614	0 × 266
25	767	0 × 2FF
40	921	0 × 399
55	1075	0 × 433

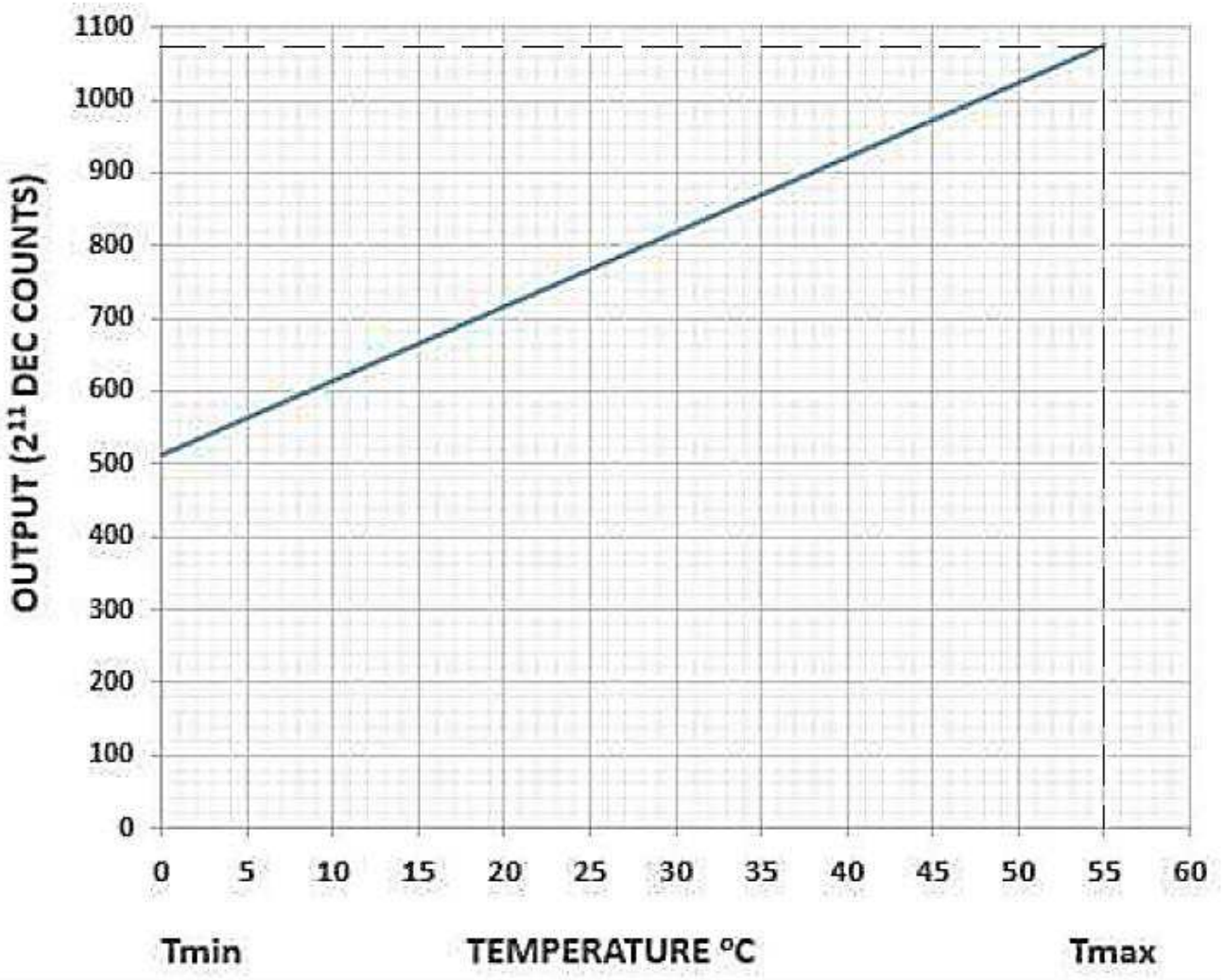

$$\text{OUTPUT (DECIMAL COUNTS)} = \frac{(\text{OUTPUT°C}+50°\text{C})\times 2048}{150℃ - (-50℃)}$$

ORDERING INFORMATION

M30 3 3 – 1 0 0 0 0 K – 350B G

Output		
Code	Output Signal	Supply Voltage
1	0-50mV	5V
2	0-100mV	5V
3	0.5-4.5V	5±0.25V
4	1-5V	10-30V
5	4-20mA	9-30V
J*	I²C	2.7-5.0V
S*	SPI	2.7-5.0V

*Digital Options

Cable Length	
1	2 feet
2	4 feet
3	10 feet
M	1 meter
N	2 meter
P	5 meter (Analog only)
R	10 meter (Analog only)

Port Material	
0	17-4PH Stainless Steel
1	316L Stainless Steel

Cleaning	
0	No Selection
1	Oxygen Clean B40.1, Level IV

Sleep (Digital Only)	
0	Non-sleep Mode
1	Sleep Mode

Code Address for I²C (Digital Only)	
0	0X28H
1	0x36H
2	0x46H
3	0x48H
4	0x51H

SPI Default Code '0'

Pressure Reference	
G	Gauge
C	Compound

Pressure Ranges	
Psi Std	Bar Std
100P	007B
200P	010B
300P	020B
500P	035B
01KP	070B
03KP	200B
05KP	350B
10KP	700B
15KP	01KB

All Intermediate Ranges are Standard

Pressure Port		
Code	**Port Type**	**Dim C**
2	1/4-19 BSPP	0.453[11.50]
4	7/16-20 UNF-2A Male SAE J514 Straight Thread O-Ring Boss O-Ring BUNA-N 70SH-904 ID8.92mm X W1.83mm	0.435[11.05]
5	1/4-18 NPT	0.596[15.14]
6	1/8-27 NPT	0.475[12.06]
E	1/4-19 BSPT	0.50[12.70]
F	1/4-19 BSPP Female	0.70[17.78]
K	1/8-27 NPT Female	0.70[17.78]
P	7/16-20 UNF-2A Female SAE J514 Straight Thread w/ Integral Valve Depressor	0.689[17.50]
Q	M10x1.0mm	0.420[10.67]
S	M12x1.5mm	0.53[13.90]
U	G1/4 DIN 3852 Form E Gasket DIN3869-14 NBR	0.547[13.90]
W	M20 x 1.5mm	0.702[17.83]

OLD ORDERING INFORMATION

MSP-300-100 – P – 5 – P – 1

Pressure Ranges	
Psi Std	Bar Std
100	007
200	010
300	020
500	035
01K	070
03K	200
05K	350
10K	700
15K	01K

All Intermediate Ranges are Standard

Cable Length	
1	2 feet
2	4 feet
3	10 feet
M	1 meter
N	2 meter
P	5 meter
R	10 meter

Pressure Unit	
P	Psi
B	Bar

Output		
Code	Output Signal	Supply Voltage
1	0-50mV	5V
2	0-100mV	5V
3	0.5-4.5V	5±0.25V
4	1-5V	10-30V
5	4-20mA	9-30V

Code	Port Type
B	1/4-19 BSPP
D	7/16-20 UNF-2A Male SAE J514 Straight Thread O-Ring Boss O-Ring BUNA-N 70SH-904 ID8.92mm X W1.83mm
N	1/4-18 NPT
A	1/8-27 NPT
E	1/4-19 BSPT
F	1/4-19 BSPP Female
H	1/8-27 NPT Female
P	7/16-20 UNF-2A Female SAE J514 Straight Thread w/ Integral Valve Depressor
Q	M10x1.0mm
S	M12x1.5mm
C	G1/4 DIN 3852 Form E Gasket DIN3869-14 NBR
W	M20 x 1.5mm

NORTH AMERICA
Measurement Specialties, Inc.,
a TE Connectivity Company
Phone: 800-522-6752
Email: customercare.frmt@te.com

EUROPE
Measurement Specialties (Europe), Ltd.,
a TE Connectivity Company
Phone: +31 73 624 6999
Email: customercare.lcsb@te.com

ASIA
Measurement Specialties (China), Ltd.,
a TE Connectivity Company
Phone: 0400-820-6015
Email: customercare.shzn@te.com

TE.com/sensorsolutions

Measurement Specialties, Inc., a TE Connectivity company.

Measurement Specialties, TE Connectivity, TE Connectivity (logo) and EVERY CONNECTION COUNTS are trademarks. All other logos, products and/or company names referred to herein might be trademarks of their respective owners.

The information given herein, including drawings, illustrations and schematics which are intended for illustration purposes only, is believed to be reliable. However, TE Connectivity makes no warranties as to its accuracy or completeness and disclaims any liability in connection with its use. TE Connectivity's obligations shall only be as set forth in TE Connectivity's Standard Terms and Conditions of Sale for this product and in no case will TE Connectivity be liable for any incidental, indirect or consequential damages arising out of the sale, resale, use or misuse of the product. Users of TE Connectivity products should make their own evaluation to determine the suitability of each such product for the specific application.

© 2015 TE Connectivity Ltd. family of companies All Rights Reserved.

INTERFACING TO TE DIGITAL PRESSURE MODULES

The TE series of digital pressure sensors uses the latest CMOS sensor conditioning circuitry (SSC) to create a low cost, high performance digital output pressure (14-bit) and temperature (11-bit) sensor designed to meet the strictest requirements from OEM customers.

The MS45x5DO, 85BSD, 85FBSD, 86BSD,154BSD, MSP100(DO) and MSP300(DO) , M3200(DO), FX29(DO) and FS30(DO)are the latest offering from TE to offer digital communication to pressure sensor OEMs.

I²C AND SPI INTERFACE SPECIFICATIONS

1. I²C Interface Specification

The I²C interface is a simple 8-bit protocol using a serial data line (SDA) and a serial clock line (SCL) where each device connected to the bus is software addressable by a unique address. For detailed specifications of the I²C protocol, see The I²C Bus Specification, Version 2.1, January 2000.

1.1 Interface Connection-External

Bi-directional bus lines are implemented by the devices (master and slave) using open-drain output stages and a pull-up resistor connected to the positive supply voltage. The recommended pull-up resistor value depends on the system setup (capacitance of the circuit or cable and bus clock frequency). In most cases, 4.7kΩ is a reasonable choice. The capacitive loads on SDA and SCL line have to be the same. It is important to avoid asymmetric capacitive loads.

I²C Transmission Start Condition

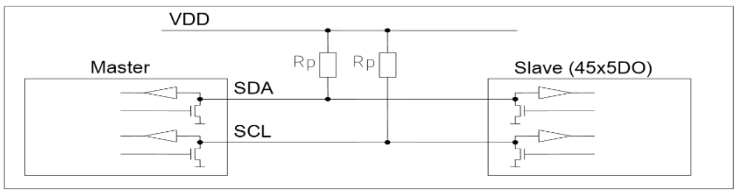

Both bus lines, SDA and SCL, are bi-directional and therefore require an external pull-up resistor.

1.2 I²C Address

The I²C address consists of a 7-digit binary value. The factory setting for the I²C slave address is 0x28, 0x36 or 0x46 depending on the interface type selected from the ordering information. The address is always followed by a write bit (0) or read bit (1). The default hexadecimal I²C header for read access to the sensor is therefore 0x51, 0x6D, 0x8D respectively, based on the ordering information.

1.3 INT/SS Pin

When programmed as an I²C device, the INT/SS pin operates as an interrupt. The INT/SS pin rises when new output data is ready and falls when the next I²C communication occurs.

1.4 Transfer Sequences

Transmission START Condition (S): The START condition is a unique situation on the bus created by the master, indicating to the slaves the beginning of a transmission sequence (the bus is considered busy after a START).

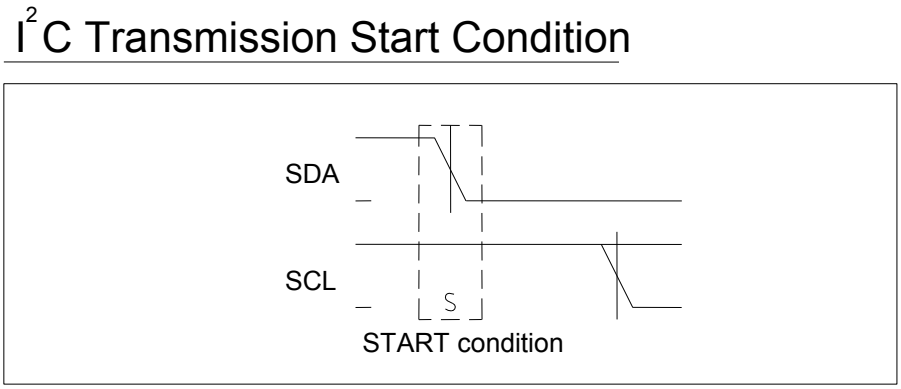

A HIGH to LOW transition on the SDA line while SCL is HIGH

Transmission STOP Condition (P): The STOP condition is a unique situation on the bus created by the master, indicating to the slaves the end of a transmission sequence (the bus is considered free after a STOP).

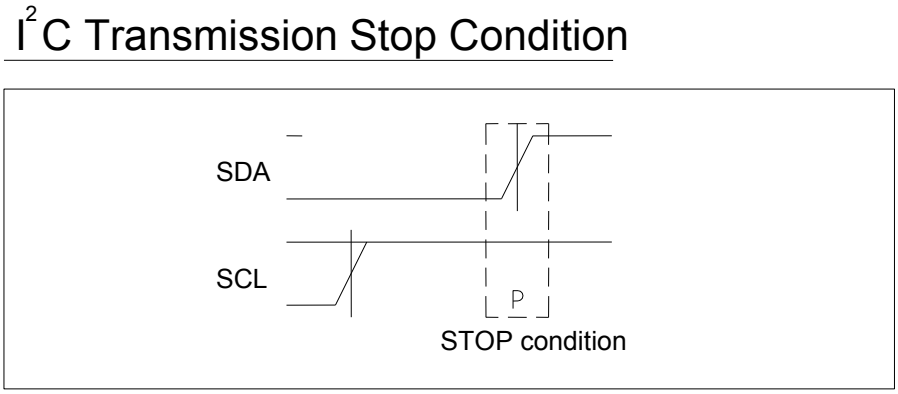

A LOW to HIGH transition on the SDA line while SCL is HIGH

Acknowledge (ACK) / Not Acknowledge (NACK): Each byte (8 bits) transmitted over the I²C bus is followed by an acknowledge condition from the receiver. This means that after the master pulls SCL low to complete the transmission of the 8th bit, SDA will be pulled low by the receiver during the 9th bit time. If after transmission of the 8th bit the receiver does not pull the SDA line low, this is considered to be a NACK condition.

If an ACK is missing during a slave to master transmission, the slave aborts the transmission and goes into idle mode.

I² C ACKNOWLEDGE / NOT ACKNOWLEDGE

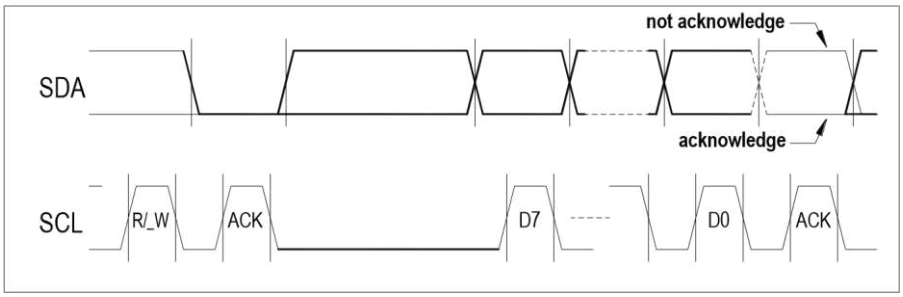

Each byte is followed by an acknowledge or a not acknowledge, generated by the receiver

1.5 Data Transfer Format

Data is transferred in byte packets in the I²C protocol, which means in 8-bit frames. Each byte is followed by an acknowledge bit. Data is transferred with the most significant bit (MSB) first.

A data transfer sequence is initiated by the master generating the Start condition (S) and sending a header byte. The I²C header consists of the 7-bit I²C device address and the data direction bit (R/_W).

The value of the R/_W bit in the header determines the data direction for the rest of the data transfer sequence. If R/_W = 0 (WRITE), the direction remains master-to-slave, while if R/_W = 1 (READ), the direction changes to slave-to-master after the header byte.

1.6 Command Set and Data Transfer Sequences

The I²C master command starts with the 7-bit slave address with the 8th bit = 1 (READ). The sensor acts as the slave and sends an acknowledge (ACK) indicating success. The sensor has four I²C read commands: Read_MR, Read_DF2, Read_DF3, and Read_DF4.Figure 1.6 shows the structure of the measurement packet of the four I²C read commands, which are explained in sections 1.6.1.

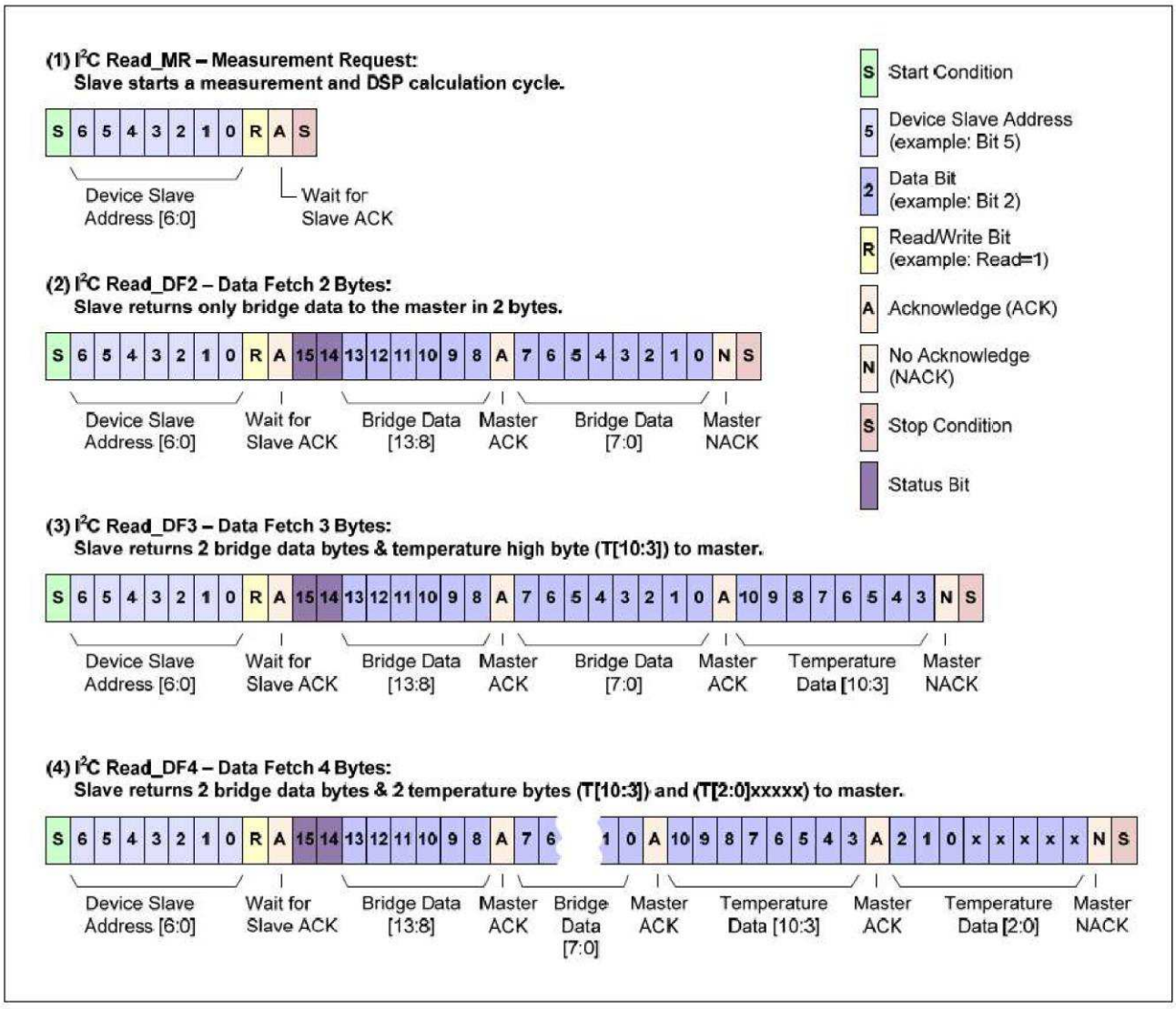

1.6.1 Figure 1.6 – I²C Measurement Packet ReadsI²C Read_DF (Data Fetch)

For Data Fetch commands, the number of data bytes returned by the sensor, is determined when the master sends the NACK and stop condition. For the Read_DF3 data fetch command (Data Fetch 3 Bytes; see example 3 in Figure 1.6), the sensor returns three bytes in response to the master sending the slave address and the READ bit (1): two bytes of bridge data with the two status bits as the MSBs and then 1 byte of temperature data (8-bit accuracy). After receiving the required number of data bytes, the master sends the NACK and stop condition to terminate the read operation. For the Read_DF4 command, the master delays sending the NACK and continues reading an additional final byte to acquire the full corrected 11-bit temperature measurement. In this case, the last 5 bits of the final byte of the packet are undetermined and should be masked off in the application. The Read_DF2 command is used if corrected temperature is not required. The master terminates the READ operation after the two bytes of bridge data (see example 2 in Figure 1.6).

The two status bits (Bit 15 and Bit 14) give an indication of stale or valid data depending on their value. A returned value of 00 indicate “normal operation and a good data packet” while a returned value of 10 indicates “stale data that has been already fetched”. See section 1.7 for additional details. Users that use “status bit” polling should select a frequency slower than 20% more than the update time.

1.7 Status Bits and Diagnostic Features

The table below summarizes the status bits conditions indicated by the 2 MSBs (Bit (15:14) of I²C data packet, S(1:0) of SPI data packet of the bridge high byte data.

Table 1: Status Bits Encoding

Status Bits (2 MSB of Output Data Packet)	Definition
00	Normal Operation. Good Data Packet
01	Reserved
10	Stale Data. Data has been fetched since last measurement cycle.
11	Fault Detected

The SSC is has on board diagnostic features to ensure robust system operation in the most “mission-critical” applications. A status bit value of “11” indicates a fault condition in the SSC or sensing element. All diagnostics are detected in the next measurement cycle and reported in the subsequent data fetch. Once a diagnostic is reported, the diagnostic status bits will not change unless both the cause of the diagnostic is fixed and a power-on-reset is performed.

1.8 I^2C Protocol Differences

There are three differences in the described above protocol compared with original I^2C protocol:

- Sending a start-stop condition without any transitions on the SCL line (no clock pulses in between) creates a communication error for the next communication, even if the next start condition is correct and the clock pulse is applied. An additional start condition must be sent, which results in restoration of proper communication.
- The restart condition – a falling SDA edge during data transmission when the SCL clock line is still high – creates the same situation. The next communication fails, and an additional start condition must be sent for correct communication.
- A falling SDA edge is not allowed between the start condition and the first rising SCL edge. If using an I^2C address with the first bit 0, SDA must be held down from the start condition through the first bit.

2. SPI Interface Specification

SPI is a general-purpose synchronous serial interface. During an SPI transfer, transmit and receive data is simultaneously shifted out and in serially. A serial clock line synchronizes the shifting and sampling of the information on two serial data lines.

SPI devices communicate using a master-slave relationship. Due to its lack of built-in device addressing, SPI requires more effort and more hardware resources than I^2C when more than one slave is involved. But SPI tends to be simpler and more efficient than I^2C in point-to-point (single master, single slave) applications for the very same reason; the lack of device addressing means less overhead.

The SPI interface is programmed for falling-edge MISO change.

2.1 SPI Read_DF (Data Fetch)

The SPI interface will have data change after the falling edge of SCLK. The master should sample MISO on the rise of SCLK. The entire output packet is 4 bytes (32 bits). The high bridge data byte comes first, followed by the low bridge data byte. Then 11 bits of corrected temperature (T[10:0]) are sent: first the T[10:3]byte and then the {T[2:0],xxxxx} byte. The last 5 bits of the final byte are undetermined and should be masked off in the application. If the user only requires the corrected bridge value, the read can be terminated after the 2nd byte. If the corrected temperature is also required but only at an 8-bit resolution, the read can be terminated after the 3rd byte is read.

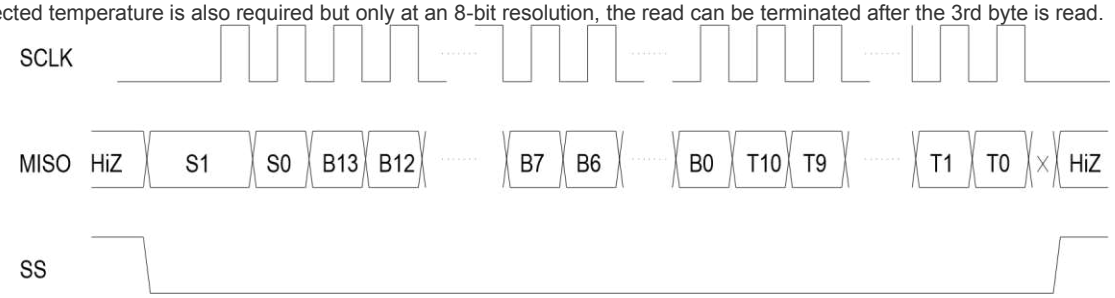

Packet = [{S(1:0),B(13:8)},{B(7:0)},{T(10:3)},{T(2:0),xxxxx}] Where

S(1:0) = Status bits of packet (normal, command, busy, diagnostic) B(13:8) = Upper 6 bits of 14-bit bridge data.

B(7:0) = Lower 8 bits of 14-bit bridge data.

T(10:3) = Corrected temperature data (if application does not require corrected temperature, terminate read early) T(2:0),xxxxx =. Remaining bits of corrected temperature data for full 11-bit resolution

HiZ = High impedance

Figure 2.2 – SPI Output Packet with Falling Edge SPI_Polarity

TIMING DIAGRAMS

I^2C INTERFACE PARAMETERS

PARAMETERS	SYMBOL	MIN	TYP	MAX	UNITS
SCLK CLOCK FREQUENCY	f_{SCL}	100		400	KHz
START CONDITION HOLD TIME RELATIVE TO SCL EDGE	t_{HDSTA}	0.1			uS
MINIMUM SCL CLOCK LOW WIDTH [1]	t_{LOW}	0.6			uS
MINIMUM SCL CLOCK HIGH WIDTH [1]	t_{HIGH}	0.6			uS
START CONDITION SETUP TIME RELATIVE TO SCL EDGE	t_{SUSTA}	0.1			uS
DATA HOLD TIME ON SDA RELATIVE TO SCL EDGE	t_{HDDAT}	0			uS
DATA SETUP TIME ON SDA RELATIVE TO SCL EDGE	t_{SUDAT}	0.1			uS
STOP CONDITION SETUP TIME ON SCL	t_{SUSTO}	0.1			uS
BUS FREE TIME BETWEEN STOP AND START CONDITION	t_{BUS}	2			uS

[1]COMBINED LOW AND HIGH WIDTHS MUST EQUAL OR EXCEED MINIMUM SCL PERIOD.

I2C Timing Diagram

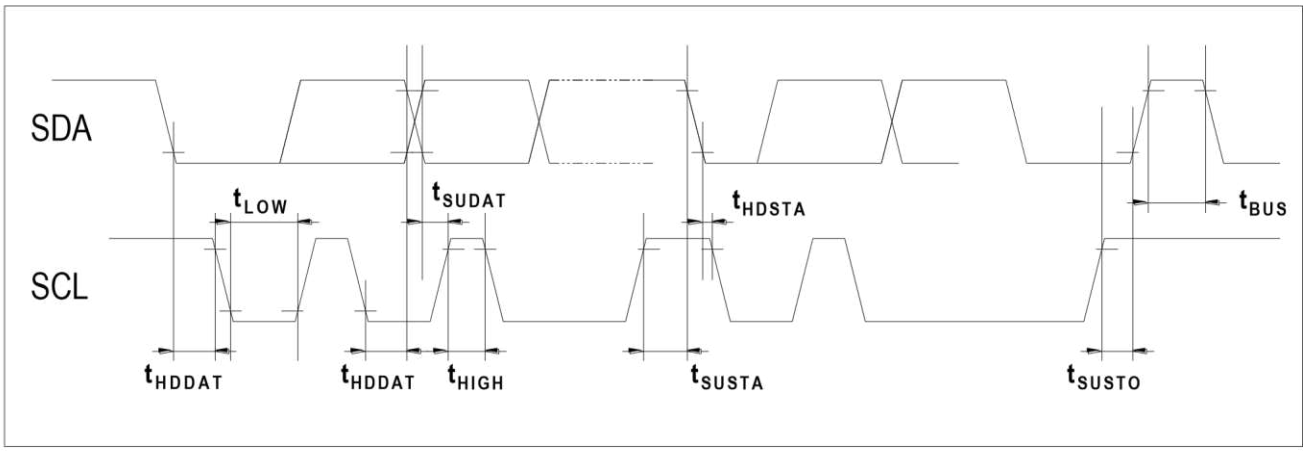

SPI INTERFACE PARAMETERS

PARAMETERS	SYMBOL	MIN	TYP	MAX	UNITS
SCLK CLOCK FREQUENCY	f_{SCL}	50		800	KHz
SS DROP TO FIRST CLOCK EDGE	t_{HDSS}	2.5			uS
MINIMUM SCL CLOCK LOW WIDTH [1]	t_{LOW}	0.6			uS
MINIMUM SCL CLOCK HIGH WIDTH [1]	t_{HIGH}	0.6			uS
CLOCK EDGE TO DATA TRANSITION	t_{CLKD}	0		0.1	uS
RISE OF SS RELATIVE TO LAST CLOCK EDGE	t_{SUSS}	0.1			uS
BUS FREE TIME BETWEEN RISE AND FALL OF SS	t_{BUS}	?			uS

[1] COMBINED LOW AND HIGH WIDTHS MUST EQUAL OR EXCEED MINIMUM SCLK PERIOD.

SPI TIMING DIAGRAM

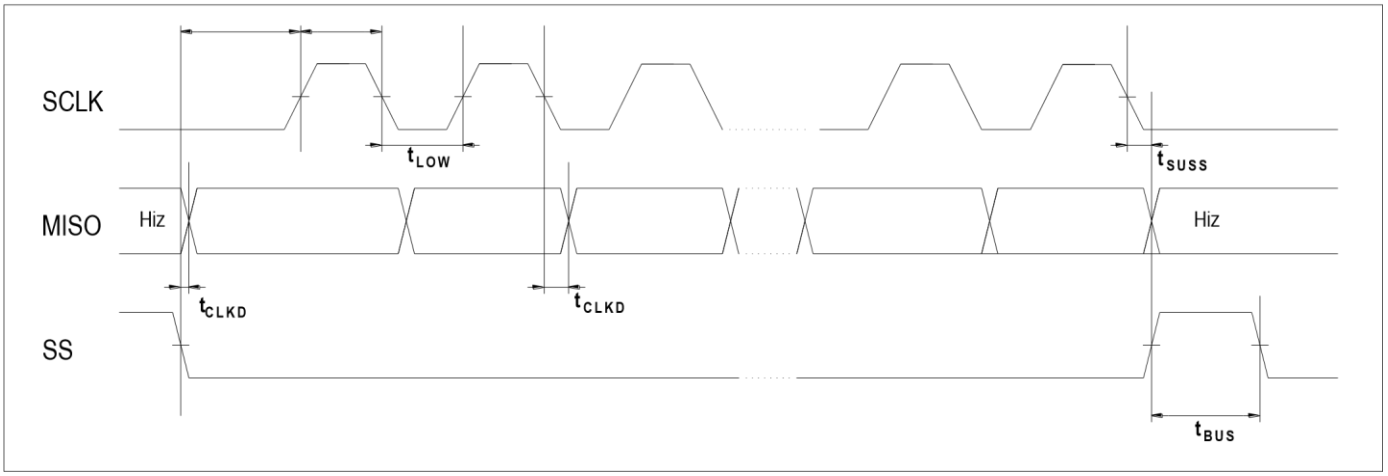

C Code Example For FX29

```
//Note: The C code is use for communication with FX29K0-040B-0100-L using STM32L031.
//        This routine is applicable to other models mentioned in this document.
#include "main.h"
#include "stm32l0xx_hal.h"
#include "stdlib.h"
#include "delay.h"
#include "config.h"

u8 temp[7];
float Tscope,Pscope,Tdisplay,Pdisplay;
float Lmax=100,Lmin=0 ; //Span 100L,  Zero 0L, Span should be defined by the sensor pressure range of customer used. 100 means pressure range of 100L
u32 Pvalue,Tvalue,Tspan,Pspan;
u16 P1=1000,P2=15000;

void SDA_IN2(void);
void SDA_OUT2(void);
void IIC_Start2(void);
void IIC_Stop2(void);
unsigned char IIC_Wait_Ack2(void);
void IIC_Ack2(void);
void IIC_NAck2(void);
void IIC_Send_Byte(unsigned char txd);
unsigned char IIC_Read_Byte(unsigned char ack);
float Get_I2CValue(void);

void SDA_IN2()
{
        GPIO_InitTypeDef  GPIO_InitStructure;
        GPIO_InitStructure.Pin = SDA2_Pin;
  GPIO_InitStructure.Mode = GPIO_MODE_INPUT;
  GPIO_InitStructure.Pull = GPIO_NOPULL;
  //GPIO_InitStructure.Alternate = GPIO_PuPd_UP;
  GPIO_InitStructure.Speed = GPIO_SPEED_FREQ_LOW;
  HAL_GPIO_Init(SDA2_GPIO_Port, &GPIO_InitStructure);
}
void SDA_OUT2()
{
        GPIO_InitTypeDef  GPIO_InitStructure;
        GPIO_InitStructure.Pin = SDA2_Pin;
```

```
  GPIO_InitStructure.Mode = GPIO_MODE_OUTPUT_PP;
  GPIO_InitStructure.Pull = GPIO_NOPULL;
        GPIO_InitStructure.Speed = GPIO_SPEED_FREQ_LOW;
  HAL_GPIO_Init(SDA2_GPIO_Port, &GPIO_InitStructure);
}
void IIC_Start2()
{
        SDA_OUT2();     //sda???
        Sensor_SDA_ON ;
        Sensor_SCL_ON;
        delay_us(4);
        Sensor_SDA_OFF;//START:when CLK is high,DATA change form high to low
        delay_us(4);
        Sensor_SCL_OFF;//??I2C??,?????????
}
void IIC_Stop2()
{
        SDA_OUT2();//sda???
        Sensor_SCL_OFF;
        Sensor_SDA_OFF;//STOP:when CLK is high DATA change form low to high
        delay_us(4);
        Sensor_SCL_ON;
        Sensor_SDA_ON ;//??I2C??????
        delay_us(4);
}
unsigned char IIC_Wait_Ack2()
{
        unsigned char ucErrTime=0;
        SDA_IN2();      //SDA?????
        Sensor_SDA_ON ;delay_us(1);
        Sensor_SCL_ON;delay_us(1);
        while(READ_Sensor_SDA)
        {
                ucErrTime++;
                if(ucErrTime>250)
                {
                        IIC_Stop2();
                        return 1;
                }
        }
```

```
        Sensor_SCL_OFF;//????0
        return 0;
}
void IIC_Ack2()
{
        Sensor_SCL_OFF;
        SDA_OUT2();
        Sensor_SDA_OFF;
        delay_us(2);
        Sensor_SCL_ON;
        delay_us(2);
        Sensor_SCL_OFF;
}
void IIC_NAck2()
{
        Sensor_SCL_OFF;
        SDA_OUT2();
        Sensor_SDA_ON;
        delay_us(2);
        Sensor_SCL_ON;
        delay_us(2);
        Sensor_SCL_OFF;
}
void IIC_Send_Byte(unsigned char txd)
{
   unsigned char t;
                SDA_OUT2();
   Sensor_SCL_OFF;//??????????
   for(t=0;t<8;t++)
   {
                                if(txd&0x80)
                                {Sensor_SDA_ON;}
                                else
                                {Sensor_SDA_OFF;}
      txd<<=1;
                delay_us(2);   //?TEA5767??????????
                Sensor_SCL_ON;
                delay_us(2);
                Sensor_SCL_OFF;
                delay_us(2);
```

```
    }
}
unsigned char IIC_Read_Byte(unsigned char ack)
{
        unsigned char i,receive=0;
        SDA_IN2();//SDA?????
  for(i=0;i<8;i++ )
        {
                Sensor_SCL_OFF;
                delay_us(2);
                Sensor_SCL_ON;
                receive<<=1;
    if(READ_Sensor_SDA)receive++;
                delay_us(1);
    }
    if (!ack)
       IIC_NAck2();//??nACK
    else
       IIC_Ack2(); //??ACK
    return receive;
}
u8 I2C_ERR=0;
float Get_I2CValue()
{
                //Wake_up,   if non-sleep mode this part is no needed.
                IIC_Start2();           //MR command
    IIC_Send_Byte(0x51);
                IIC_Wait_Ack2();
                IIC_Stop2();
                HAL_Delay(2);                                                   //2ms
delay
                ////////////////////////////////////////////////////////////////////////////////

                IIC_Start2();           //DF4
    IIC_Send_Byte(0x51);
    IIC_Wait_Ack2();
                temp[0]=IIC_Read_Byte(1);
                temp[1]=IIC_Read_Byte(1);
                temp[2]=IIC_Read_Byte(1);
                temp[3]=IIC_Read_Byte(0);
```

```
    IIC_Stop2();
                if((temp[0]&0xc0)==0x00)
                {
                        Pvalue=(temp[0]<<8) |       temp[1];
                        Tvalue=(temp[2]<<3) |       (temp[3]>>5);
                        I2C_ERR=0;
                }
                else
                        I2C_ERR=1;

                Tscope=200;//-50~150
                Tspan=2048;//11bit

        if(I2C_ERR==0)
        {
                Pspan=P2-P1;
                Tdisplay=Tvalue*Tscope/Tspan-50;
                Pdisplay=Pvalue*(Lmax-Lmin)/Pspan+Lmin;//100L
        }
        return Pdisplay;
}
```

NORTH AMERICA
Measurement Specialties, Inc., a
TE Connectivity company 45738
Northport Loop West
Fremont, CA 94538
Tel: +1 800 767 1888
Fax: +1 510 498 1578
customercare.frmt@te.com

EUROPE
MEAS Switzerland Sarl, a
TE Connectivity company
Ch. Chapons-des-Prés 11 CH-
2022 Bevaix
Tel: +41 32 847 9550
Fax: +41 32 847 9569
customercare.bevx@te.com

ASIA
Measurement Specialties (China) Ltd.,
a TE Connectivity company
No. 26 Langshan Road
Shenzhen High-Tech Park (North) Nanshan District,
Shenzhen, 518057
China
Tel: +86 755 3330 5088
Fax: +86 755 3330 5099
customercare.shzn@te.com

te.com/sensorsolutions

Measurement Specialties, Inc., a TE Connectivity company.

Measurement Specialties (MEAS), American Sensor Technologies (AST), TE Connectivity, TE Connectivity (logo) and EVERY CONNECTION COUNTS are trademarks. All other logos, products and/or company names referred to herein might be trademarks of their respective owners.

The information given herein, including drawings, illustrations and schematics which are intended for illustration purposes only, is believed to be reliable. However, TE Connectivity makes no warranties as to its accuracy or completeness and disclaims any liability in connection with its use. TE Connectivity's obligations shall only be as set forth in TE Connectivity's Standard Terms and Conditions of Sale for this product and in no case will TE Connectivity be liable for any incidental, indirect or consequential damages arising out of the sale, resale, use or misuse of the product. Users of TE Connectivity products should make their own evaluation to determine the suitability of each such product for the specific application.

© 2016 TE Connectivity Ltd. family of companies All Rights Reserved.