2-1393243-4 ✔ ACTIVE

SCHRACK | SCHRACK Power PCB Relay RT2

TE Internal #: 2-1393243-4

Power Relays, General Purpose Power Relay, Monostable, .76 VA Coil Power Rating AC, 350 Ω Coil Resistance, SCHRACK Power PCB Relay RT2

View on TE.com >

Relays & Contactors > Relays > Power Relays

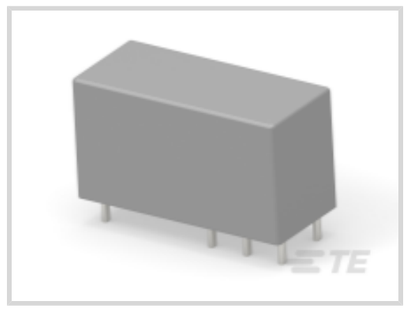
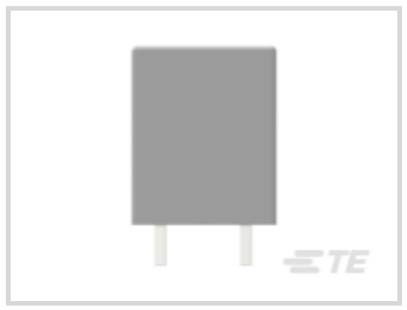

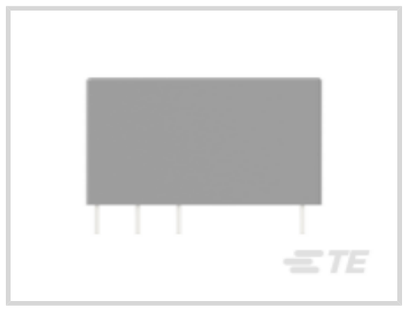


Relay Type: **General Purpose Power Relay**

Coil Magnetic System: **Monostable**

Coil Power Rating Class: **[.5 – 1 VA]**

Coil Power Rating AC: **.76 VA**

Coil Resistance: **350 Ω**

Features

Product Type Features

Relay Type	General Purpose Power Relay

Configuration Features

Coil Special Features	UL Coil Insulation Class F
Contact Arrangement	2 Form C (CO)
Contact Number of Poles	2

Electrical Characteristics

Insulation Initial Dielectric Between Open Contacts	1000 Vrms
Contact Limiting Making Current	15 A
Contact Limiting Continuous Current	8 A
Insulation Initial Dielectric Between Adjacent Contacts	2500 Vrms
Insulation Initial Dielectric Between Contacts & Coil	5000 Vrms
Contact Limiting Breaking Current	8 A
Coil Power Rating AC	.76 VA
Coil Resistance	350 Ω

Coil Voltage Rating	24 VAC
Contact Current Rating	8 A
Contact Switching Voltage (Max)	400 VAC
Contact Voltage Rating	250 VAC

Body Features

Product Weight	13 g[.459 oz]

Contact Features

Contact Plating Material	Gold
Contact Material	AgNi90/10

Termination Features

Relay Connection Type	PCB Termination
Terminal Configuration	Solder Pins

Mechanical Attachment

Product Mount Type	Printed Circuit Board

Dimensions

Insulation Clearance Between Contact & Coil	10 mm[.394 in]
Insulation Creepage Between Contact & Coil	10 mm[.394 in]
Product Width	12.7 mm[.5 in]
Product Length	29 mm[1.14 in]
Product Height	15.7 mm[.618 in]

Usage Conditions

Environmental Category of Protection	RTIII
Environmental Ambient Temperature (Max)	70 °C[158 °F]

Operation/Application

Actuating System	AC
Solder Process	Wave Solder
Coil Magnetic System	Monostable

Packaging Features

Packaging Method	Carton, Tube

Other

Length Class (Mechanical)	25 – 30 mm

Insulation Initial Dielectric Between Coil & Contact Class	4000 – 5000 V
Height Class (Mechanical)	15 – 16 mm
Width Class (Mechanical)	12 – 16 mm
	.5 – 1 VA
Contact Current Class	16 A

Product Compliance

For compliance documentation, visit the product page on TE.com>

EU RoHS Directive 2011/65/EU	Compliant
EU ELV Directive 2000/53/EC	Compliant
China RoHS 2 Directive MIIT Order No 32, 2016	No Restricted Materials Above Threshold
EU REACH Regulation (EC) No. 1907/2006	Current ECHA Candidate List: JUNE 2024 (241) Candidate List Declared Against: JAN 2024 (240) Does not contain REACH SVHC
Halogen Content	Not Low Halogen - contains Br or Cl > 900 ppm.
Solder Process Capability	Wave solder capable to 260°C

Product Compliance Disclaimer

This information is provided based on reasonable inquiry of our suppliers and represents our current actual knowledge based on the information they provided. This information is subject to change. The part numbers that TE has identified as EU RoHS compliant have a maximum concentration of 0.1% by weight in homogenous materials for lead, hexavalent chromium, mercury, PBB, PBDE, DBP, BBP, DEHP, DIBP, and 0.01% for cadmium, or qualify for an exemption to these limits as defined in the Annexes of Directive 2011/65/EU (RoHS2). Finished electrical and electronic equipment products will be CE marked as required by Directive 2011/65/EU. Components may not be CE marked. Additionally, the part numbers that TE has identified as EU ELV compliant have a maximum concentration of 0.1% by weight in homogenous materials for lead, hexavalent chromium, and mercury, and 0.01% for cadmium, or qualify for an exemption to these limits as defined in the Annexes of Directive 2000/53/EC (ELV). Regarding the REACH Regulation, the information TE provides on SVHC in articles for this part number is based on the latest European Chemicals Agency (ECHA) 'Guidance on requirements for substances in articles' posted at this URL: https://echa.europa.eu/guidance-documents/guidance-on-reach

Compatible Parts



TE Part # 6-1415035-1
RT78726

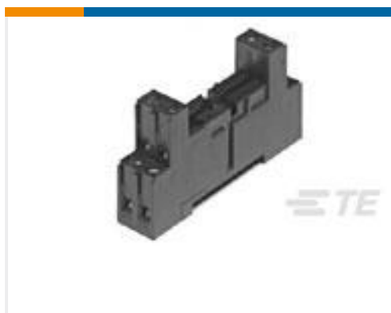

TE Part # 1860306-1
RT78725

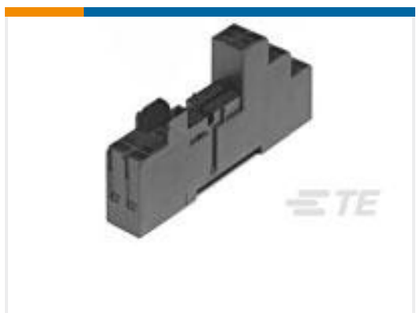

TE Part # 1860200-1
RT7872P



TE Part # 2022103-1
RT17017



TE Part # 1-1415037-1
PTMU0524



TE Part # 6-1415036-1
PTML0524

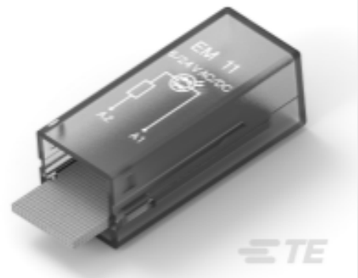

TE Part # 3-1415036-1
PTMG0524



TE Part # 3-1415037-1
PTMV0524



TE Part # 1415540-8
RT28816



TE Part # 1860991-1
RT78602, RELAY SOCKET PCB 5MM

Also in the Series | SCHRACK Power PCB Relay RT2

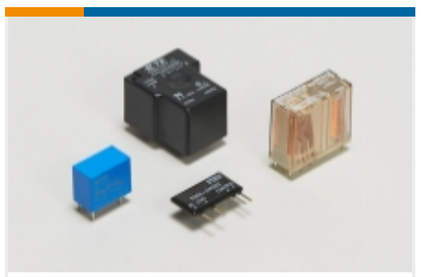

Power Relays(106)

Customers Also Bought



TE Part #5747252-4
37 MSFL PLUG RA 318 (IN,FM)



TE Part #5747871-8
09 PLUG SP/FMS INSRT



TE Part #5747150-8
09 RCPT SP/FMS INSRT



TE Part #5415025-1
JACK, RTANG, PCB, 50 OHM, BNC



TE Part #5-103635-9
10 MTE HDR SRRA LTCH.100CL LF



TE Part #5-103635-5
06 MTE HDR SRRA LTCH.100CL LF

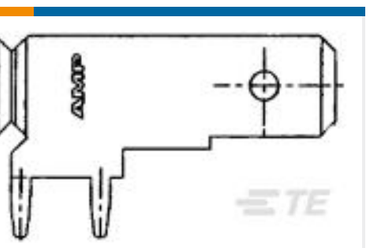

TE Part #63951-1
250 FASTON TAB TPBR



TE Part #1879061-3
CPF 0402 10R 0.1% 25PPM 5K RL



TE Part #9-1614884-3
CPF 0805 30K 0.1% 25PPM 1K RL



TE Part #329633
GASKET

Documents

CAD Files

Customer View Model

ENG_CVM_CVM_2-1393243-4_D.3d_igs.zip

English

Customer View Model

ENG_CVM_CVM_2-1393243-4_D.3d_stp.zip

English

Customer View Model

ENG_CVM_CVM_2-1393243-4_D.2d_dxf.zip

English

3D PDF

3D

By downloading the CAD file I accept and agree to the Terms and Conditions of use.

Datasheets & Catalog Pages

Power PCB Relay RT2

English

Product Specifications

Definitions General Purpose Relays

English

Agency Approvals

VDE Certificate

English