THIS DRAWING IS UNPUBLISHED. RELEASED FOR PUBLICATION NOV ,2001.
© COPYRIGHT 2001 By – ALL RIGHTS RESERVED.

LOC	DIST
J	

REVISIONS

P	LTR	DESCRIPTION	DATE	DWN	APVD
	J3	REVISED PER ECR-16-002212	15FEB16	S.Z	S.L

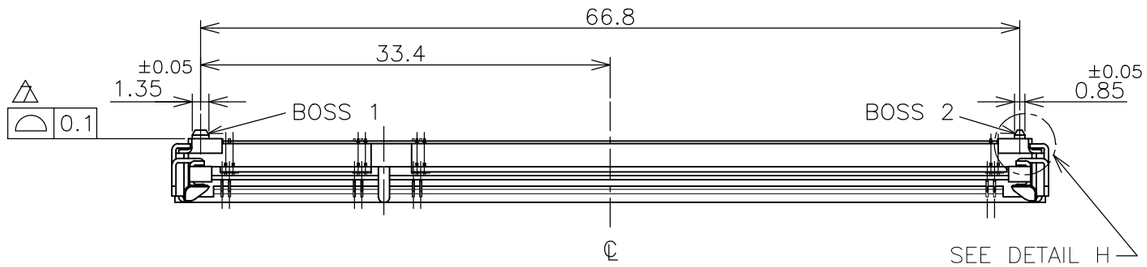

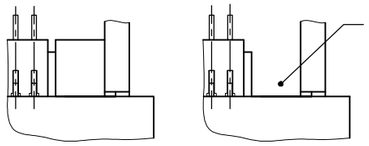

DETAIL L
(SCALE 5:1)

HOW TO MATE AND UNMATE

MATE: ① → ④
UNMATE: ⑤ → ⑦

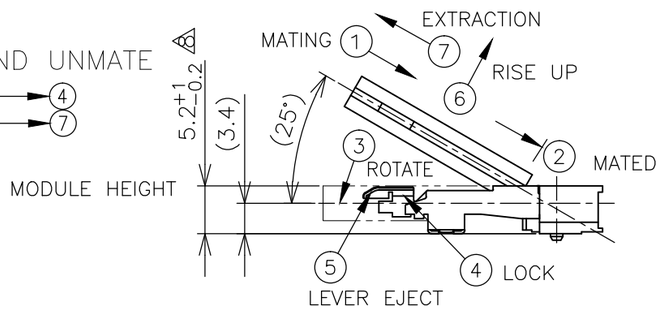

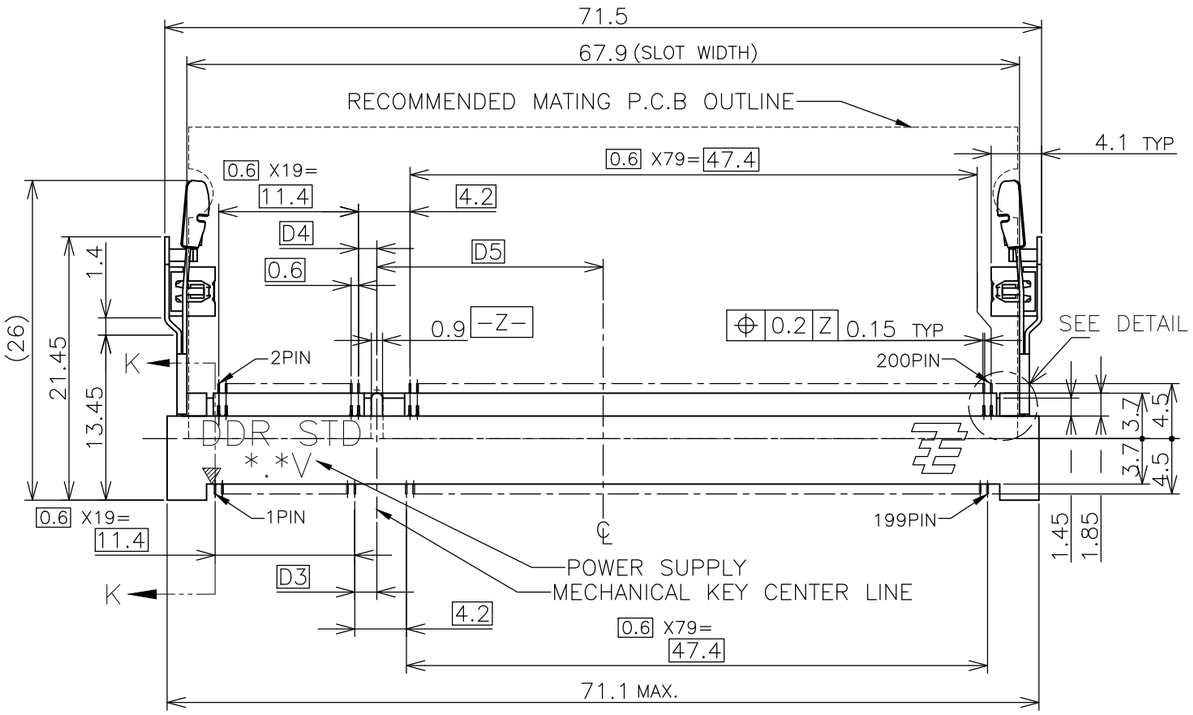

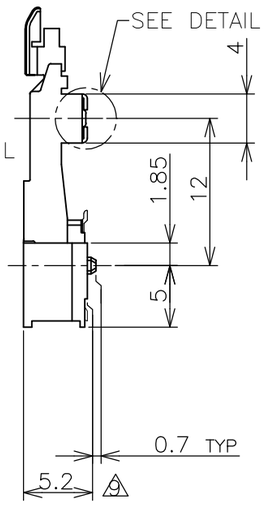

(APPLIED TO SHEET 1-2)

1. MATERIAL ; HOUSING: HIGH TEMPERATURE THERMO PLASTIC UL94V-0
   CONTACT: COPPER ARROY
   LOCK LEVER: STAINLESS STEEL
   SOLDER PEG: COPPER ARROY
2. FINISH ; CONTACT AREA: GOLD FLASH ON 0.0013MIN ALL OVER NICKEL.
   SOLDERING AREA: GOLD FLASH PLT.
   SOLDER PEG: TIN PLATING.
3. MECHANICAL KEY POSITION OF CONNECTOR SEE TABLE.
4. TOLERANCES NON-CUMULATIVE.
5. NOT TO SCALE.
6. [dashed] INSIDE MUST BE RESIST COAT EXCEPT SOLDER PATTERN.
7. COPLANARITY : 0.1 MAX.
8. THE FLOATING VALUE BY SOLDERING IS NOT INCLUDED.
9. NOT MATING CONDITION.
10. FINISH ; CONTACT AREA: 0.00076 GOLD ON 0.0013MIN ALL OVER NICKEL.
    SOLDERING AREA: 0.00076 GOLD PLT.
    SOLDER PEG: TIN PLATING.
11. IF THE MODULE DOESN'T INSERT AND LOCK IN THE LATCH SMOOTHLY, OPEN WIDE BOTH LATCHES BY MANUAL. AND THE MODULE MUST BE INSERTED AND LOCKED IN THE LATCH.

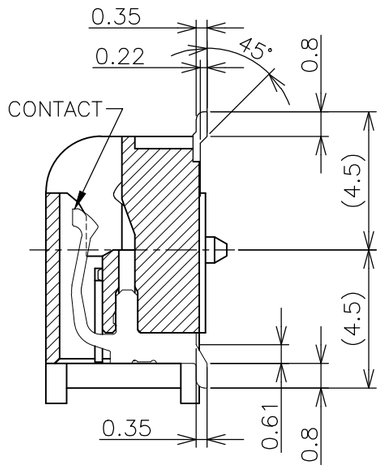

K-K
(SCALE 5:1)

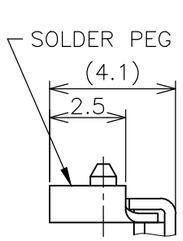

DETAIL H
(SCALE 5:1)

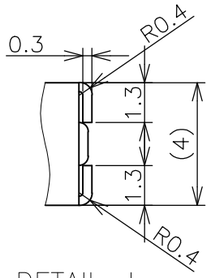

DETAIL J
(SCALE 5:1)

GENERAL TOLERANCE
10≧:±0.2
30≧ >10:±0.25
100≧ >30:±0.3
ANGLES:±3°

TYPE	FINISH	TOOLING STATUS	REMARK	POWER SUPPLY (TYPE)	D5	D4	D3	POS	PART NO.
TYPE 1	⑩	AVAILABLE	——H——	2.5V (DDR1)	18.45	1.5	1.8	200	1473005-5
TYPE 2	②	AVAILABLE	BOSSLESS	1.8V (DDR2)	17.55	2.4	2.7	200	1-1473005-4
TYPE 2	②	AVAILABLE	——H——	1.8V (DDR2)	17.55	2.4	2.7	200	1473005-4
TYPE 1	②	AVAILABLE	HOUSING COLOR:GRAY BOSSLESS	2.5V (DDR1)	18.45	1.5	1.8	200	6-1473005-1
TYPE 1	②	AVAILABLE	BOSSLESS	2.5V (DDR1)	18.45	1.5	1.8	200	1-1473005-1
TYPE 1	②	AVAILABLE	——H——	2.5V (DDR1)	18.45	1.5	1.8	200	1473005-1

THIS DRAWING IS A CONTROLLED DOCUMENT.

DIMENSIONS: MM

TOLERANCES UNLESS OTHERWISE SPECIFIED:
0 PLC ±
1 PLC ±
2 PLC ±
3 PLC ±
4 PLC ±
ANGLES ±

MATERIAL

FINISH

DWN	B.WONG	15JUL10
CHK	C.WANG	15JUL10
APVD	S.YAO	15JUL10
PRODUCT SPEC	108-5701	
APPLICATION SPEC		
WEIGHT	4.7g	

TE Connectivity

NAME
DDR1 & DDR2 SODIMM SOCKET
0.6mm PITCH 200POS
STANDARD PROFILE STANDARD TYPE

SIZE	CAGE CODE	DRAWING NO	RESTRICTED TO
A3	00779	C-1473005	—

CUSTOMER DRAWING

SCALE	SHEET	REV
2:1	1 OF 4	J3

THIS DRAWING IS UNPUBLISHED. RELEASED FOR PUBLICATION NOV ,2001.
© COPYRIGHT 2001 By – ALL RIGHTS RESERVED.

LOC	DIST
J	

REVISIONS

P	LTR	DESCRIPTION	DATE	DWN	APVD
	–	SEE SHEET 1	–	–	–

REFERENCE P.C. BOARD PATTERN LAYOUT (CONNECTOR MOUNTING SIDE)

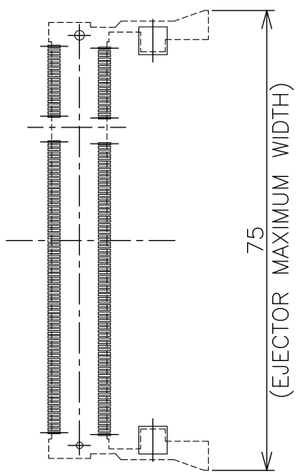

REAL SIZE (SCALE 1:1)

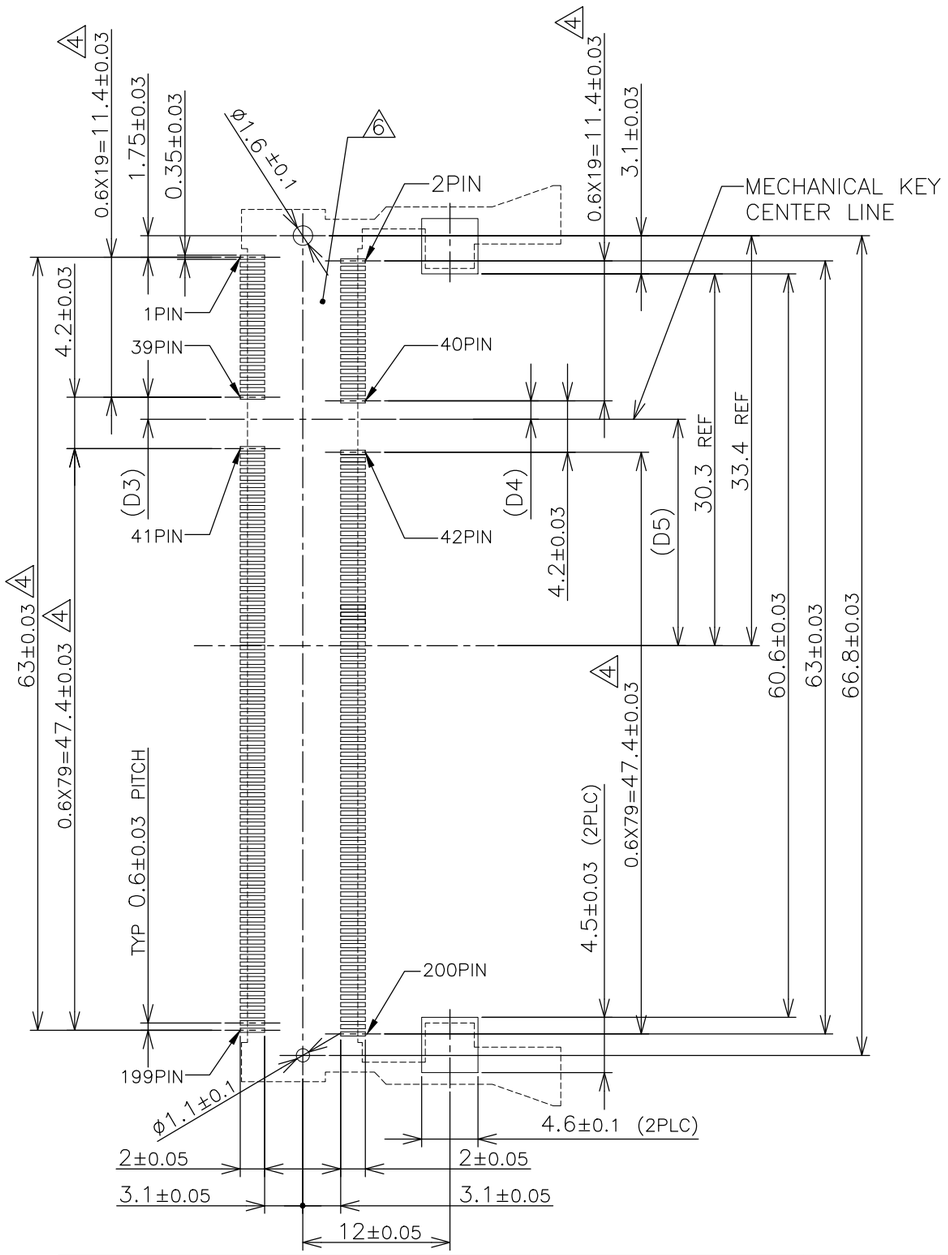

1.8V	17.55	2.4	2.7
2.5V	18.45	1.5	1.8
POWER SUPPLY	D5	D4	D3

THIS DRAWING IS A CONTROLLED DOCUMENT.

DIMENSIONS: MM

TOLERANCES UNLESS OTHERWISE SPECIFIED:
0 PLC ±
1 PLC ±
2 PLC ±
3 PLC ±
4 PLC ±
ANGLES ±

MATERIAL

FINISH

DWN
CHK
APVD
PRODUCT SPEC
APPLICATION SPEC
WEIGHT

TE Connectivity

NAME
DDR1 & DDR2 SODIMM SOCKET
0.6mm PITCH 200POS
STANDARD PROFILE STANDARD TYPE

SIZE	CAGE CODE	DRAWING NO	RESTRICTED TO
A3	00779	C-1473005	–

CUSTOMER DRAWING

SCALE	SHEET	REV
2:1	2 OF 4	J3

THIS DRAWING IS UNPUBLISHED. RELEASED FOR PUBLICATION NOV ,2001.
© COPYRIGHT 2001 By – ALL RIGHTS RESERVED.

LOC	DIST
J	

REVISIONS

P	LTR	DESCRIPTION	DATE	DWN	APVD
	–	SEE SHEET 1	–	–	–

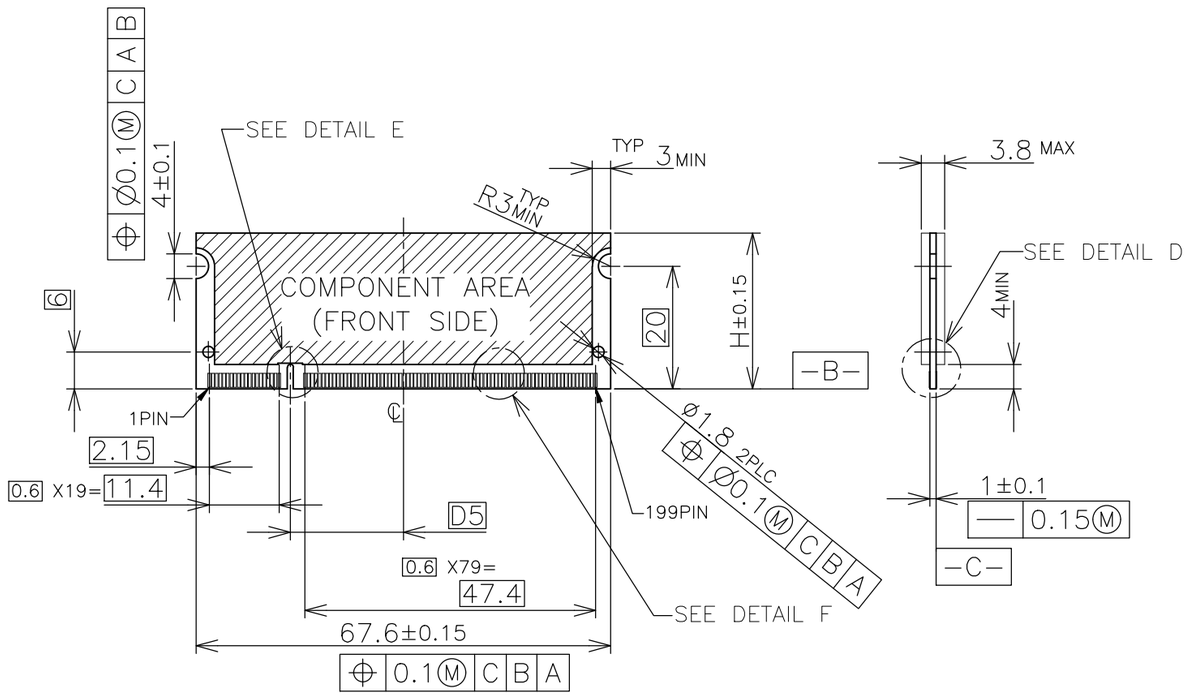

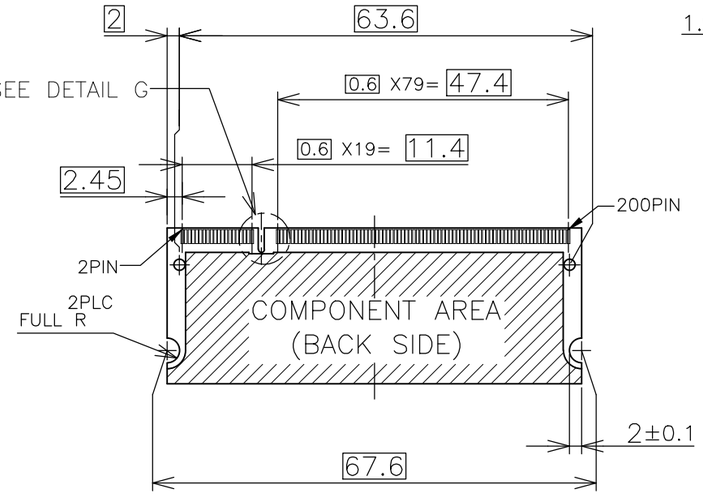

RECOMMENDED MATING P.C.B CONFIGRATION

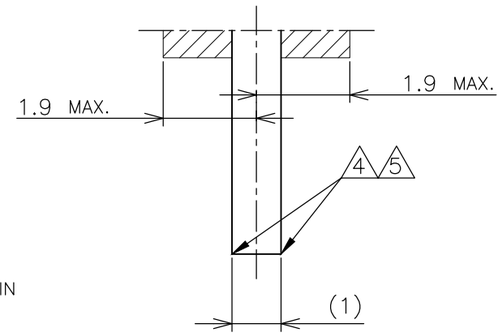

DETAIL D
SCALE 8:1

DETAIL F
SCALE 8:1

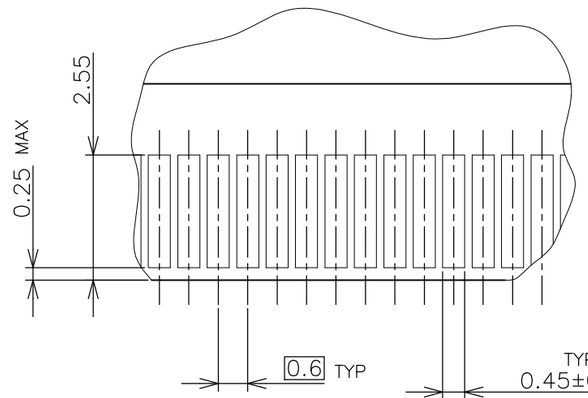

(APPLIED TO SHEET 3)
1. TOLERANCES ON ALL DIMENSIONS ±0.15 UNLESS OTHERWISE SPECIFIED.
2. P.C. BOARD THICKNESS APPLIES ACROSS TABS AND INCLUDES PLATING AND/OR METALIZATION.
3. FINISH OF PAD : GOLD PLATING 0.00076 MIN. OVER Ni PLATING 0.002MIN.

4 NO BURR
5 CHAMFER 0.25 MAX x 45° IF EXIST.

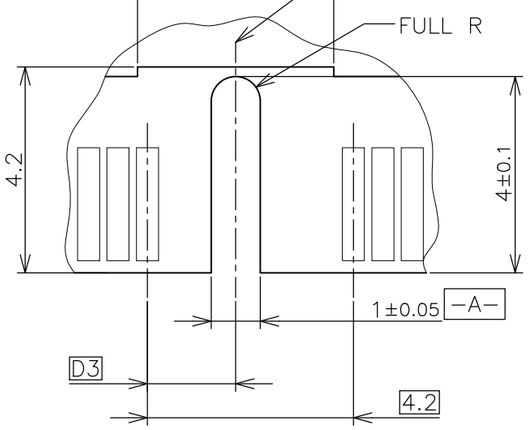

DETAIL E
SCALE 8:1 (FRONT SIDE)

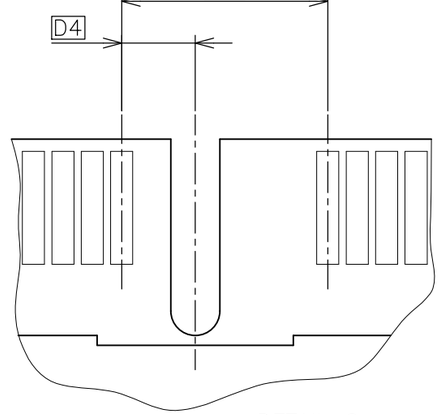

DETAIL G
SCALE 8:1 (BACK SIDE)

31.75	1.8V	17.55	2.4	2.7
25.4	2.5V	18.45	1.5	1.8
H	POWER SUPPLY	D5	D4	D3

THIS DRAWING IS A CONTROLLED DOCUMENT.

DIMENSIONS: MM

TOLERANCES UNLESS OTHERWISE SPECIFIED:
0 PLC ±
1 PLC ±
2 PLC ±
3 PLC ±
4 PLC ±
ANGLES ±

MATERIAL | FINISH

DWN | CHK | APVD | PRODUCT SPEC | APPLICATION SPEC | WEIGHT

TE Connectivity

NAME
DDR1 & DDR2 SODIMM SOCKET
0.6mm PITCH 200POS
STANDARD PROFILE STANDARD TYPE

SIZE	CAGE CODE	DRAWING NO	RESTRICTED TO
A3	00779	C-1473005	–

CUSTOMER DRAWING | SCALE 2:1 | SHEET 3 OF 4 | REV J3

THIS DRAWING IS UNPUBLISHED. RELEASED FOR PUBLICATION NOV ,2001.
© COPYRIGHT 2001 By – ALL RIGHTS RESERVED.

LOC	DIST
J	

REVISIONS

P	LTR	DESCRIPTION	DATE	DWN	APVD
	–	SEE SHEET 1	–	–	–

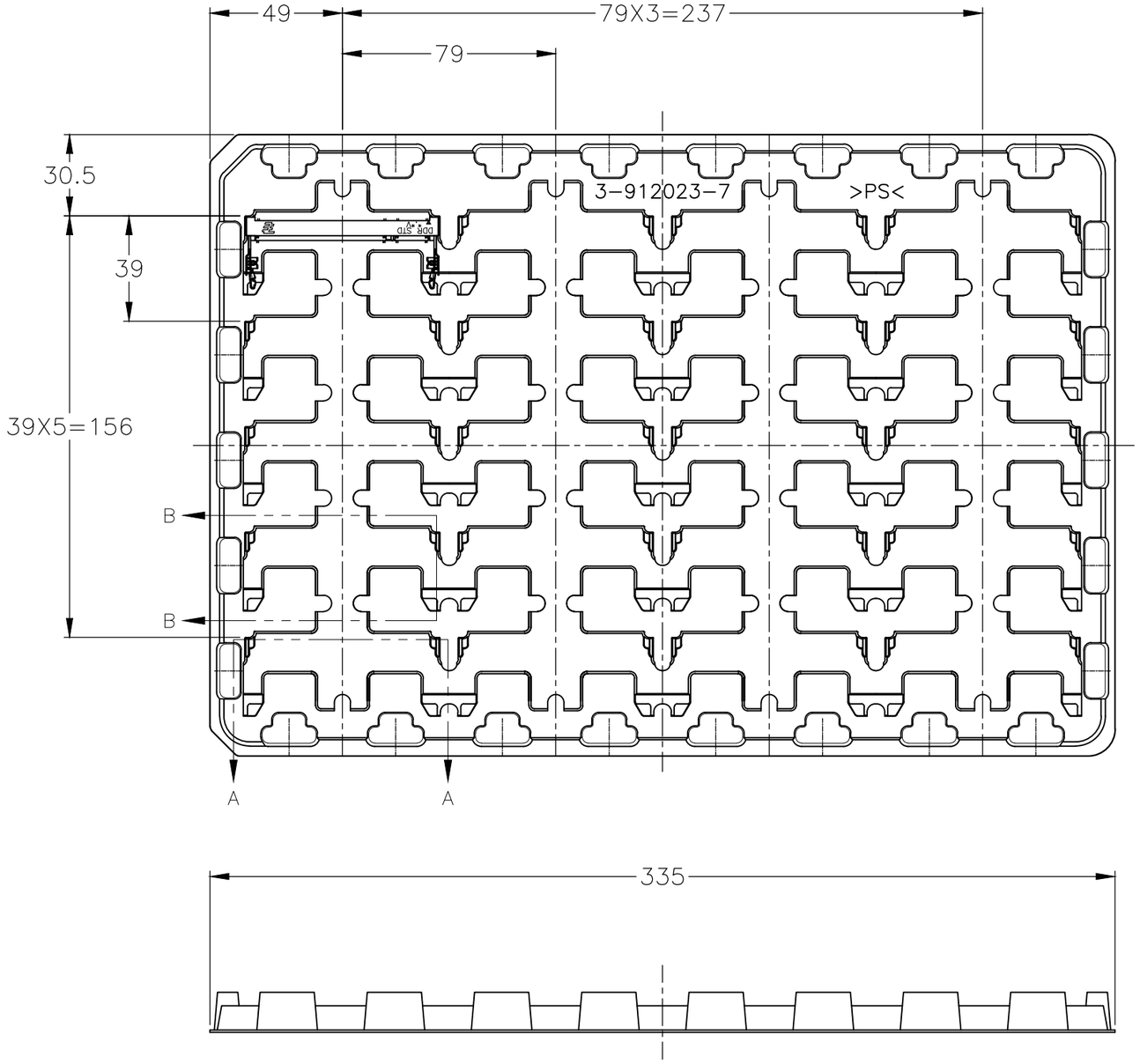

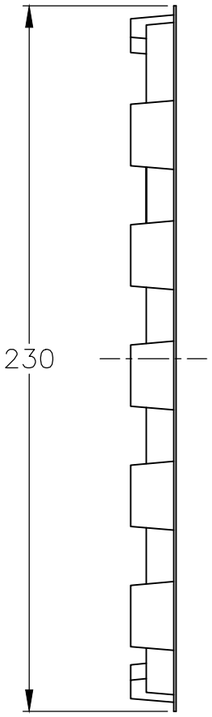

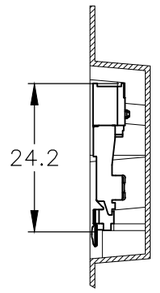

B–B
SCALE 2:1

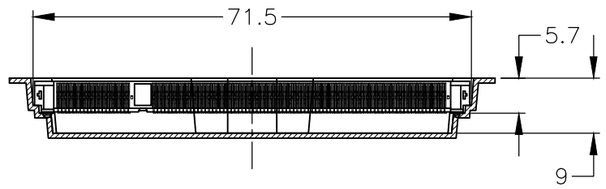

A–A
SCALE 2:1
(180DEG. ROTATE)

2.5V (DDR1)	20EA/TRAY	1473005–5
1.8V (DDR2)	20EA/TRAY	1–1473005–4
1.8V (DDR2)	20EA/TRAY	1473005–4
2.5V (DDR1)	20EA/TRAY	6–1473005–1
2.5V (DDR1)	20EA/TRAY	1–1473005–1
2.5V (DDR1)	20EA/TRAY	1473005–1
POWER SUPPLY (TYPE)	QTY	P/N

(APPLIED TO SHEET 4)
1. THE DIRECTION OF EACH CONNECTOR ON A TRAY IS REFERRED TO THIS DRAWING.
2. GENERAL TOLERANCE: ±0.5

THIS DRAWING IS A CONTROLLED DOCUMENT.

DIMENSIONS: MM

TOLERANCES UNLESS OTHERWISE SPECIFIED:
0 PLC ±
1 PLC ±
2 PLC ±
3 PLC ±
4 PLC ±
ANGLES ±

MATERIAL | FINISH

DWN | CHK | APVD | PRODUCT SPEC | APPLICATION SPEC | WEIGHT

TE Connectivity

NAME
DDR1 & DDR2 SODIMM SOCKET
0.6mm PITCH 200POS
STANDARD PROFILE STANDARD TYPE

SIZE	CAGE CODE	DRAWING NO	RESTRICTED TO
A3	00779	C-1473005	–

CUSTOMER DRAWING | SCALE 1:2 | SHEET 4 OF 4 | REV J3