THIS DRAWING IS UNPUBLISHED. RELEASED FOR PUBLICATION 20
© COPYRIGHT 20 BY TYCO ELECTRONICS CORPORATION. ALL RIGHTS RESERVED.

LOC	DIST
ES	-

REVISIONS

P	LTR	DESCRIPTION	DATE	DWN	APVD
	B	RELEASED PER ECR-07-023182	15OCT2007	A.S	S.Y
	B2	ADDED NEW DASH NUMBER	12NOV2008	TY	SY
	B3	ADDED HALOGEN FREE LOGO	20NOV2008	TY	SY
	B4	REVISE (ECO-19-002267)	21FEB2019	K.G	W.H

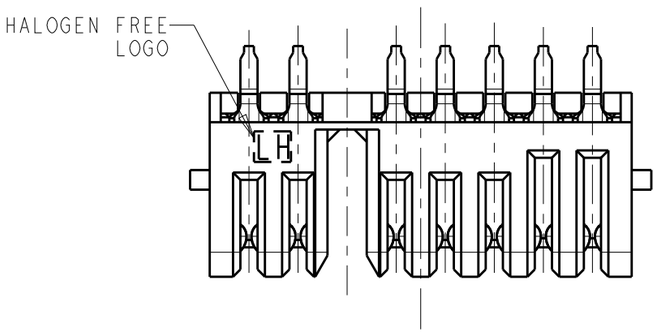

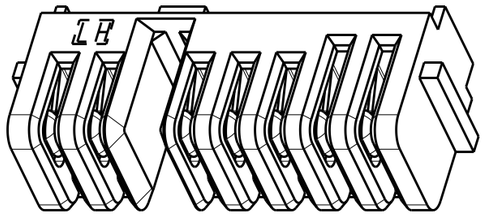

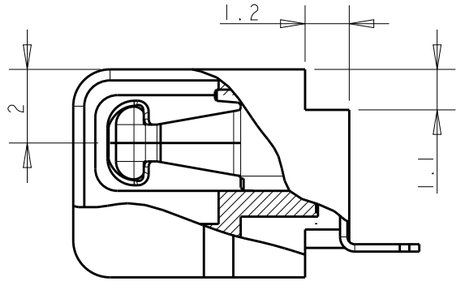

1. MATERIAL
   HOUSING: THERMOPLASTIC RESIN, UL94V-0, BLACK
   CONTACT: COPPER ALLOY
2. FINISH
   CONTACT: NICKEL ALL OVER UNDERPLATING
   GOLD PLATING AT CONTACT AREA
   TIN PLAING AT SOLDER AREA
3. DATE CODE: 7 DIGIT NUMBER.

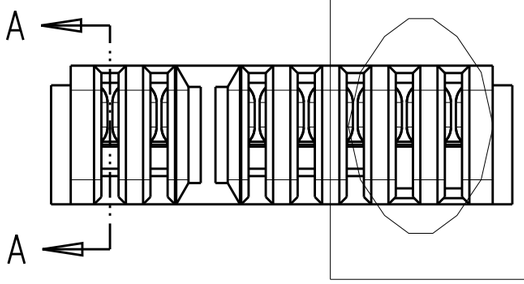

SECTION A - A
SCALE 6:1

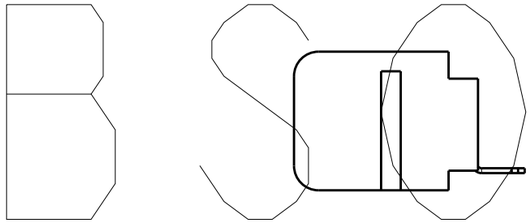

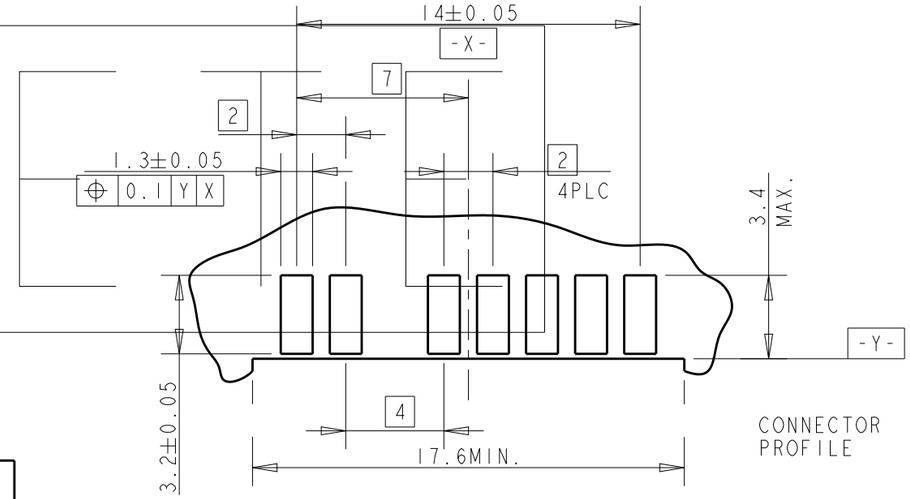

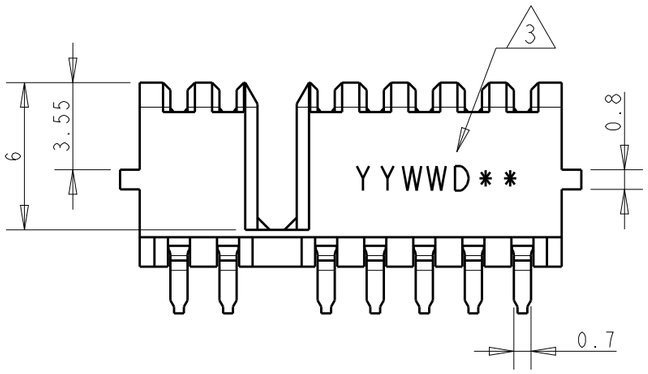

THIS PRINT IS

PRELIMINARY

UNQUALIFIED PRODUCT
CONTACT PRODUCT ENGINEERING
BEFORE USING THIS PRINT

REFERENCE PCB LAYOUT
PCB.THICKNESS 0.8~1.2
(VIEW FROM CONNECTOR MOUNTING SIDE)

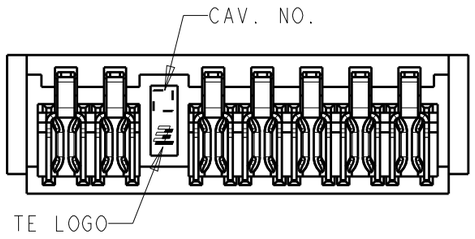

THERMOPLASTIC RESIN(HALOGEN FREE)	1-1932008-1
THERMOPLASTIC RESIN	1932008-1
HOUSING MATERIAL	P/N

THIS DRAWING IS A CONTROLLED DOCUMENT FOR TYCO ELECTRONICS CORPORATION IT IS SUBJECT TO CHANGE AND THE CONTROLLING ENGINEERING ORGANIZATION SHOULD BE CONTACTED FOR THE LATEST REVISION.

DIMENSIONS: mm

TOLERANCES UNLESS OTHERWISE SPECIFIED:

0 PLC	±-
1 PLC	±0.3
2 PLC	±0.3
3 PLC	±0.3
4 PLC	±-
ANGLES	±-

MATERIAL - 1

FINISH - 2

DWN ALEX SHOAL 29APR2007
CHK WENKE HE 29APR2007
APVD STEVEN YAO 29APR2007
PRODUCT SPEC 108-78292
APPLICATION SPEC -
WEIGHT 0.87g

Tyco Electronics
Tyco Electronics Corporation
Shanghai P.R.CHINA 200233

NAME
RECEPTACLE ASSEMBLY
2.0mm PITCH 7POS.
BATTERY CONNECTOR

SIZE	CAGE CODE	DRAWING NO	RESTRICTED TO
A3	00779	C-1932008	

CUSTOMER DRAWING | SCALE 7:1 | SHEET 1 OF 2 | REV B4

THIS DRAWING IS UNPUBLISHED. RELEASED FOR PUBLICATION 20
© COPYRIGHT 20 BY TYCO ELECTRONICS CORPORATION. ALL RIGHTS RESERVED.

LOC	DIST
ES	-

REVISIONS

P	LTR	DESCRIPTION	DATE	DWN	APVD
	-	SEE SHEET 1	-	-	-

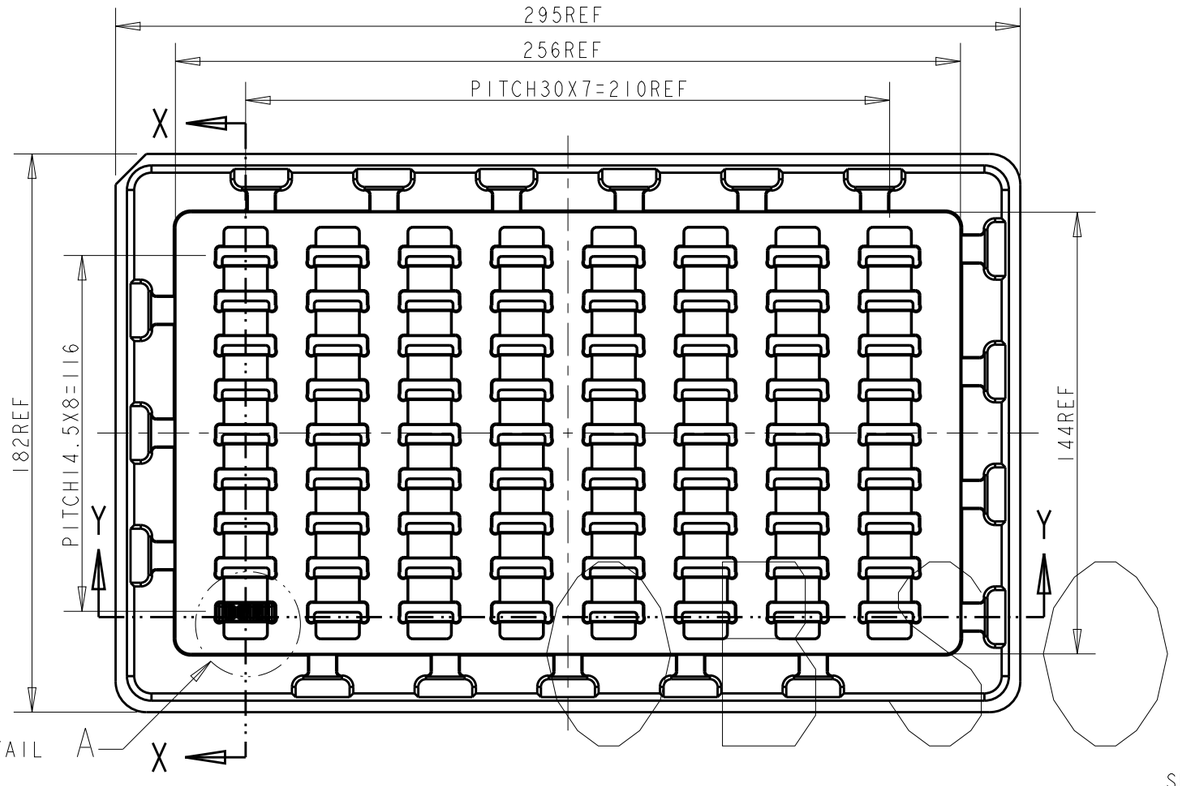

SECTION X - X

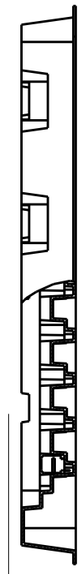

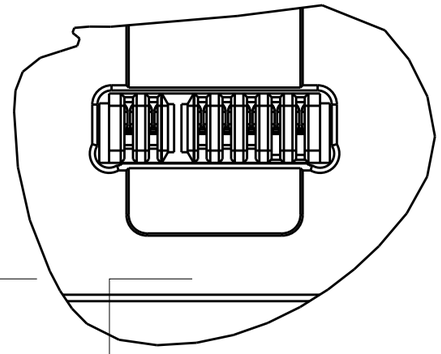

DETAIL A
SCALE 2:1

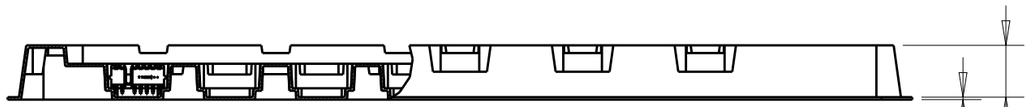

SECTION Y - Y

AS SHOWN: 1932008-1/1-1932008-1
72PCS/TRAY

THIS PRINT IS

PRELIMINARY

UNQUALIFIED PRODUCT
CONTACT PRODUCT ENGINEERING
BEFORE USING THIS PRINT

THIS DRAWING IS A CONTROLLED DOCUMENT FOR TYCO ELECTRONICS CORPORATION IT IS SUBJECT TO CHANGE AND THE CONTROLLING ENGINEERING ORGANIZATION SHOULD BE CONTACTED FOR THE LATEST REVISION.

DIMENSIONS: mm

TOLERANCES UNLESS OTHERWISE SPECIFIED:

0 PLC	±-
1 PLC	±0.3
2 PLC	±0.3
3 PLC	±0.3
4 PLC	±-
ANGLES	±-

MATERIAL -

FINISH -

DWN	29APR2007 ALEX SHOAL
CHK	29APR2007 WENKE HE
APVD	29APR2007 STEVEN YAO
PRODUCT SPEC	108-78292
APPLICATION SPEC	-
WEIGHT	0.87g

Tyco Electronics

Tyco Electronics Corporation
Shanghai P.R.CHINA 200233

NAME
RECEPTACLE ASSEMBLY
2.0mm PITCH 7POS.
BATTERY CONNECTOR

SIZE	CAGE CODE	DRAWING NO	RESTRICTED TO
A3	00779	C-1932008	

CUSTOMER DRAWING | SCALE 7:1 | SHEET 2 OF 2 | REV B4