THIS DRAWING IS UNPUBLISHED. RELEASED FOR PUBLICATION 20
© COPYRIGHT 20 BY - ALL RIGHTS RESERVED.

3 POS PRODUCT AS SHOWN

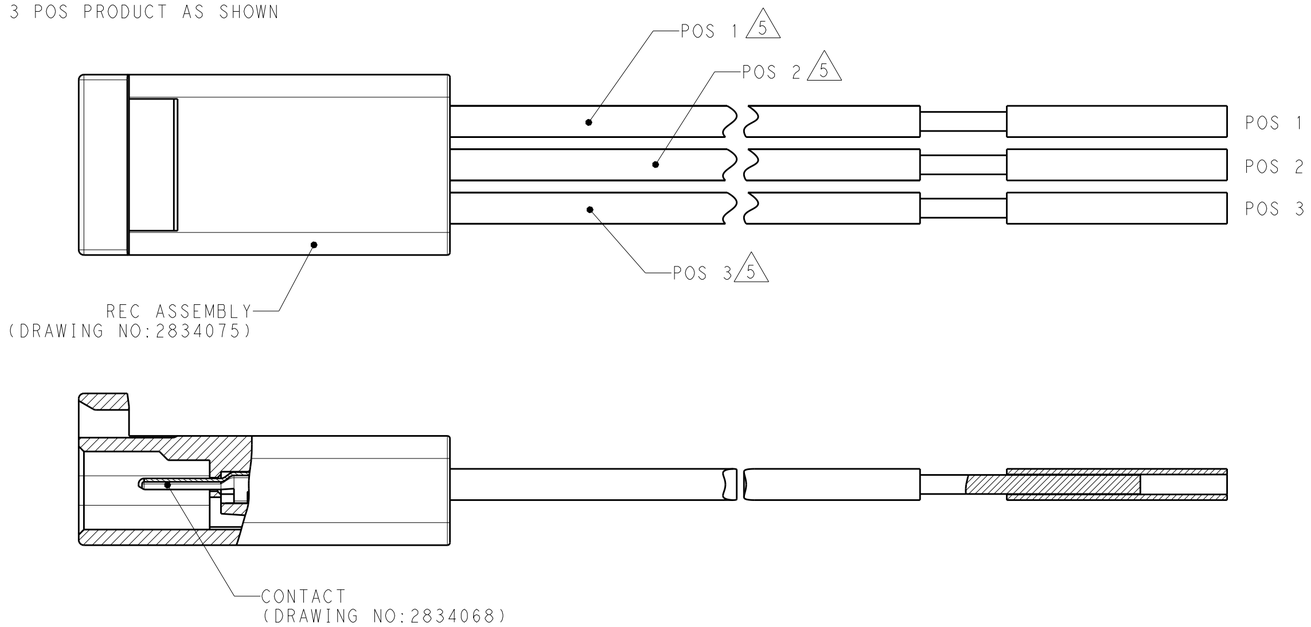


2 POS PRODUCT AS SHOWN

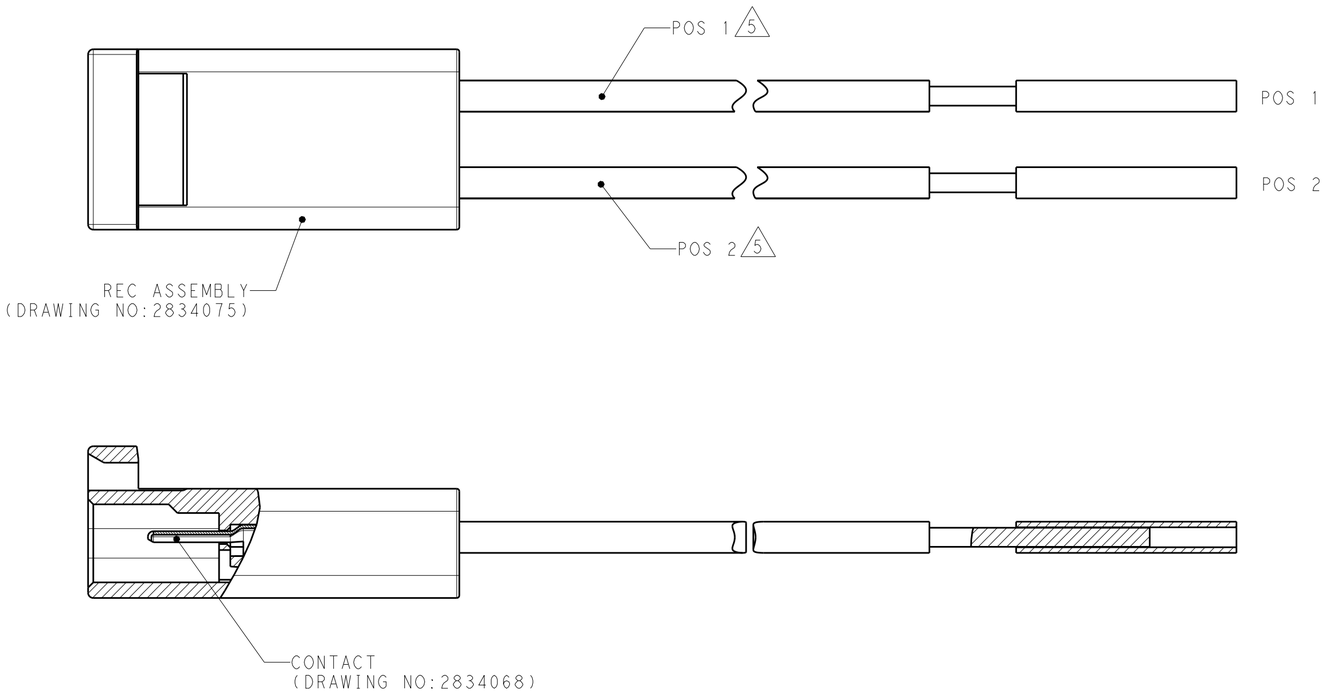


| REVISIONS | | | | | |
|---|---|---|---|---|---|
| P | LTR | DESCRIPTION | DATE | DWN | APVD |
| | A | PRELIMINARY RELEASE | 18JAN2016 | W.Z | X.X |
| | B | ECR-17-017177 | 22NOV2017 | W.Z | S.M |
| | | | | | |
| | | | | | |

1. MATERIAL:
   CONTACT: COPPER ALLOY.
   HOUSING: THERMOPLASTIC,UL94-V0.
2. FINISH:
   GOLD FLASH PLATING ON CONTACT MATING AREA.TIN PLATING ON CRIMP AREA AND ALL NICKLE UNDERPLATED.
3. FINISH:
   ALL TIN PLATING OVER NICKLE UNDSERPLATING.
4. WIRE SPEC: 18AWG, 41 STRAND, UL 1061 STYLE.
   20AWG, 26 STRAND, UL 1007 STYLE.
   22AWG, 17 STRAND, UL 1007 STYLE.
5. WIRE COLOR DEFINITION (SEE NEXT PAGE WIRE COLOR CHART).
6. PART NUMBER LIST: SEE TABLE ON NEXT PAGE.
7. WIRE SPEC: 22AWG,UL WET RATED WIRE,CHAMPLAIN 3680.
8. PACKAGING SPECIFICATION: 107-137327.

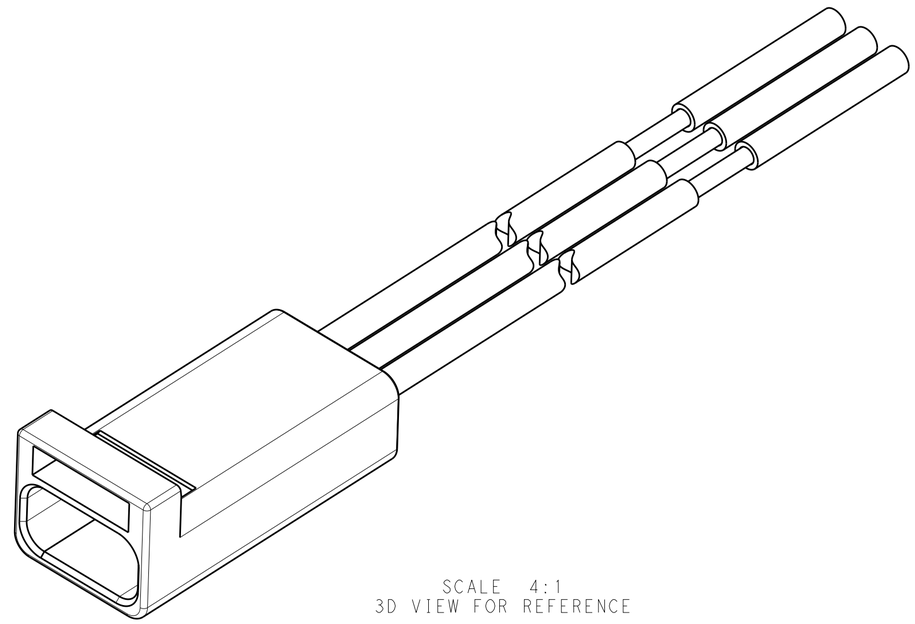

SCALE 4:1
3D VIEW FOR REFERENCE

THIS DRAWING IS A CONTROLLED DOCUMENT.

DIMENSIONS: mm

TOLERANCES UNLESS OTHERWISE SPECIFIED:

| | |
|---|---|
| 0 PLC | ±0.5 |
| 1 PLC | ±0.5 |
| 2 PLC | ±0.5 |
| 3 PLC | ±0.5 |
| 4 PLC | ±0.5 |
| ANGLES | ±. |

MATERIAL 1
FINISH 2

DWN ZHANG WEI 22NOV2017
CHK FU XIAOZHI 22NOV2017
APVD SHI MING 22NOV2017
PRODUCT SPEC 108-137093
APPLICATION SPEC 114-137093
WEIGHT -

TE Connectivity

NAME REC CABLE ASSEMBLY
MINIATURE WATERPROOF CONNECTOR
-

| SIZE | CAGE CODE | DRAWING NO | RESTRICTED TO |
|---|---|---|---|
| A2 | - | C-2834183 | - |

CUSTOMER DRAWING | SCALE 1:1 | SHEET 1 OF 3 | REV B

THIS DRAWING IS UNPUBLISHED. RELEASED FOR PUBLICATION 20
© COPYRIGHT 20 BY - ALL RIGHTS RESERVED.

| REVISIONS | | | | | |
|---|---|---|---|---|---|
| P | LTR | DESCRIPTION | DATE | DWN | APVD |
| | | SEE SHEET 1 | | | |

1 POS PRODUCT AS SHOWN

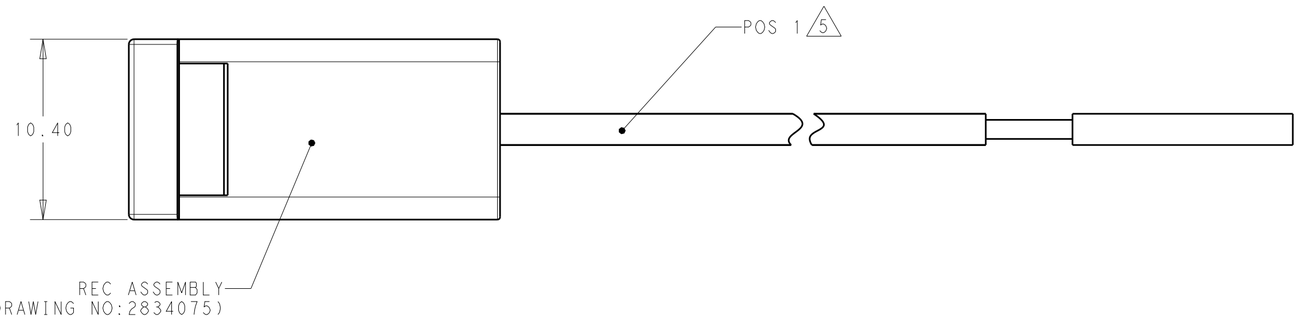


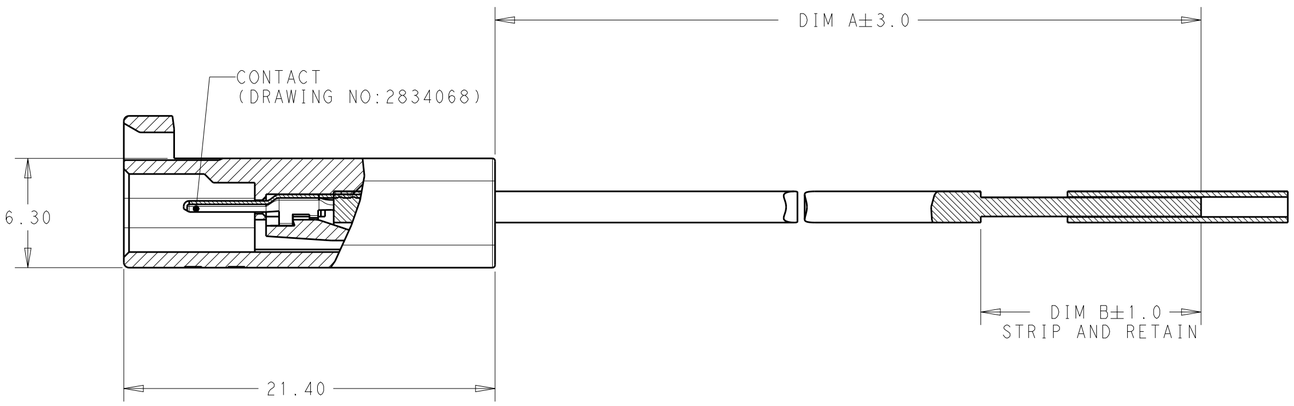


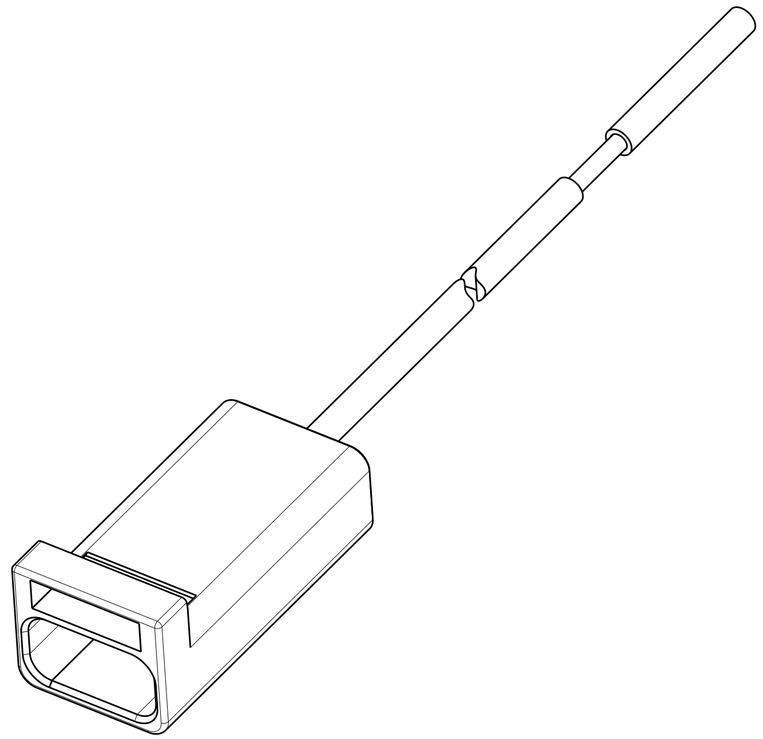

SCALE 4:1
3D VIEW FOR REFERENCE

THIS DRAWING IS A CONTROLLED DOCUMENT.

DIMENSIONS: mm

TOLERANCES UNLESS OTHERWISE SPECIFIED:

| | |
|---|---|
| 0 PLC | ±0.5 |
| 1 PLC | ±0.5 |
| 2 PLC | ±0.5 |
| 3 PLC | ±0.5 |
| 4 PLC | ±0.5 |
| ANGLES | ±- |

MATERIAL 1

FINISH 2

| | |
|---|---|
| DWN | ZHANG WEI 22NOV2017 |
| CHK | FU XIAOZHI 22NOV2017 |
| APVD | SHI MING 22NOV2017 |
| PRODUCT SPEC | 108-137093 |
| APPLICATION SPEC | 114-137093 |
| WEIGHT | - |

TE Connectivity

NAME
REC CABLE ASSEMBLY
MINIATURE WATERPROOF CONNECTOR
-

| SIZE | CAGE CODE | DRAWING NO | RESTRICTED TO |
|---|---|---|---|
| A2 | - | C-2834183 | - |

CUSTOMER DRAWING | SCALE 1:1 | SHEET 2 OF 3 | REV B

THIS DRAWING IS UNPUBLISHED. RELEASED FOR PUBLICATION 20
© COPYRIGHT 20 BY - ALL RIGHTS RESERVED.

| REVISIONS | | | | | |
|---|---|---|---|---|---|
| P | LTR | DESCRIPTION | DATE | DWN | APVD |
| | | SEE SHEET 1 | | | |

## 6 PART NUMBER LIST:

| | | | | | | | |
|---|---|---|---|---|---|---|---|
| 3 | 12.7 | 203.2 | 4 | 18 AWG | WHITE | 1 | 7-2834183-2 |
| 3 | 9.5 | 1041.4 | 7 | 22 AWG | BLACK | 2 | 6-2834183-5 |
| 3 | 9.5 | 889 | 7 | 22 AWG | BLACK | 2 | 6-2834183-4 |
| 3 | 9.5 | 736.6 | 7 | 22 AWG | BLACK | 2 | 6-2834183-3 |
| 3 | 9.5 | 609.6 | 7 | 22 AWG | BLACK | 2 | 6-2834183-2 |
| 3 | 9.5 | 457.2 | 7 | 22 AWG | BLACK | 2 | 6-2834183-1 |
| 3 | 12.7 | 300 | 4 | 22 AWG | WHITE | 2 | 5-2834183-6 |
| 3 | 12.7 | 200 | 4 | 22 AWG | WHITE | 2 | 5-2834183-5 |
| 3 | 12.7 | 100 | 4 | 22 AWG | WHITE | 2 | 5-2834183-4 |
| 3 | 12.7 | 300 | 4 | 22 AWG | WHITE | 3 | 5-2834183-3 |
| 3 | 12.7 | 200 | 4 | 22 AWG | WHITE | 3 | 5-2834183-2 |
| 3 | 12.7 | 100 | 4 | 22 AWG | WHITE | 3 | 5-2834183-1 |
| 2 | 12.7 | 300 | 4 | 22 AWG | WHITE | 2 | 4-2834183-6 |
| 2 | 12.7 | 200 | 4 | 22 AWG | WHITE | 2 | 4-2834183-5 |
| 2 | 12.7 | 100 | 4 | 22 AWG | WHITE | 2 | 4-2834183-4 |
| 2 | 12.7 | 300 | 4 | 22 AWG | WHITE | 3 | 4-2834183-3 |
| 2 | 12.7 | 200 | 4 | 22 AWG | WHITE | 3 | 4-2834183-2 |
| 2 | 12.7 | 100 | 4 | 22 AWG | WHITE | 3 | 4-2834183-1 |
| 3 | 12.7 | 76.2 | 4 | 20 AWG | WHITE | 2 | 3-2834183-7 |
| 3 | 12.7 | 300 | 4 | 20 AWG | WHITE | 2 | 3-2834183-6 |
| 3 | 12.7 | 200 | 4 | 20 AWG | WHITE | 2 | 3-2834183-5 |
| 3 | 12.7 | 100 | 4 | 20 AWG | WHITE | 2 | 3-2834183-4 |
| 3 | 12.7 | 300 | 4 | 20 AWG | WHITE | 3 | 3-2834183-3 |
| 3 | 12.7 | 200 | 4 | 20 AWG | WHITE | 3 | 3-2834183-2 |
| 3 | 12.7 | 100 | 4 | 20 AWG | WHITE | 3 | 3-2834183-1 |
| 2 | 12.7 | 76.2 | 4 | 20 AWG | WHITE | 2 | 2-2834183-7 |
| 2 | 12.7 | 300 | 4 | 20 AWG | WHITE | 2 | 2-2834183-6 |
| 2 | 12.7 | 200 | 4 | 20 AWG | WHITE | 2 | 2-2834183-5 |
| 2 | 12.7 | 100 | 4 | 20 AWG | WHITE | 2 | 2-2834183-4 |
| 2 | 12.7 | 300 | 4 | 20 AWG | WHITE | 3 | 2-2834183-3 |
| 2 | 12.7 | 200 | 4 | 20 AWG | WHITE | 3 | 2-2834183-2 |
| 2 | 12.7 | 100 | 4 | 20 AWG | WHITE | 3 | 2-2834183-1 |
| 3 | 12.7 | 300 | 4 | 18 AWG | WHITE | 2 | 1-2834183-6 |
| 3 | 12.7 | 200 | 4 | 18 AWG | WHITE | 2 | 1-2834183-5 |
| 3 | 12.7 | 100 | 4 | 18 AWG | WHITE | 2 | 1-2834183-4 |
| 3 | 12.7 | 300 | 4 | 18 AWG | WHITE | 3 | 1-2834183-3 |
| 3 | 12.7 | 200 | 4 | 18 AWG | WHITE | 3 | 1-2834183-2 |
| 3 | 12.7 | 100 | 4 | 18 AWG | WHITE | 3 | 1-2834183-1 |
| 2 | 12.7 | 300 | 4 | 18 AWG | WHITE | 2 | 2834183-6 |
| 2 | 12.7 | 200 | 4 | 18 AWG | WHITE | 2 | 2834183-5 |
| 2 | 12.7 | 100 | 4 | 18 AWG | WHITE | 2 | 2834183-4 |
| 2 | 12.7 | 300 | 4 | 18 AWG | WHITE | 3 | 2834183-3 |
| 2 | 12.7 | 200 | 4 | 18 AWG | WHITE | 3 | 2834183-2 |
| 2 | 12.7 | 100 | 4 | 18 AWG | WHITE | 3 | 2834183-1 |
| FINISH | DIM B | DIM A | WIRE SPEC | WIRE RANGE | HSG COLOR | POS NO | PART NO |

## 5 WIRE COLOR CHART

| | | | | | | | | | | | | |
|---|---|---|---|---|---|---|---|---|---|---|---|---|
| 3 | WHITE | WHITE | WHITE | - | - | - | WHITE | WHITE | WHITE | - | - | - |
| 2 | RED | RED | RED | BLACK | BLACK | BLACK | RED | RED | RED | BLACK | BLACK | BLACK |
| 1 | BLACK | BLACK | BLACK | RED | RED | RED | BLACK | BLACK | BLACK | RED | RED | RED |
| POS | *-1 | *-2 | *-3 | *-4 | *-5 | *-6 | 1-*-1 | 1-*-2 | 1-*-3 | 1-*-4 | 1-*-5 | 1-*-6 |

| | | | | | | | | | | | | | | |
|---|---|---|---|---|---|---|---|---|---|---|---|---|---|---|
| 3 | WHITE | WHITE | WHITE | - | - | - | - | WHITE | WHITE | WHITE | - | - | - | - |
| 2 | RED | RED | RED | BLACK | BLACK | BLACK | RED | RED | RED | RED | BLACK | BLACK | BLACK | RED |
| 1 | BLACK | BLACK | BLACK | RED | RED | RED | BLUE | BLACK | BLACK | BLACK | RED | RED | RED | BLUE |
| POS | 2-*-1 | 2-*-2 | 2-*-3 | 2-*-4 | 2-*-5 | 2-*-6 | 2-*-7 | 3-*-1 | 3-*-2 | 3-*-3 | 3-*-4 | 3-*-5 | 3-*-6 | 3-*-7 |

| | | | | | | | | | | | | |
|---|---|---|---|---|---|---|---|---|---|---|---|---|
| 3 | WHITE | WHITE | WHITE | - | - | - | WHITE | WHITE | WHITE | - | - | - |
| 2 | RED | RED | RED | BLACK | BLACK | BLACK | RED | RED | RED | BLACK | BLACK | BLACK |
| 1 | BLACK | BLACK | BLACK | RED | RED | RED | BLACK | BLACK | BLACK | RED | RED | RED |
| POS | 4-*-1 | 4-*-2 | 4-*-3 | 4-*-4 | 4-*-5 | 4-*-6 | 5-*-1 | 5-*-2 | 5-*-3 | 5-*-4 | 5-*-5 | 5-*-6 |

| | | | | | | |
|---|---|---|---|---|---|---|
| 3 | - | - | - | - | - | - |
| 2 | BLACK | BLACK | BLACK | BLACK | BLACK | - |
| 1 | RED | RED | RED | RED | RED | WHITE |
| POS | 6-*-1 | 6-*-2 | 6-*-3 | 6-*-4 | 6-*-5 | 7-*-2 |

THIS DRAWING IS A CONTROLLED DOCUMENT.

DIMENSIONS: mm

TOLERANCES UNLESS OTHERWISE SPECIFIED:
0 PLC ±0.5
1 PLC ±0.5
2 PLC ±0.5
3 PLC ±0.5
4 PLC ±0.5
ANGLES ±-

MATERIAL

FINISH

DWN ZHANG WEI 22NOV2017
CHK FU XIAOZH 22NOV2017
APVD SHI MING 22NOV2017
PRODUCT SPEC -
APPLICATION SPEC -
WEIGHT -

CUSTOMER DRAWING

TE Connectivity

NAME REC CABLE ASSEMBLY MINIATURE WATERPROOF CONNECTOR -

| SIZE | CAGE CODE | DRAWING NO | RESTRICTED TO |
|---|---|---|---|
| A2 | - | C-2834183 | - |

SCALE 1:1 SHEET 3 OF 3 REV B