Special Connectors
Button Battery Holder

Material and Finish :
Housing — Thermoplastic
614 : Black
616 : Natural (White)
Contact — Stainless steel with palladium nickel and gold plating over nickel underneath

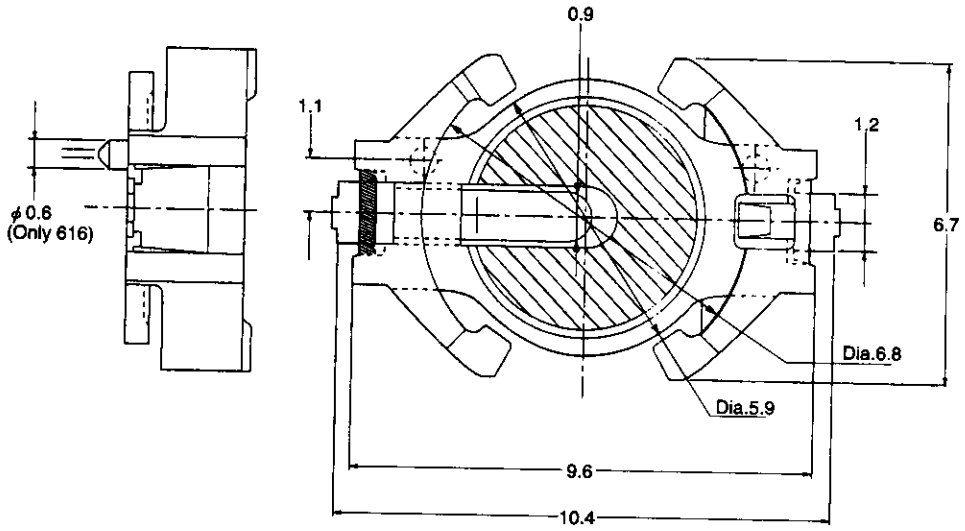

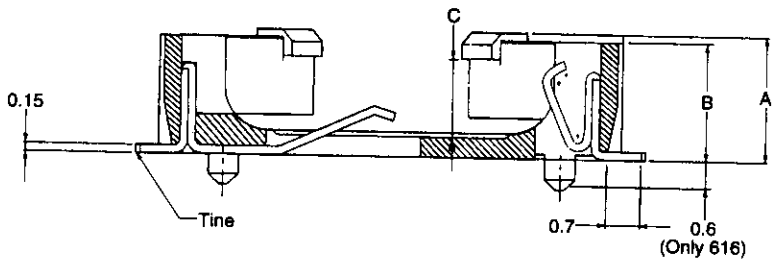

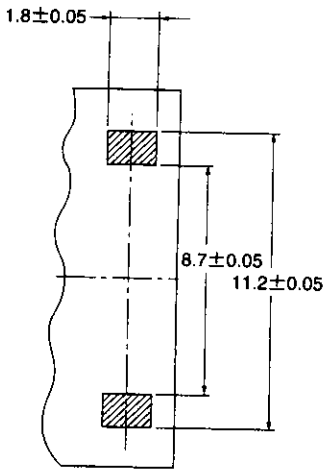

PC Board Layout

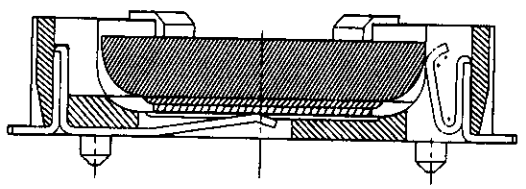

The Batteries Applied

Type	Dimensions			No. of Pos.	Emboss Tape Mounted (EA./Reel)
	A	B	C		
ML 616	2.55	2.4	1.65	**353832-1**	1,500
ML 614	2.3	2.2	1.45	**1318164-1**	1,500
ML 612	2.55	2.4	1.25	**1318679-1**	1,500
ML 612 L/P	2.2	2.0	1.25	**1376154-1**	1,500