Accessories Miniature Relay PT

- **Easy replacement of relays on a densely packed DIN rail**
- **No reduction of protection class or creepage/clearance with plastic retainer**
- **Plug-in indicator- and protection modules**
- **Retainer clip with ejection function for relays of 29 mm height**
- **DIN-rail sockets and accessories: RoHS compliant (Directive 2002/95/EC)**



Premium socket with screwless terminals for DIN rail mounting

PT 78 74P Premium socket, logical terminal arrangement, 4 pole
PT 78 72P Premium socket, logical terminal arrangement, 2 pole

- **PT 2/4 pole 6/12 A**
- **Screwless Clamps**
- **Mounting of solid wires without tool**
- **Double Clamps per terminal**
- **Jumper links for interconnection**
- **Open coil circuit for active modules**
- **Logical terminal arrangement**



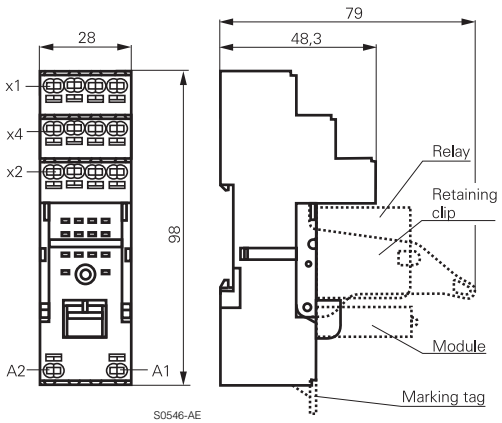

Approvals

VDE REG.-Nr. 115719, cULus E135149

Technical data	2-pole	4-pole
Rated voltage / max. switching voltage AC	240 / 400 VAC	240 VAC
Rated current	12 A	6 A
Limiting continuous current	see derating curve	
Dielectric strength coil-contact circuit	2500 V_{rms}	2500 V_{rms}
open contact circuit	1200 V_{rms}	1200 V_{rms}
adjacent contact circuits	2500 V_{rms}	2000 V_{rms}
Clearance / creepage coil-contact circuit	≥ 4/4 mm	≥ 4/4 mm
adjacent contact circuits	≥ 3.5/9.5 mm	≥1.8/3.5 mm
Material group of insulation parts	IIIa	
Insulation to IEC 60664-1		
Type of insulation coil-contact circuit	basic	
open contact circuit	functional	
adjacent contact circuits	basic	
Rated insulation voltage	250 V	
Pollution degree	2[1)]	
Rated voltage system	230 / 400 V	
Overvoltage category	III	

Derating curve PT787.P

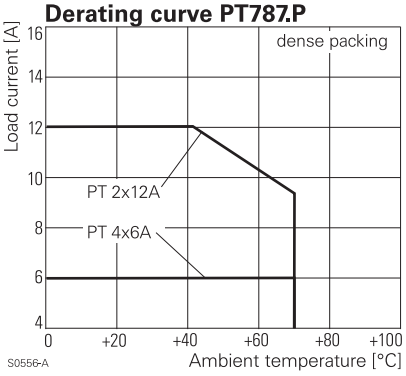

[1)] with inserted relay pollution degree 1 in region of contact pins / socket inlets.

Datasheet 2010/11 Rev. JK1
www.tycoelectronics.com
www.schrackrelays.com
© 2010 Tyco Electronics Ltd.

Datasheets and product specification acc. IEC 61810-1 and to be used only together with the 'Definitions' section.

Datasheets and product data is subject to the terms of the disclaimer and all chapters of the 'Definitions' section, available at http://relays.tycoelectronics.com/definitions

Datasheets, product data, 'Definitions' section, application notes and all specifications are subject to change.

Accessories Miniature Relay PT (Continued)

Technical data (Continued)	**2-pole**	**4-pole**
RoHS - Directive 2002/95/EC	compliant	
Ambient temperature range		
for mounting/handling	-25...+70°C	
in operation	-40...+70°C	
Terminals	screwless	
Wire strip length	12 mm	
Wire cross section		
solid wire	1 x 0.75/1/1.5 mm²	
	2 x 0.75/1 mm²	
with standard isolation (no oversize isolation)	2 x 1.5 mm²	
stranded wire		
without bootlace crimp	1 x 0.75/1/1.5 mm²	
	2 x 0.75/1 mm²	
without bootlace crimp with standard isolation	2 x 1.5 mm²	
with bootlace crimp	1 x 0.75/1 mm²	
	2 x 0.75 mm²	
with bootlace crimp without isolation or min 18 mm long	1 x 1.5 mm²	

For stranded wires with braids 0.05 mm or smaller the use of bootlace crimps is recommended.
When using stranded wires without bootlace crimp the clamp must be opened during insertion.

Insertion cycles	A (10)	
Max. Insertion Force total	100 N	
Mounting distance	≥ 0, dense packing	
Weight	44 g	60 g
Packaging unit	10 pcs	

Socket with screwless terminals for DIN rail mounting

Type		Part Number
PT 7872P	Premium socket, logical terminal arrangement Socket with screwless terminals 2 pole	1860100-1
PT 7874P	Premium socket, logical terminal arrangement Socket with screwless terminals 4 pole	1860000-1

Accessories for PT 78 72P, PT 78 74P

Type		Part Number
PT 17 021	Plastic retaining clip, relay height 29 mm	2-1415526-1
PT 28 800	Metal retaining clip PT, relay height 29 mm	5-1419111-9
PT 17 040	Marking tag	6-1415037-1
PT 17 0P1	Jumper link, max load 12 A	1860214-1

How to use, Precautions

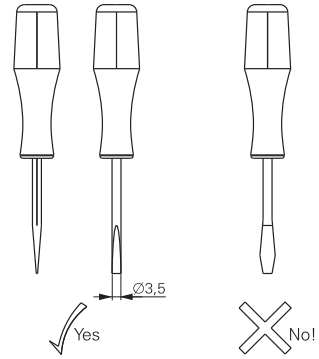

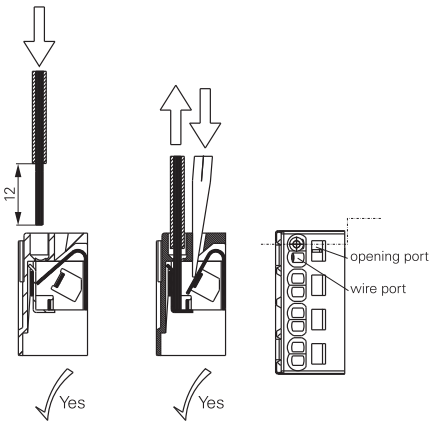

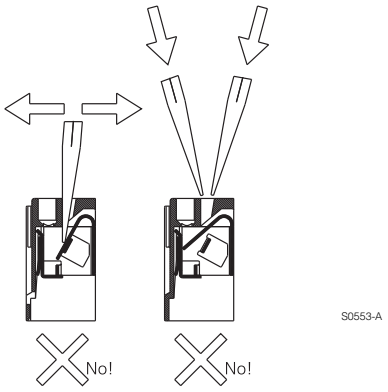

Jumper link

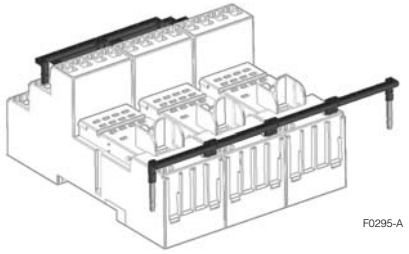

When connecting more than 2 poles with staggered jumper bars the lower bars need to be stripped and shortened to an appropriate length to enable correct fitting.

Datasheet 2010/11 Rev. JK1
www.tycoelectronics.com
www.schrackrelays.com
© 2010 Tyco Electronics Ltd.

Datasheets and product specification acc. IEC 61810-1 and to be used only together with the 'Definitions' section.

Datasheets and product data is subject to the terms of the disclaimer and all chapters of the 'Definitions' section, available at http://relays.tycoelectronics.com/definitions

Datasheets, product data, 'Definitions' section, application notes and all specifications are subject to change.

Accessories Miniature Relay PT (Continued)

PT DIN-rail socket with screw type terminals PT 78 722 / PT 78 742

- **Socket with logical arrangement of control/load terminals**
- **High quality rising clamp terminals**
- **Captive combination terminal screws**
- **Second A2 for easier looping**
- **Jumper bars for interconnection**



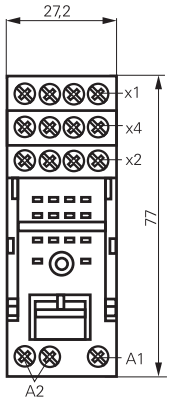

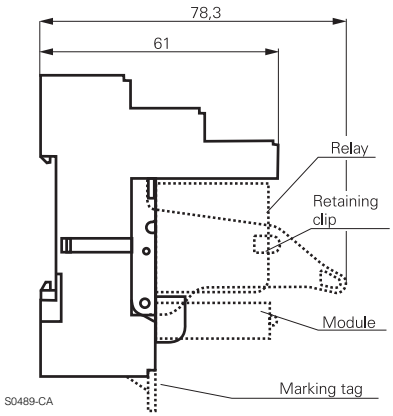

Approvals

VDE REG.-Nr. 115719, cULus E135149

Technical data	2-pole	4-pole
Rated voltage / max. switching voltage AC	240 / 400 VAC	240 VAC
Rated current	12 A	6 A
Limiting continuous current	see derating curve	
Dielectric strength coil-contact circuit	2500 V_{rms}	2500 V_{rms}
open contact circuit	1200 V_{rms}	1200 V_{rms}
adjacent contact circuits	2500 V_{rms}	2000 V_{rms}
Clearance / creepage coil-contact circuit	≥ 4 / 4 mm	≥ 4 / 4 mm
adjacent contact circuits	≥ 3.5 / 9.5 mm	≥1.8 / 3.5 mm
Material group of insulation parts	IIIa	
Insulation to IEC 60664-1		
Type of insulation coil-contact circuit	basic	
open contact circuit	functional	
adjacent contact circuits	basic	
Rated insulation voltage	250 V	
Pollution degree	2[1)]	
Rated voltage system	230 / 400 V	
Overvoltage category	III	
RoHS - Directive 2002/95/EC	compliant	
Ambient temperature range	-40...+70°C	
Terminals	screw	
Terminal screw torque acc. IEC 61984	0.5 Nm	
max.	0.7 Nm	
Wire cross section		
single wire	2 x 2.5 mm^2	
fine wire	2 x 2.5 mm^2	
with bootlace crimp (DIN 46228/1)	2 x 1.5 mm^2	
Insertion cycles	A (10)	
Max. Insertion Force total	100 N	
Mounting distance	≥ 0, dense packing	
Weight	44 g	60 g
Packaging unit	10 pcs	

Derating curve

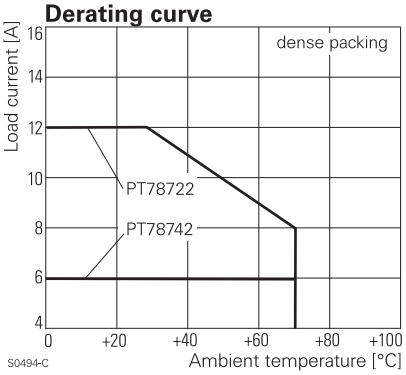

[1)] with inserted relay pollution degree 1 in region of contact pins / socket inlets.

Datasheet 2010/11 Rev. JK1
www.tycoelectronics.com
www.schrackrelays.com
© 2010 Tyco Electronics Ltd.

Datasheets and product specification acc. IEC 61810-1 and to be used only together with the 'Definitions' section.

Datasheets and product data is subject to the terms of the disclaimer and all chapters of the 'Definitions' section, available at http://relays.tycoelectronics.com/definitions

Datasheets, product data, 'Definitions' section, application notes and all specifications are subject to change.

Accessories Miniature Relay PT (Continued)

DIN-rail socket with screw type terminals, In/Out arrangement

Type		Part Number
PT 78 722	DIN-rail socket with screw type terminals, In/Out arrangement 2 pole	1415526-1
PT 78 742	DIN-rail socket with screw type terminals, In/Out arrangement 4 pole	1-1415526-1

Jumper bar

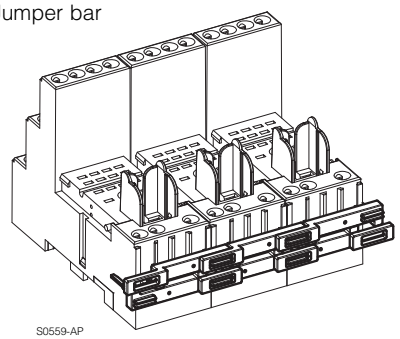

Accessories for PT 78 722, PT 78 742

Type		Part Number
PT 17 021	Plastic retaining clip, relay height 29 mm	2-1415526-1
PT 28 800	Metal retaining clip PT, relay height 29 mm	5-1419111-9
PT 17 040	Marking tag	6-1415037-1
PT 17 0R6	Jumper bar, max load 12 A for connection of up to 6 PT sockets	1860517-5

PT DIN-rail socket with screw type terminals PT 78 720/730/740/741



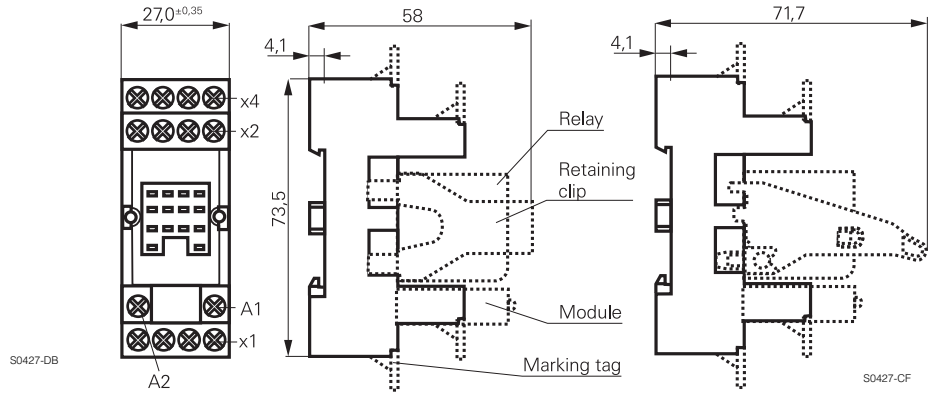

Approvals

VDE REG.-Nr. 115719, cULus E135149

Technical data	2-pole	3-pole	4-pole
Rated voltage / max. switching voltage AC		240 / 400 VAC	
Rated current	12 A	10 A	6 A
Limiting continuous current		see derating curve	
Dielectric strength coil-contact circuit	2500 V_{rms}	2500 V_{rms}	2500 V_{rms}
open contact circuit	1200 V_{rms}	1200 V_{rms}	1200 V_{rms}
adjacent contact circuits	2500 V_{rms}	2500 V_{rms}	2000 V_{rms}
Clearance / creepage coil-contact circuit	≥ 4/4 mm	≥ 4/4 mm	≥ 4/4 mm
adjacent cont. circuits	≥ 3.5/9.5 mm	≥ 2.6/3.5 mm	≥ 1.8/3.5 mm
Material group of insulation parts		IIIa	
Insulation to IEC 60664-1			
Type of insulation coil-contact circuit	basic	basic	basic
open contact circuit	functional	functional	functional
adjacent contact circuits	basic	basic	functional
Rated insulation voltage		250 V	
Pollution degree		2	
Rated voltage system		230 / 400 V	
Overvoltage category		III	
RoHS - Directive 2002/95/EC		compliant	
Ambient temperature range		-40...+70°C	
Terminals		screw	
Terminal screw torque acc. IEC 61984		0.5 Nm	
max.		0.7 Nm	
Wire cross section			
single wire		2 x 2.5 mm^2	
fine wire		2 x 2.5 mm^2	
with bootlace crimp (DIN 46228/1)		2 x 1.5 mm^2	

Derating curve

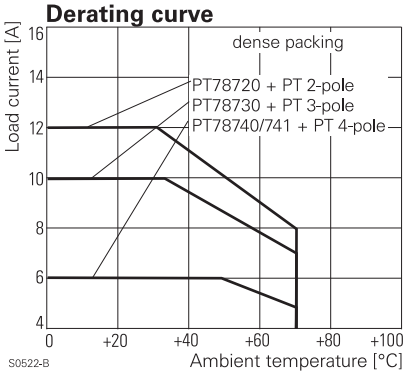

Datasheet 2010/11 Rev. JK1
www.tycoelectronics.com
www.schrackrelays.com
© 2010 Tyco Electronics Ltd.

Datasheets and product specification acc. IEC 61810-1 and to be used only together with the 'Definitions' section.

Datasheets and product data is subject to the terms of the disclaimer and all chapters of the 'Definitions' section, available at http://relays.tycoelectronics.com/definitions

Datasheets, product data, 'Definitions' section, application notes and all specifications are subject to change.

Accessories Miniature Relay PT (Continued)

Technical data (Continued)	2-pole	3-pole	4-pole
Insertion cycles		A (10)	
Max. Insertion Force total		100 N	
Mounting distance		≥ 0, dense packing	
Weight	41 g	48 g	55 g
Packaging unit		10 pcs	

DIN-rail socket with screw type terminals

Type		Part Number
PT 78 720	DIN-rail socket with screw type terminals, 2 pole	6-1415034-1
PT 78 730	DIN-rail socket with screw type terminals, 3 pole	9-1415071-1
PT 78 740	DIN-rail socket with screw type terminals, 4 pole	4-1415033-1
PT 78 741	DIN-rail socket with screw type terminals, 4 pole package with protection diode module A1+, A2-	5-1415034-1

Accessories for PT 78 720, PT 78 730, PT 78 740, PT 78 741

Type		Part Number
PT 17 016	Plastic retaining clip PT, relay height 29 mm	5-1415037-1
PT 17 024	Plastic retaining clip PT with ejecting function, relay height 29 mm	1816124-1
PT 28 800	Metal retaining clip PT, relay height 29 mm	5-1419111-9
PT 17 040	Marking tag	6-1415037-1
PT 17 0R6	Jumper bar, max load 12 A for connection of up to 6 PT sockets	1860517-5

PT17 016

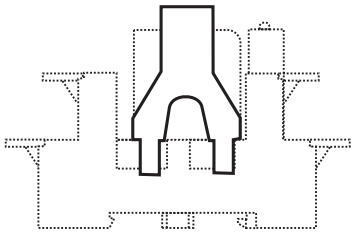

S0427-CH

PT17 024

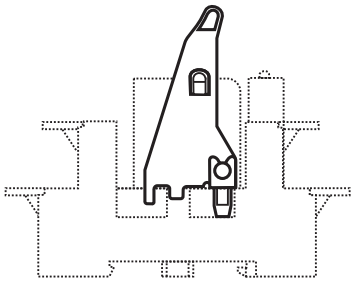

S0427-CI

Marking tags
- White marking area 28 x 6 mm
- Snaps on socket in up to 4 positions

LED- and Protection Modules for PT 78 72P, PT 78 74P, PT 78 722, PT 78 742, PT 78 720, PT 78 730, PT 78 740

Easy insertion of module into the socket
Wiring in parallel to the coil

Type			Part Number
PTM T0 0A0	EM09	Protection diode (standard, A1+, A2-)	9-1415036-1
PTM T0 0L0	EM01	Protection diode (A1-, A2+)	1415037-1
PTM U0 524	EM02	RC-network 6...60 VAC	1-1415037-1
PTM U0 730	EM03	RC-network 110...230 VAC	2-1415037-1
PTM V0 524	EM04	Varistor 24 VAC	3-1415037-1
PTM V0 615	EM13	Varistor 115 VAC	6-1415365-1
PTM V0 730	EM05	Varistor 230 VAC	4-1415037-1
PTM D0 730	EM31	Residual current bypass RC 110…230 VAC	1415037-2
PTM R0 730	EM29	Residual current bypass resistor 110…230 VAC	1-1415539-2



F0231-A



F0232-A

LED

PTM L0 024	EM18	red LED 6...24 VDC w. prot.diode (std, A1+, A2-)	5-1415036-1
PTM G0 024	EM12	green LED 6...24 VDC w. prot.diode (std, A1+, A2-)	2-1415036-1
PTM L1 024	EM08	red LED 6...24 VDC w. prot. diode (A1-, A2+)	8-1415036-1
PTM L0 060	EM16	red LED 24…60 VDC w. prot.diode (std, A1+, A2-)	5-1415539-3
PTM G0 060	EM25	green LED 24…60 VDC w. prot.diode (std, A1+, A2-)	7-1415539-7
PTM L0 110	EM19	red LED 60...110 VDC w. prot. diode (A1+, A2-)	2-1415392-1
PTM G0 110	EM26	green LED 60…110 VDC w. prot diode (A1+, A2-)	1-1415539-7
PTM L0 220	EM27	red LED 110…220 VDC w. prot. diode (A1+, A2-)	1-1415539-4
PTM G0 220	EM28	green LED 110…220 VDC w. prot diode (A1+, A2-)	1-1415539-6
PTM L0 524	EM07	red LED 6...24 VDC/VAC	6-1415036-1
PTM G0 524	EM11	green LED 6...24 VDC/VAC	3-1415036-1
PTM L0 560	EM14	red LED 24...60 VDC/VAC	1-1415539-3
PTM G0 560	EM30	green LED 24...60 VDC/VAC	1-1415539-5
PTM L0 730	EM06	red LED 110...230 VAC	7-1415036-1
PTM G0 730	EM10	green LED 110...230 VAC	4-1415036-1

Relay Packages

Complete packages consisting of a relay mounted on a socket: see Relay Package PT

Datasheet 2010/11 Rev. JK1
www.tycoelectronics.com
www.schrackrelays.com
© 2010 Tyco Electronics Ltd.

Datasheets and product specification acc. IEC 61810-1 and to be used only together with the 'Definitions' section.

Datasheets and product data is subject to the terms of the disclaimer and all chapters of the 'Definitions' section, available at http://relays.tycoelectronics.com/definitions

Datasheets, product data, 'Definitions' section, application notes and all specifications are subject to change.

Accessories Miniature Relay PT (Continued)

PT sockets for PCB mount and with solder terminals

PT 78 600, socket with solder terminals, 4-pole



F0132-A

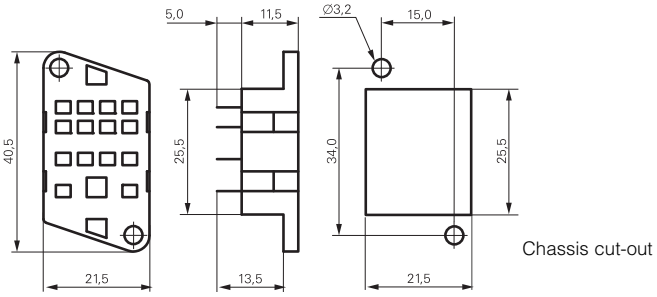

S0308-AA

PT 78 602, PT 78 603, PT 78 604, socket with PCB terminals, 2-, 3- and 4-pole



F0133-A

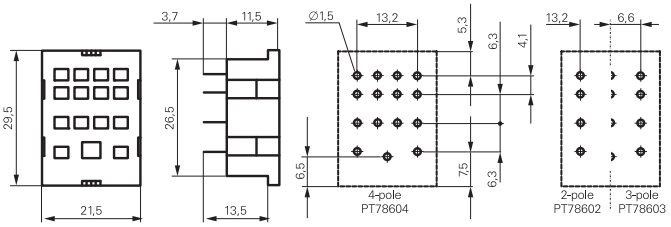

S0308-BB

PT 78 601, socket with solder terminals, 4-pole



F0134-A

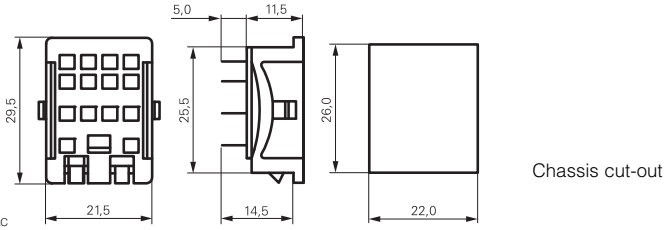

S0308-AC

Technical data	2-pole	3-pole	4-pole
Rated voltage / max. switching voltage AC		240 / 400 VAC	
Rated current	12 A	10 A	6 A
Dielectric strength coil-contact circuit	2500 V_{rms}	2500 V_{rms}	2500 V_{rms}
open contact circuit	1200 V_{rms}	1200 V_{rms}	1200 V_{rms}
adjacent contact circuits	2500 V_{rms}	2500 V_{rms}	2000 V_{rms}
Clearance / creepage coil-contact circuit	≥ 4/4 mm	≥ 4/4 mm	≥ 4/4 mm
adjacent cont. circuits	≥ 3.5/9.5 mm	≥ 2.6/3.5 mm	≥ 1.8/3.5 mm
Material group of insulation parts		IIIa	
Insulation to IEC 60664-1			
Type of insulation coil-contact circuit	basic	basic	basic
open contact circuit	functional	functional	functional
adjacent contact circuits	basic	basic	functional
Rated insulation voltage		250 V	
Pollution degree		2	
Rated voltage system		230 / 400 V	
Overvoltage category		III	

Datasheet 2010/11 Rev. JK1
www.tycoelectronics.com
www.schrackrelays.com
© 2010 Tyco Electronics Ltd.

Datasheets and product specification acc. IEC 61810-1 and to be used only together with the 'Definitions' section.

Datasheets and product data is subject to the terms of the disclaimer and all chapters of the 'Definitions' section, available at http://relays.tycoelectronics.com/definitions

Datasheets, product data, 'Definitions' section, application notes and all specifications are subject to change.

Accessories Miniature Relay PT (Continued)

Technical data (Continued)	**2-pole**	**3-pole**	**4-pole**
RoHS - Directive 2002/95/EC	compliant as per product date code 0517		
Ambient temperature range	-40...+80°C		
Terminals	pcb, solder terminals		
Insertion cycles	A (10)		
Max. Insertion Force total	100 N		
Mounting distance	≥ 0, dense packing		
Resistance to soldering heat	270°C / 10 s		
Weight	6 g	7 g	7 g
Packaging unit	25 pcs		

PT sockets		
Type		Part Number
PT 78 600	Socket with solder terminals, 4 pole	4-1415043-1
PT 78 602	Socket with PCB terminals, 2 pole	5-1415043-1
PT 78 603	Socket with PCB terminals, 3 pole	1393162-5
PT 78 604	Socket with PCB terminals, 4 pole	3-1415043-1
PT 78 601	Socket with solder terminals, 4 pole	6-1415043-1

Accessories for PT 78 600, PT 78 601, PT 78 602, PT 78 603, PT 78 604		
Type		Part Number
PT 28 802	Metal retaining clip PT, relay height 29 mm	1393162-1

Datasheet 2010/11
www.tycoelectronics.com
www.schrackrelays.com
© 2010 Tyco Electronics Ltd.
Rev. JK1

Datasheets and product specification acc. IEC 61810-1 and to be used only together with the 'Definitions' section.

Datasheets and product data is subject to the terms of the disclaimer and all chapters of the 'Definitions' section, available at http://relays.tycoelectronics.com/definitions

Datasheets, product data, 'Definitions' section, application notes and all specifications are subject to change.