

W58 series

P&B Push To Reset Only Thermal Circuit Breaker

Features

- 0.5 amp to 30 amp ratings.
- Cannot be manually tripped.
- Button extends for visual trip indication.
- Push button to reset breaker.
- Termination is screw or .250" QC.
- Bottom marked amperage rating optionally available.

Agency Approvals

W58 Series is UL 1077 Recognized as Supplementary Protectors, File E69543 and meets Ignition Protection requirements in accordance with UL 1500. W58 Series is also CSA Accepted as Supplementary Protectors (Appliance Component Protectors), File LR15734.

Users should thoroughly review the technical data before selecting a product part number. It is recommended that users also seek out the pertinent approvals files of the agencies/laboratories and review them to confirm the product meets the requirements for a given application.

Electrical Data @ +25°C

Calibration: Breaker will continuously carry 100% of rated load. It may trip between 101% and 145% of rated load, but must trip at 145% at 25°C.
Dielectric Strength: Over 1,500 volts RMS.
Maximum Operating Voltages: 50VDC; 250VAC.
Interrupt Capacity: 2,000 amps at 50VDC (0.5 - 30 amp models).
1,000 amps at 250VAC (0.5 - 30 amp models).
Note: 30 amp model not UL or CSA.
Resettable Overload Capacity: Ten times rated current.

Maximum Resistance vs. Current Rating @ +25°C

Current Rating in Amps	Maximum Resistance in Ohms	Current Rating in Amps	Maximum Resistance in Ohms
0.5	5.0	8	0.020
1	1.35	9	0.020
2	0.32	10	0.014
3	0.18	12	0.010
4	0.10	15	0.010
5	0.026	20	0.005
6	0.026	25	0.006
7	0.020	30*	0.004

*No UL/CSA

Mechanical/Environmental Data

Shock: Withstands to 10g.
Endurance Cycling: Over 1,000 cycles at 200% of rated load.
Vibration: Withstands to 10g at 10-55 Hz.
Weight: Less than 1 1/2 oz. (42.5g).

Time vs. Current Trip Curve @ +25°C

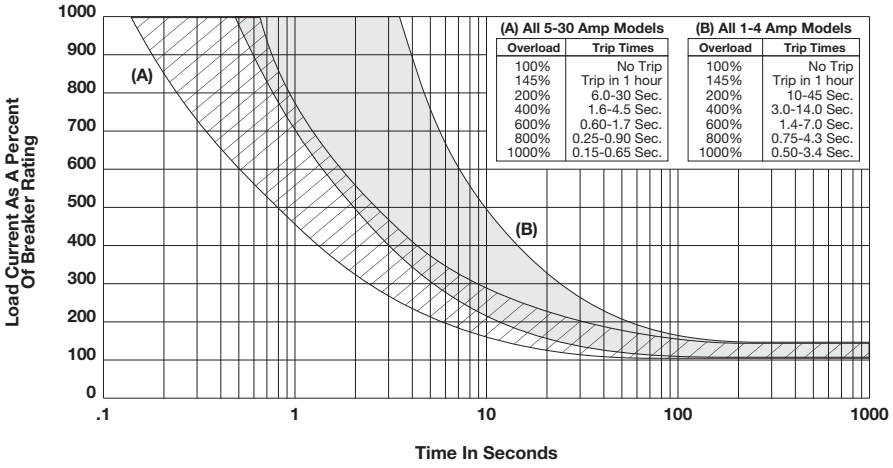

(A) All 5-30 Amp Models	
Overload	Trip Times
100%	No Trip
145%	Trip in 1 hour
200%	6.0-30 Sec.
400%	1.6-4.5 Sec.
600%	0.60-1.7 Sec.
800%	0.25-0.90 Sec.
1000%	0.15-0.65 Sec.

(B) All 1-4 Amp Models	
Overload	Trip Times
100%	No Trip
145%	Trip in 1 hour
200%	10-45 Sec.
400%	3.0-14.0 Sec.
600%	1.4-7.0 Sec.
800%	0.75-4.3 Sec.
1000%	0.50-3.4 Sec.

Ambient Compensation Chart

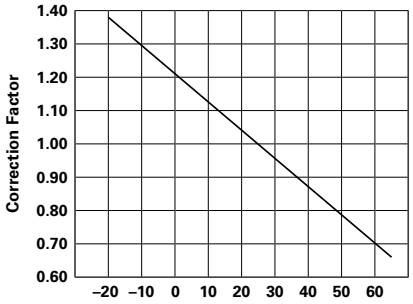

To use this chart: Read up from the ambient temperature to the curve, and across to find a correction factor. Multiply the breaker rating by the correction factor to determine the compensated rating. Calculate the overloads in terms of the compensated rating to use the published trip curve.

Ordering Information

Typical Part No. >	W	58	-X	B	1	A	4	A	-5

1. Designator:
W = Circuit breaker

2. Series Number:
58 = Single Pole, Push-to-Reset

3. Circuit Function:
X = Series Trip

4. Button and Rate Marking:
A = White, plain, no rate marking, no trip band
B = White with red rate marking, red trip band
C = White with black rate marking, red trip band
E = White with red rate marking no trip band
F = White with black rate marking, no trip band
K = Black, plain, no rate marking, no trip band

Note: Rate marking on the bottom of the case is available on a special order basis. Consult factory for details.

5. Mounting Bushing:
1 = Metal, 7/16" x .500" (12.70mm) long
4 = Metal, 15/32" x .300" (7.62mm) long, black
6 = Metal, 3/8" x .465" (11.81mm) long, round
7 = Plastic, 3/8" x .465" (11.81mm) long, round

6. Terminals:
A = Quick connect .250" (6.35mm) straight
C = 6/32 screw 90° (screws installed)
D = 6/32 screw 90° (screws bulk packed)

7. Mounting Hardware:
4 = Metal, knurled nut/hex nut
6 = Metal, knurled nut/hex nut/lock washer
12 = Metal, knurled nut/lock washer
15 = Metal, two hex nuts/lock washer
18 = Metal, hex nut/lock washer
7 = Plastic, knurled nut
22 = Plastic knurled nut, metal lock washer
99 = No mtg. hardware supplied (Use C, Step #8)

Note: For other hardware combinations, order separately. See mounting hardware Ordering Information table.

8. Mounting Hardware Packaging:
A = Assembled to bushing
B = Bulk unassembled
C = No mounting hardware

9. Specify Amp Rating:

0.5	3	6	9	15	30*
1	4	7	10	20	
2	5	8	12	25	

*Not UL or CSA

Stock Items – Authorized distributors are more likely to stock the following items.

W58-XB1A4A-1	W58-XB1A4A-6	W58-XB1A4A-15	W58-XC4C12A-2	W58-XC4C12A-15
W58-XB1A4A-2	W58-XB1A4A-7	W58-XB1A4A-20	W58-XC4C12A-3	W58-XC4C12A-20
W58-XB1A4A-3	W58-XB1A4A-8	W58-XB1A4A-25	W58-XC4C12A-5	W58-XC4C12A-25
W58-XB1A4A-4	W58-XB1A4A-10	W58-XB1A4A-30	W58-XC4C12A-7	W58-XC4C12A-30
W58-XB1A4A-5	W58-XB1A4A-12	W58-XC4C12A-1	W58-XC4C12A-10	

Outline Dimensions

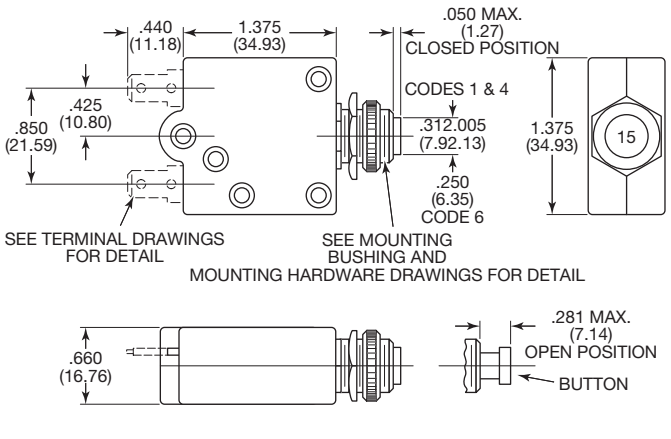

Terminal Options

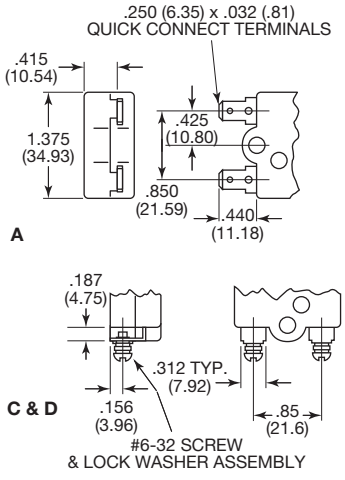

Revised 5-10
www.tycoelectronics.com

Dimensions are in inches over (millimeters) unless otherwise specified.

Dimensions are shown for reference purposes only. Specifications and availability subject to change.

USA: 1-800-522-6752
Canada: 1-905-470-4425
Mexico: 01-800-733-8926
C. America: 52-55-1106-0803
South America: 55-11-2103-6000
Hong Kong: 852-2735-1628
Japan: 81-44-844-8013
UK: 44-8706-080208

Mounting Hardware

Hex Nut **Knurled Nut** **Lockwasher**

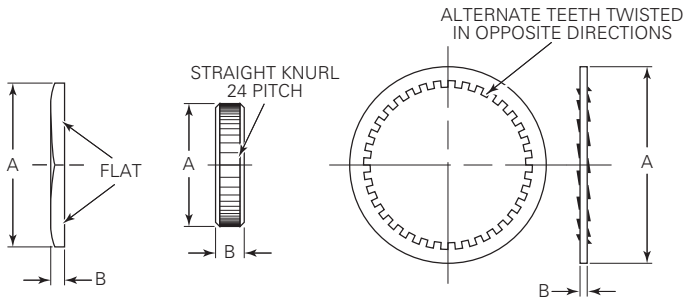

Mounting Hardware Dimensions

	Dimension	Metal Hex Nut	Metal Knurled Nut	Plastic Knurled Nut	Metal Lockwasher
A.	3/8"	.556 (14.12)	.562 (14.27)	.74 (18.8)	.562 (14.27)
	7/16"	.625 (15.88)	.625 (15.88)	–	.540 (13.72)
	15/32"	.556 (14.12)	.625 (15.88)	–	.600 (15.24)
B.	3/8"	.085 (2.16)	.078 (1.98)	.126 (3.2)	.018 (.457)
	7/16"	.111 (2.82)	.125 (3.18)	–	.022 (.559)
	15/32"	.078 (1.98)	.125 (3.18)	–	.018 (.457)

Mounting Hardware Ordering Information

Mounting Bushing Code	Metal Knurled Nut	Plastic Knurled Nut	Metal Hex Nut	Metal Lock Washer
1	55-010A	–	55-011A	88-021B
4	•	–	55-001B	88-002A
6	55-008A	–	55-001D	88-006K
7	55-008A	1423696-2	55-001D	88-006K

• 55-010B (silver) 55-010E (black)

Mounting Bushing

Type 1

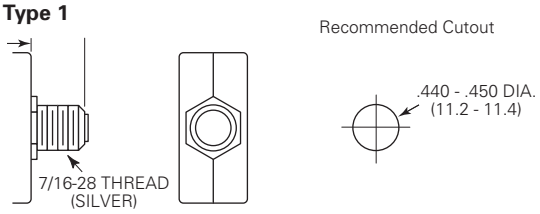

Type 4

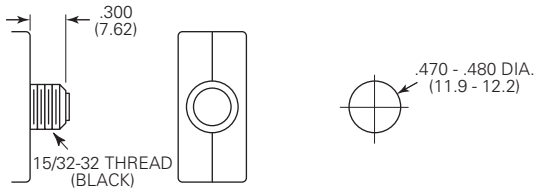

Type 6

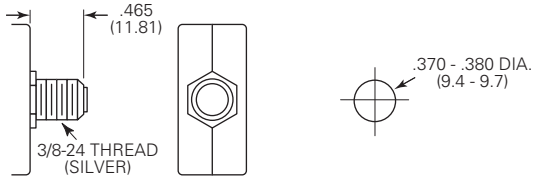

Type 7

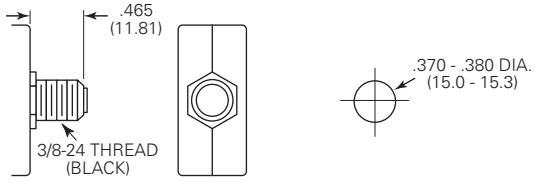

Optional Protective Boot

Silicone rubber boot is bonded to integral alumimum nut.

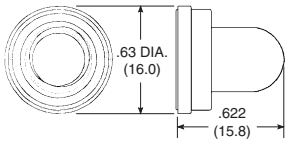

1-1423696-5
Black boot for W58 with 3/8"-24 bushing.

Optional Bottom Marking of Rating

This is available on a special order basis. Consult factory for details.



Disclaimer:
While Tyco Electronics and its affiliates referenced herein have made every reasonable effort to ensure the accuracy of the information contained in this document, Tyco Electronics cannot assure that this information is error free. For this reason, Tyco Electronics does not make any representation or offer any guarantee that such information is accurate, correct, reliable or current. Tyco Electronics reserves the right to make any adjustments to the information at any time. Tyco Electronics expressly disclaims any implied warranty regarding the information contained herein, including, but not limited to, the implied warranties of merchantability or fitness for a particular purpose. Tyco Electronics' only obligations are those stated in Tyco Electronics' Standard Terms and Conditions of Sale. Tyco Electronics will in no case be liable for any incidental, indirect or consequential damages arising from or in connection with, including, but not limited to, the sale, resale, use or misuse of its products. Users should rely on their own judgment to evaluate the suitability of a product for a certain purpose and test each product for its intended application.

In case of any potential ambiguities or questions, please don't hesitate to contact us for clarification.

© 2010 by Tyco Electronics Corporation. All Rights Reserved.
P&B, Potter & Brumfield, TE (logo) and Tyco Electronics are trademarks of the Tyco Electronics group of companies and its licensors.