DWG. NO 182186

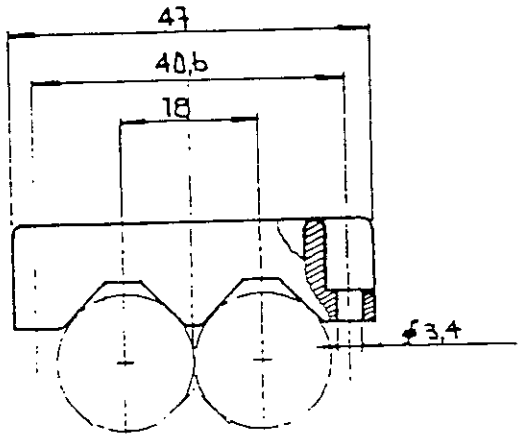

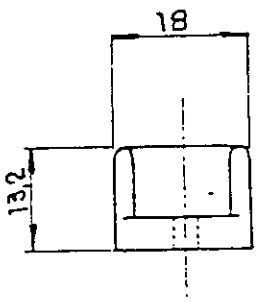

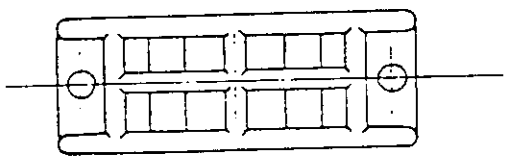

-1 AS SHOWN

L'ASSIEME E' COMPOSTO DA:

1/2 SERRACAVO

1 VITE A TESTA CILINDRICA M3X16 UNI 6107-67-5.8(R-500min-700max N/mm^2-UNI-3740-74)

1 DADO M3 UNI 5588-65-A-4D (UNI 3740-74)

VITE E DADO ZINCATI 3/5µm CON PASSIVAZIONE CROMICA F. Zn 311 UNI 4721 .

NOTA· L'ASSIEME DEVE ESSERE USATO CON LA CORAZZA P/N 182194

CUSTOMER DRAWING

A	IN PRODUZ. SUPERA IL 182192-1 RELEASED FOR PROD - 6/5/94	DR	28/7/94
REV. LTR	REVISION RECORD	CHK	28/7/94
	DIT DATE E.C.N.	APP.	-

DO NOT SCALE
REMOVE BURRS BREAK EDGES
SURFACE TEXTURE √
QTY REQ'D PER UNIT
MAT PC CARICATO VETRO - VERDE
HT. TR.
FINISH

UNLESS OTHERWISE SPECIFIED

METRIC (mm) | INCHES (")

EUROPEAN PROJECTION | THIRD ANGLE PROJECTION

0 DEC. PLACE ± 0,4
1 DEC. PLACE ± 0,05
2 DEC. PLACE ± 0,005
3 DEC. PLACE ± 0,005

2 DEC. PLACE ± .02
3 DEC. PLACE ± .003
4 DEC. PLACE ± .0002

ANGLES ± 1 ° | √ Rmax = 0.18 WEDM | √ Rmax = 0.1 EDM-GRIND

SCALE —

AMP ITALIA S.p.A.
Corso F.lli Cervi, 15
COLLEGNO (TORINO)

NAME ASSIEME SERRACAVO DIA(20+20)

LOC.	SIZE	Sheet	DWG. NO	REV
I	A4	1of1	182186	A

THIS INFORMATION IS CONFIDENTIAL AND IS DISCLOSED TO YOU ON CONDITION THAT NO FURTHER DISCLOSURE IS MADE BY YOU TO OTHER THAN AMP PERSONNEL WITHOUT WRITTEN AUTHORIZATION FROM AMP ITALIA S.p.A.