THIS DRAWING IS UNPUBLISHED. RELEASED FOR PUBLICATION 20
© COPYRIGHT 20 BY - ALL RIGHTS RESERVED.

2-2170724-2 AS SHOWN

REVISIONS					
P	LTR	DESCRIPTION	DATE	DWN	APVD
	1	PRELIMINARY	24OCT2013	JY	-

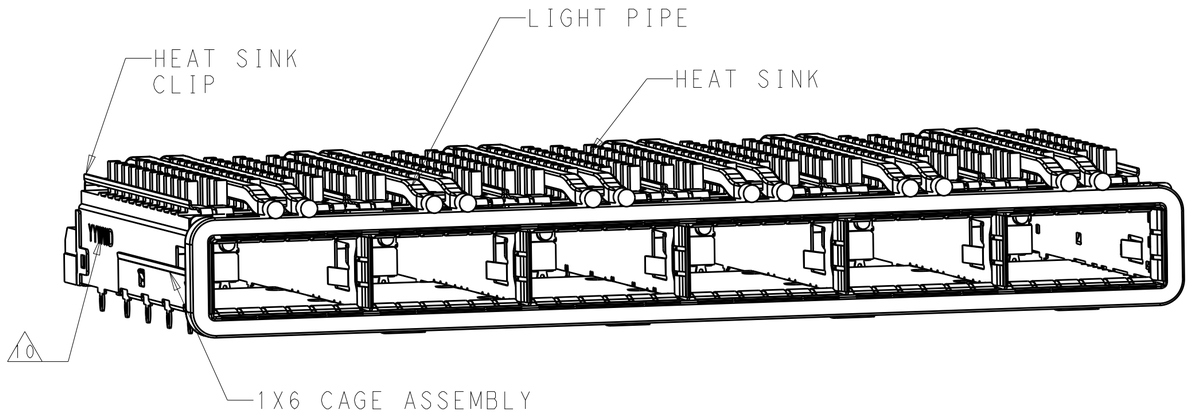

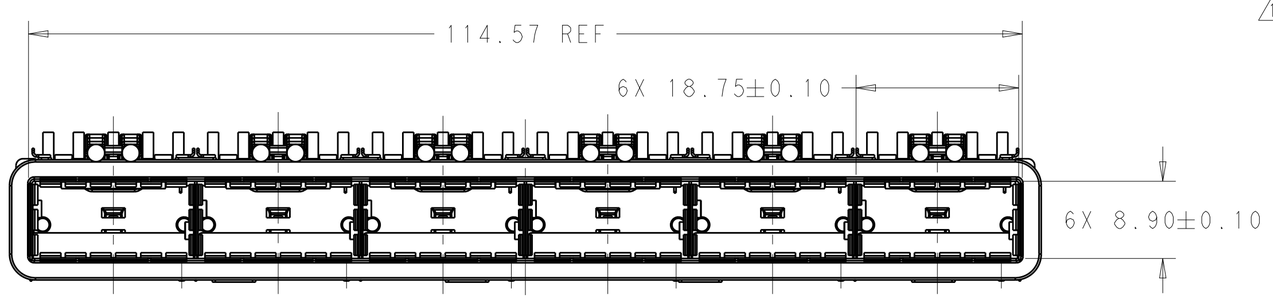

SCALE 2:1

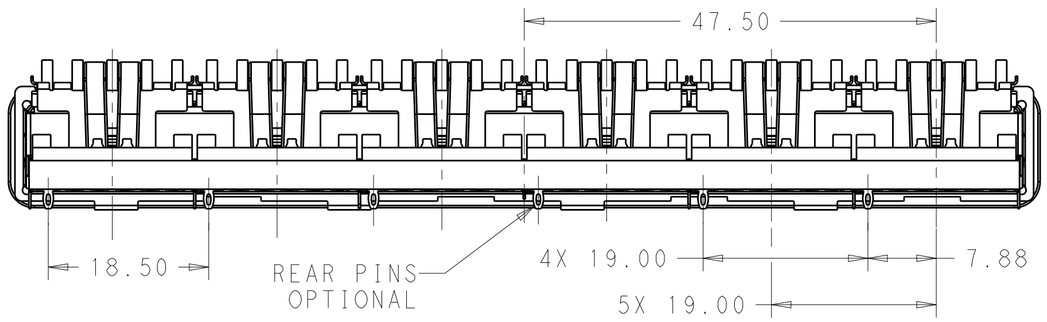

SECTION V-V
SCALE 2:1

1. COMPONENTS
   CAGE ASSEMBLY: NICKEL-SILVER ALLOY
   HEAT SINK: ALUMINUM/BLACK ANODIZE
   HEAT SINK CLIP: STAINLESS STEEL
   EMI SPRING: COPPER ALLOY/NICKEL PLATE
   LIGHT PIPE: CLEAR POLYCARBONATE WITH 94 V-0
   EMI GASKET: PLATED FILLED SILICONE WITH 94 V-0

2. REFERENCE APPLICATION SPECIFICATION 114-*****
   FOR RECOMMENDED DRILL HOLE DIAMETER AND
   PLATING THICKNESS

3. DATUM AND BASIC DIMENSION ESTABLISHED BY CUSTOMER

4. DIMENSION APPLIES WITH MODULE INSERTED IN CAGE

5. HEAT SINKS, HEAT SINK CLIPS AND LIGHT PIPES
   ARE SHIPPED ASSEMBLED ON CAGE

6. MINIMUM PC BOARD THICKNESS: SINGLE SIDED: 1.57 MIN
   DOUBLE SIDED: 3.00 MIN

7. DATUM -A- IS TOP SURFACE OF THE HOST BOARD.

8. THESE HOLES ARE OPTIONAL WHEN THE REAR PINS ARE REMOVED.

9. MATES WITH QSFP28 MSA COMPATIBLE TRANSCEIVER.

10. DATE CODE (YYWWD) MARKED APPROXIMATELY AS SHOWN.

11. NOTED DIMENSIONS ONLY APPLY TO CAGE ASSEMBLY WITH LIGHT PIPE.

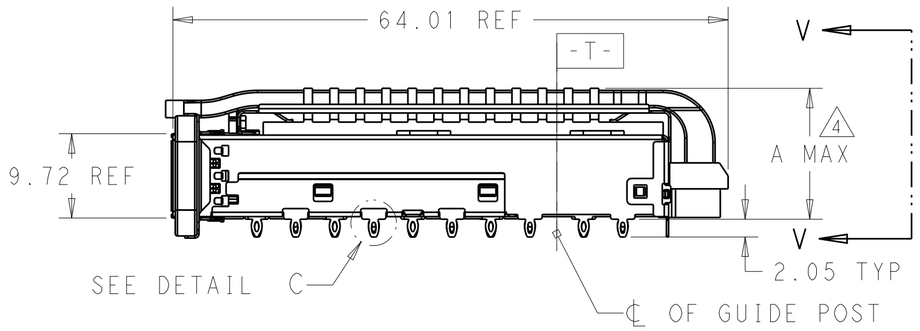

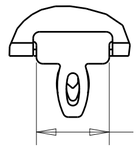

DETAIL C
SCALE 6:1

PRELIMINARY PART- NOT RELEASED FOR PRODUCTION

THIS DRAWING IS A CONTROLLED DOCUMENT.

DIMENSIONS: mm

TOLERANCES UNLESS OTHERWISE SPECIFIED:
0 PLC ±-
1 PLC ±0.25
2 PLC ±0.2
3 PLC ±-
4 PLC ±-
ANGLES ±-

MATERIAL SEE NOTES -
FINISH SEE NOTES -

DWN JASON YANG 24OCT2013
CHK -
APVD -
PRODUCT SPEC -
APPLICATION SPEC -
WEIGHT -

TE Connectivity

NAME CAGE ASSEMBLY, 1X6, QSFP28 WITH HEAT SINKS AND LIGHT PIPES, THRU BEZEL, GASKET

PRELIMINARY

SIZE	CAGE CODE	DRAWING NO	RESTRICTED TO
A2	00779	C-2170724	-

Customer Drawing | SCALE 3:1 | SHEET 1 OF 9 | REV 1

THIS DRAWING IS UNPUBLISHED. RELEASED FOR PUBLICATION 20
© COPYRIGHT 20 BY - ALL RIGHTS RESERVED.

REVISIONS

P	LTR	DESCRIPTION	DATE	DWN	APVD
	-	SEE SHEET 1	-	-	-

HEAT SINK OPTION

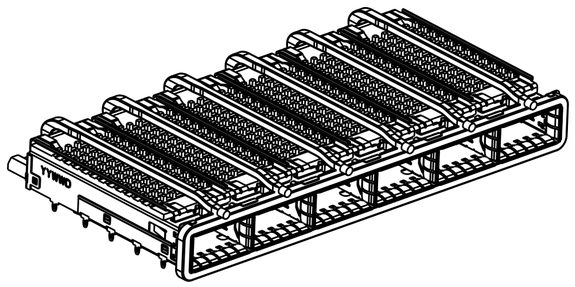

PCI HEAT SINK
SCALE 1:1

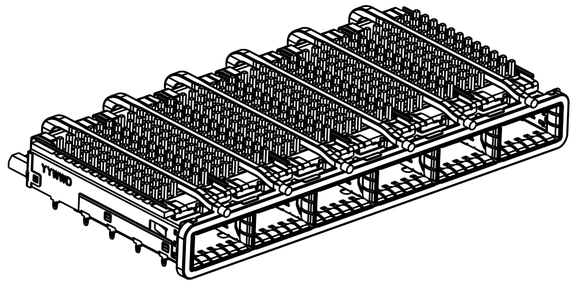

SAN HEAT SINK
SCALE 1:1

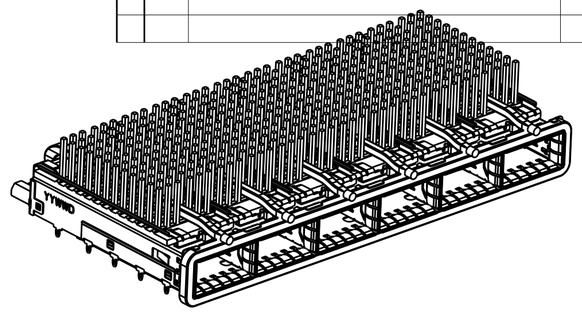

NETWORKING HEAT SINK
SCALE 1:1

LIGHT PIPE OPTION

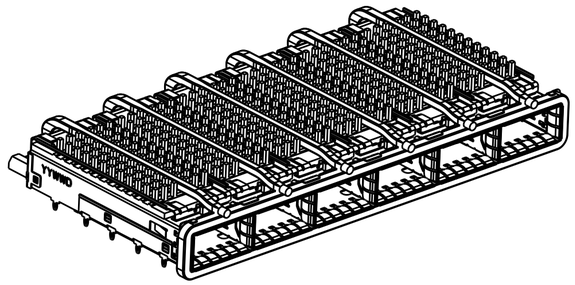

SINGLE LIGHT PIPE
SCALE 1:1

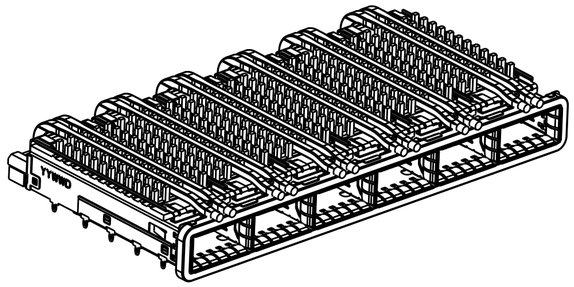

DUAL LIGHT PIPE
SCALE 1:1

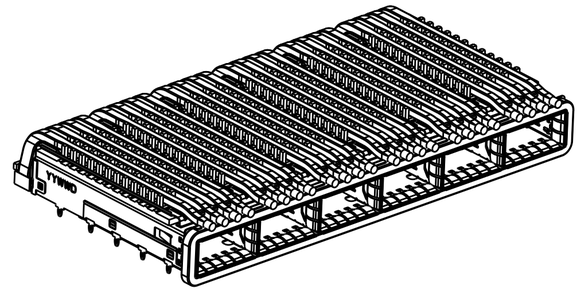

QUAD LIGHT PIPE
SCALE 1:1

OF REAR PIN OPTION

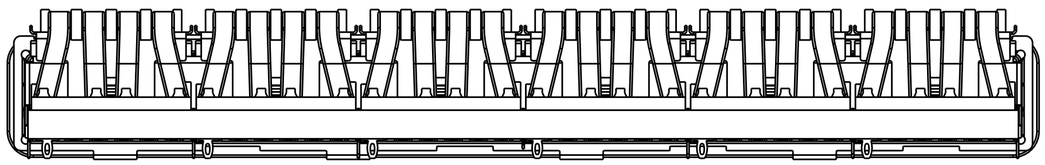

1 REAR PIN
SCALE 2:1

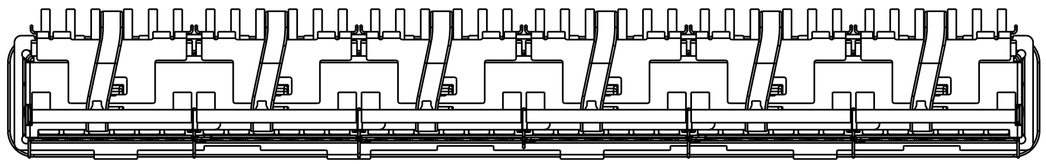

0 REAR PIN
SCALE 2:1

THIS DRAWING IS A CONTROLLED DOCUMENT.

DIMENSIONS: mm

TOLERANCES UNLESS OTHERWISE SPECIFIED:
0 PLC ±-
1 PLC ±0.25
2 PLC ±0.2
3 PLC ±-
4 PLC ±-
ANGLES ±-

MATERIAL SEE NOTES -

FINISH SEE NOTES -

DWN JASON YANG 24OCT2013
CHK -
APVD -
PRODUCT SPEC -
APPLICATION SPEC -
WEIGHT -

TE Connectivity

NAME CAGE ASSEMLBY, 1X6, QSFP28 WITH HEAT SINKS AND LIGHT PIPES, THRU BEZEL, GASKET

SIZE	CAGE CODE	DRAWING NO	RESTRICTED TO
A2	00779	C-2170724	-

Customer Drawing | SCALE 3:1 | SHEET 2 OF 9 | REV 1

THIS DRAWING IS UNPUBLISHED. RELEASED FOR PUBLICATION 20
© COPYRIGHT 20 BY - ALL RIGHTS RESERVED.

REVISIONS

P	LTR	DESCRIPTION	DATE	DWN	APVD
	-	SEE SHEET 1	-	-	-

# OF REAR PIN	DIM A	APPLICATION	LIGHT PIPE OPTION	PART NUMBER
0	23.0	NETWORKING	QUAD	4-2170724-6
0	16.0	SAN	QUAD	4-2170724-5
0	13.7	PCI	QUAD	4-2170724-4
1	23.0	NETWORKING	QUAD	4-2170724-3
1	16.0	SAN	QUAD	4-2170724-2
1	13.7	PCI	QUAD	4-2170724-1
0	23.0	NETWORKING	DUAL	2-2170724-6
0	16.0	SAN	DUAL	2-2170724-5
0	13.7	PCI	DUAL	2-2170724-4
1	23.0	NETWORKING	DUAL	2-2170724-3
1	16.0	SAN	DUAL	2-2170724-2
1	13.7	PCI	DUAL	2-2170724-1
0	23.0	NETWORKING	SINGLE	2170724-6
0	16.0	SAN	SINGLE	2170724-5
0	13.7	PCI	SINGLE	2170724-4
1	23.0	NETWORKING	SINGLE	2170724-3
1	16.0	SAN	SINGLE	2170724-2
1	13.7	PCI	SINGLE	2170724-1

THIS DRAWING IS A CONTROLLED DOCUMENT.

DIMENSIONS: mm

TOLERANCES UNLESS OTHERWISE SPECIFIED:
0 PLC ±-
1 PLC ±0.25
2 PLC ±0.2
3 PLC ±-
4 PLC ±-
ANGLES ±-

MATERIAL SEE NOTES -

FINISH SEE NOTES -

DWN JASON YANG 24OCT2013
CHK -
APVD -
PRODUCT SPEC -
APPLICATION SPEC -
WEIGHT -

TE Connectivity

NAME CAGE ASSEMLBY, 1X6, QSFP28 WITH HEAT SINKS AND LIGHT PIPES, THRU BEZEL, GASKET

SIZE	CAGE CODE	DRAWING NO	RESTRICTED TO
A2	00779	C-2170724	-

Customer Drawing | SCALE 3:1 | SHEET 3 OF 9 | REV 1

THIS DRAWING IS UNPUBLISHED. RELEASED FOR PUBLICATION 20
© COPYRIGHT 20 BY - ALL RIGHTS RESERVED.

REVISIONS					
P	LTR	DESCRIPTION	DATE	DWN	APVD
	-	SEE SHEET 1	-	-	-

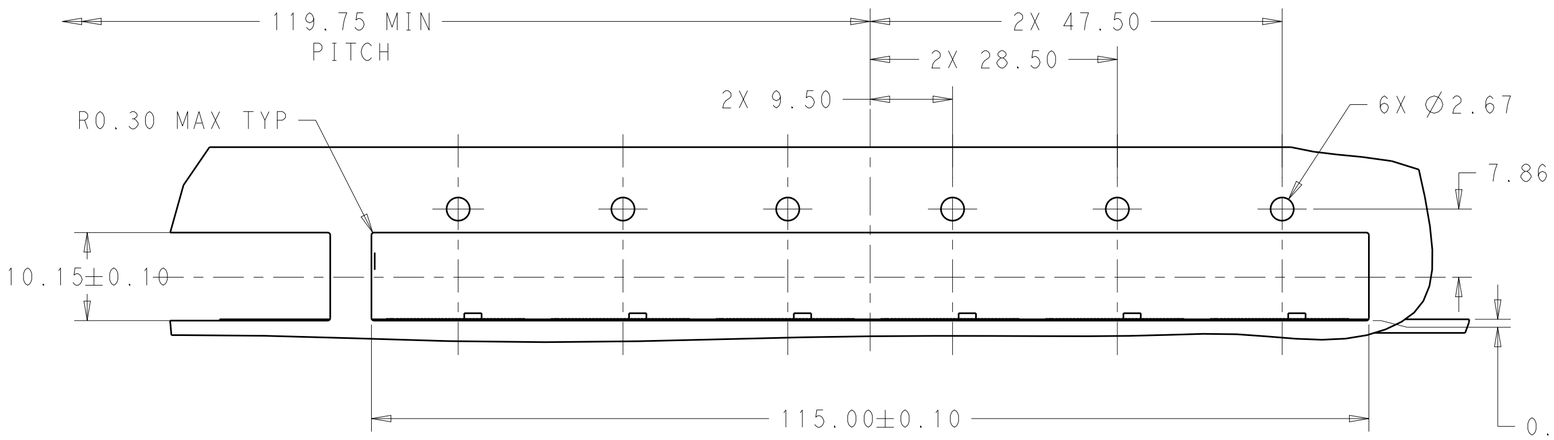

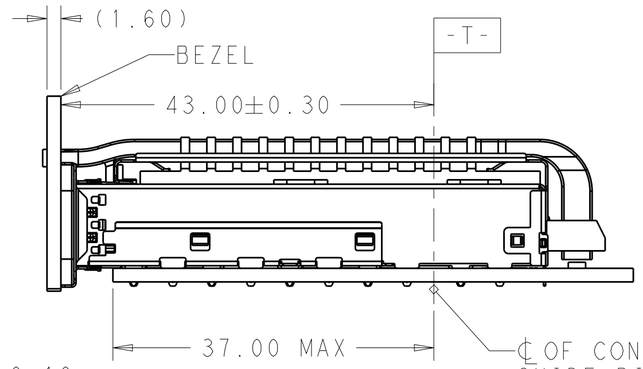

SINGLE SIDE MOUNTING
SCALE 2:1

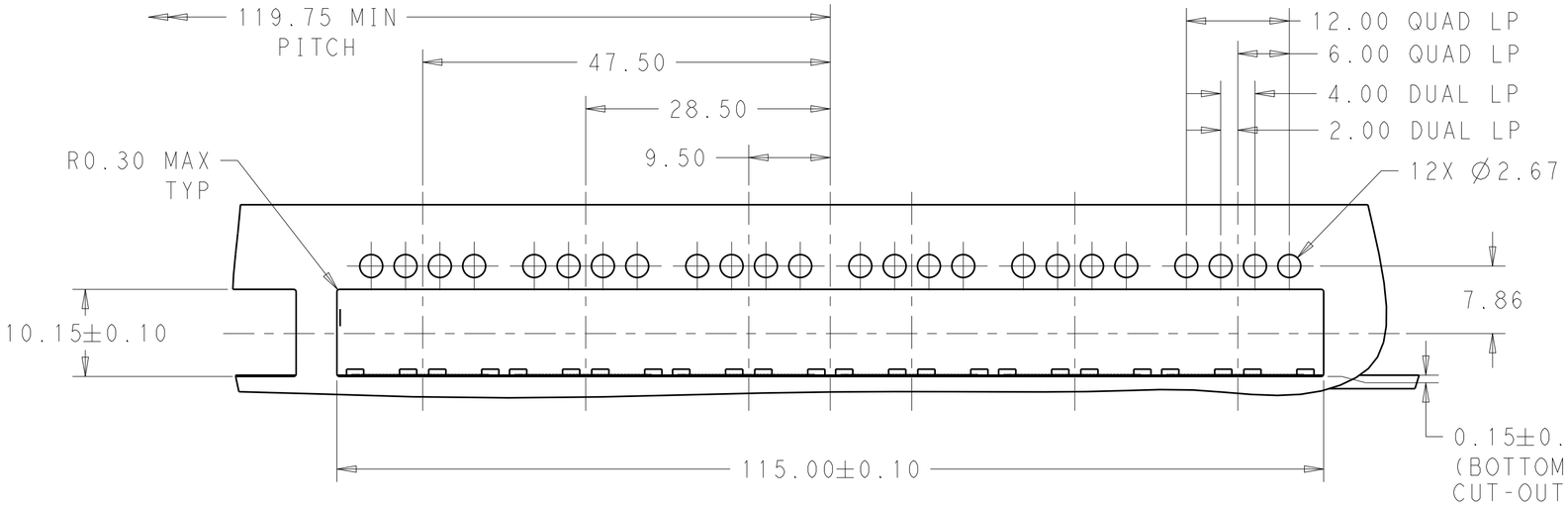

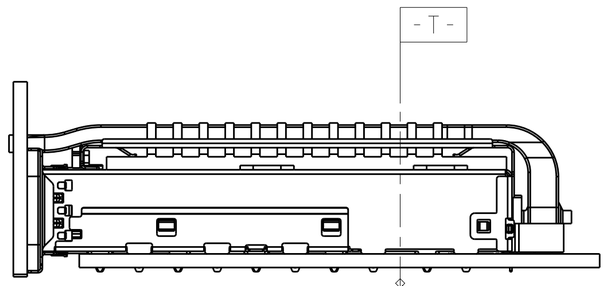

SINGLE SIDE MOUNTING
SCALE 2:1

PRELIMINARY PART- NOT RELEASED FOR PRODUCTION

THIS DRAWING IS A CONTROLLED DOCUMENT.		DWN JASON YANG 24OCT2013	TE Connectivity
DIMENSIONS: mm	TOLERANCES UNLESS OTHERWISE SPECIFIED: 0 PLC ±- 1 PLC ±0.25 2 PLC ±0.2 3 PLC ±- 4 PLC ±- ANGLES ±-	CHK -	NAME CAGE ASSEMLBY, 1X6, QSFP28 WITH HEAT SINKS AND LIGHT PIPES, THRU BEZEL, GASKET
		APVD -	
		PRODUCT SPEC -	SIZE A2 / CAGE CODE 00779 / DRAWING NO C-2170724 / RESTRICTED TO -
		APPLICATION SPEC -	
MATERIAL SEE NOTES -	FINISH SEE NOTES -	WEIGHT -	SCALE 3:1 / SHEET 4 OF 9 / REV 1
		Customer Drawing	

THIS DRAWING IS UNPUBLISHED. RELEASED FOR PUBLICATION 20
© COPYRIGHT 20 BY - ALL RIGHTS RESERVED.

REVISIONS

P	LTR	DESCRIPTION	DATE	DWN	APVD
	-	SEE SHEET 1	-	-	-

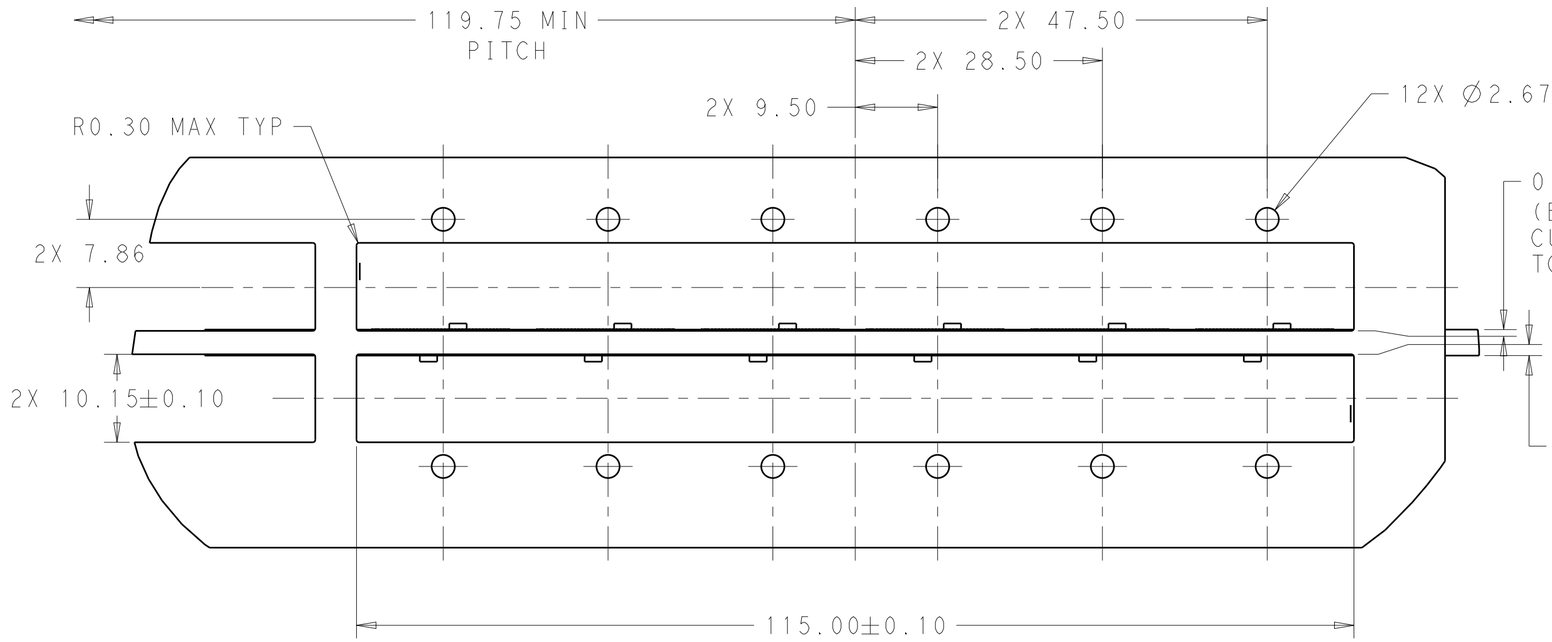

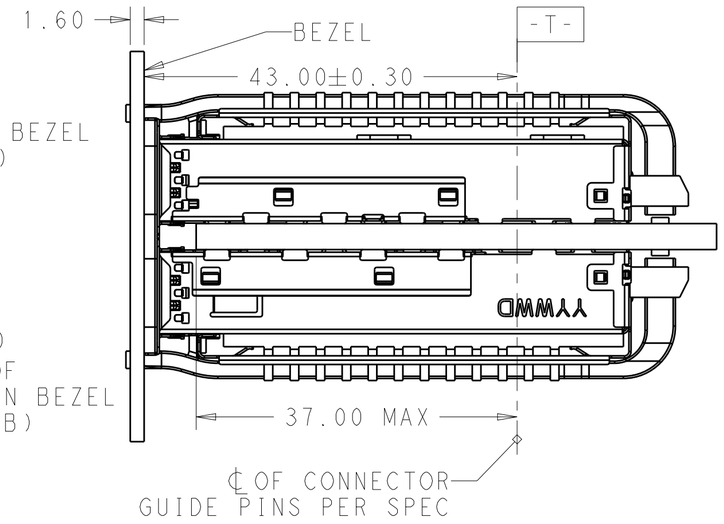

BELLY TO BELLY MOUNTING
SCALE 2:1

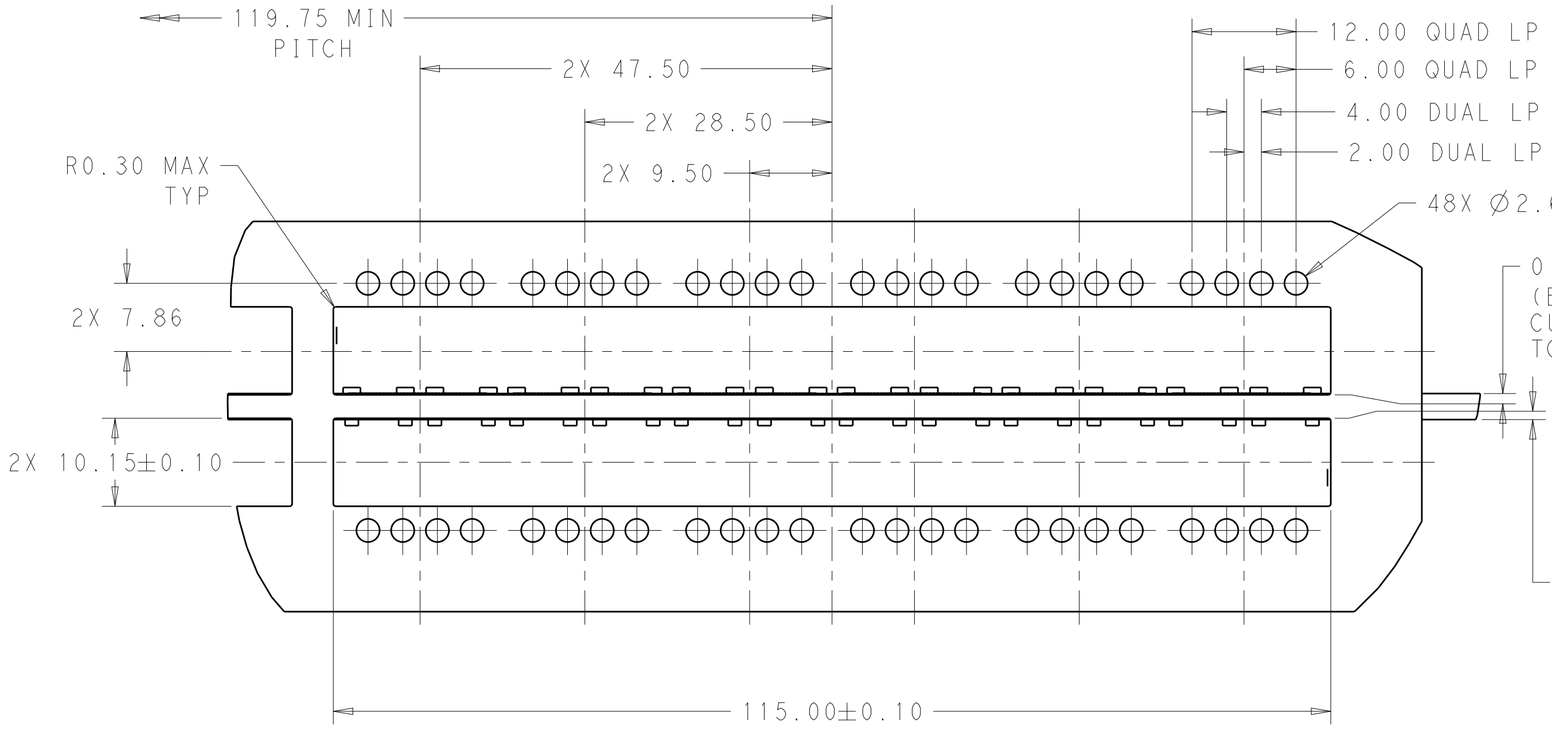

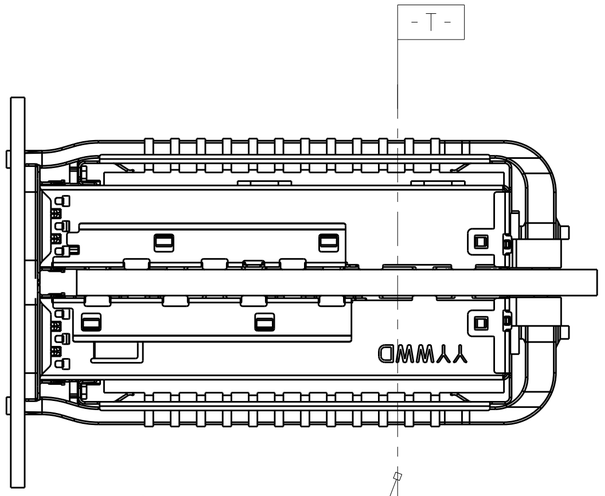

BELLY TO BELLY MOUNTING
SCALE 2:1

THIS DRAWING IS A CONTROLLED DOCUMENT.

DIMENSIONS: mm

TOLERANCES UNLESS OTHERWISE SPECIFIED:
0 PLC ±-
1 PLC ±0.25
2 PLC ±0.2
3 PLC ±-
4 PLC ±-
ANGLES ±-

MATERIAL SEE NOTES -

FINISH SEE NOTES -

DWN JASON YANG 24OCT2013
CHK -
APVD -
PRODUCT SPEC -
APPLICATION SPEC -
WEIGHT -

TE Connectivity

NAME CAGE ASSEMLBY, 1X6, QSFP28 WITH HEAT SINKS AND LIGHT PIPES, THRU BEZEL, GASKET

SIZE	CAGE CODE	DRAWING NO	RESTRICTED TO
A2	00779	C-2170724	-

Customer Drawing | SCALE 3:1 | SHEET 5 OF 9 | REV 1

THIS DRAWING IS UNPUBLISHED. RELEASED FOR PUBLICATION 20
© COPYRIGHT 20 BY - ALL RIGHTS RESERVED.

REVISIONS

P	LTR	DESCRIPTION	DATE	DWN	APVD
	-	SEE SHEET 1	-	-	-

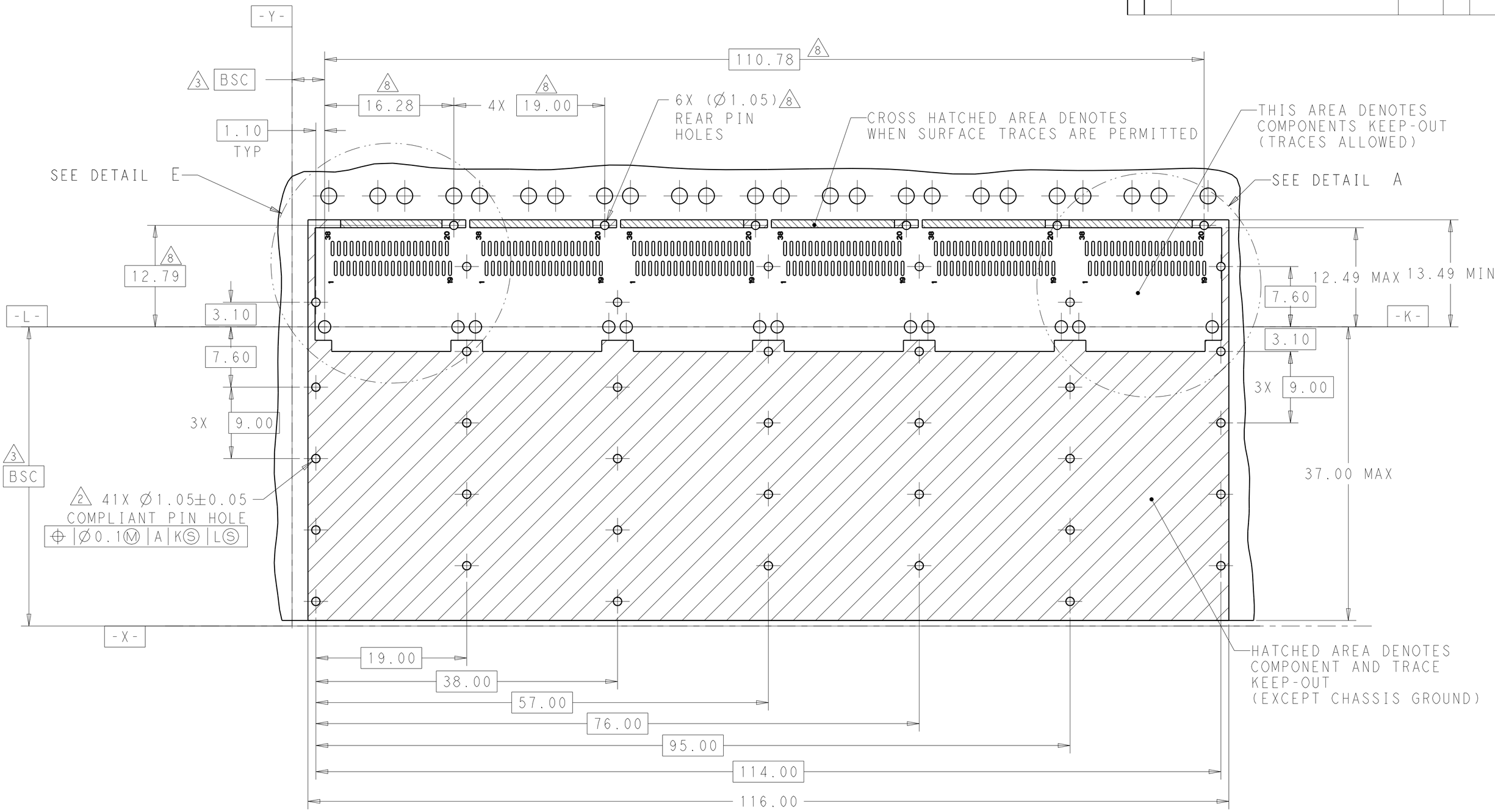

RECOMMENDED PCB LAYOUT
SINGLE TYPE
PCB TOLERANCE: ±0.05
SCALE 3:1

THIS DRAWING IS A CONTROLLED DOCUMENT.		DWN JASON YANG 24OCT2013	TE Connectivity
DIMENSIONS: mm	TOLERANCES UNLESS OTHERWISE SPECIFIED: 0 PLC ±- 1 PLC ±0.25 2 PLC ±0.2 3 PLC ±- 4 PLC ±- ANGLES ±-	CHK -	NAME CAGE ASSEMLBY, 1X6, QSFP28 WITH HEAT SINKS AND LIGHT PIPES, THRU BEZEL, GASKET
		APVD -	
		PRODUCT SPEC -	
		APPLICATION SPEC -	SIZE A2 / CAGE CODE 00779 / DRAWING NO C-2170724 / RESTRICTED TO -
MATERIAL SEE NOTES -	FINISH SEE NOTES -	WEIGHT -	Customer Drawing / SCALE 3:1 / SHEET 6 OF 9 / REV 1

THIS DRAWING IS UNPUBLISHED. RELEASED FOR PUBLICATION 20
© COPYRIGHT 20 BY - ALL RIGHTS RESERVED.

REVISIONS					
P	LTR	DESCRIPTION	DATE	DWN	APVD
	-	SEE SHEET 1	-	-	-

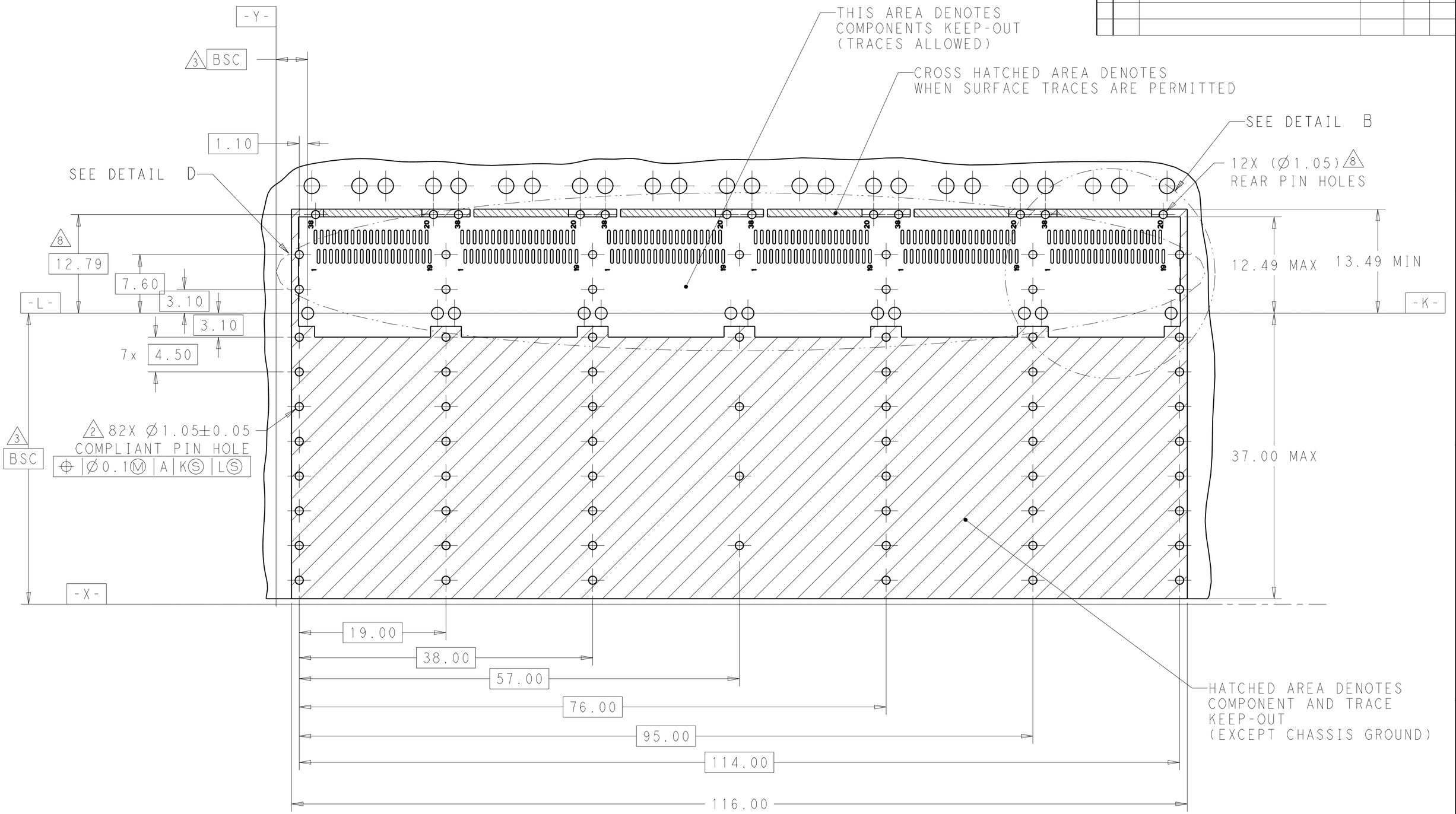

RECOMMENDED PCB LAYOUT
BELLY TO BELLY TYPE
PCB TOLERANCE: ±0.05
SCALE 3:1

PRELIMINARY PART- NOT RELEASED FOR PRODUCTION

THIS DRAWING IS A CONTROLLED DOCUMENT.		DWN JASON YANG 24OCT2013	TE Connectivity
DIMENSIONS: mm	TOLERANCES UNLESS OTHERWISE SPECIFIED: 0 PLC ±- 1 PLC ±0.25 2 PLC ±0.2 3 PLC ±- 4 PLC ±- ANGLES ±-	CHK -	NAME CAGE ASSEMLBY, 1X6, QSFP28 WITH HEAT SINKS AND LIGHT PIPES, THRU BEZEL, GASKET
		APVD -	
		PRODUCT SPEC -	
		APPLICATION SPEC -	SIZE A2 / CAGE CODE 00779 / DRAWING NO C-2170724 / RESTRICTED TO -
MATERIAL SEE NOTES -	FINISH SEE NOTES -	WEIGHT -	Customer Drawing / SCALE 3:1 / SHEET 7 OF 9 / REV 1

THIS DRAWING IS UNPUBLISHED. RELEASED FOR PUBLICATION 20
© COPYRIGHT 20 BY - ALL RIGHTS RESERVED.

REVISIONS

P	LTR	DESCRIPTION	DATE	DWN	APVD
	-	SEE SHEET 1	-	-	-

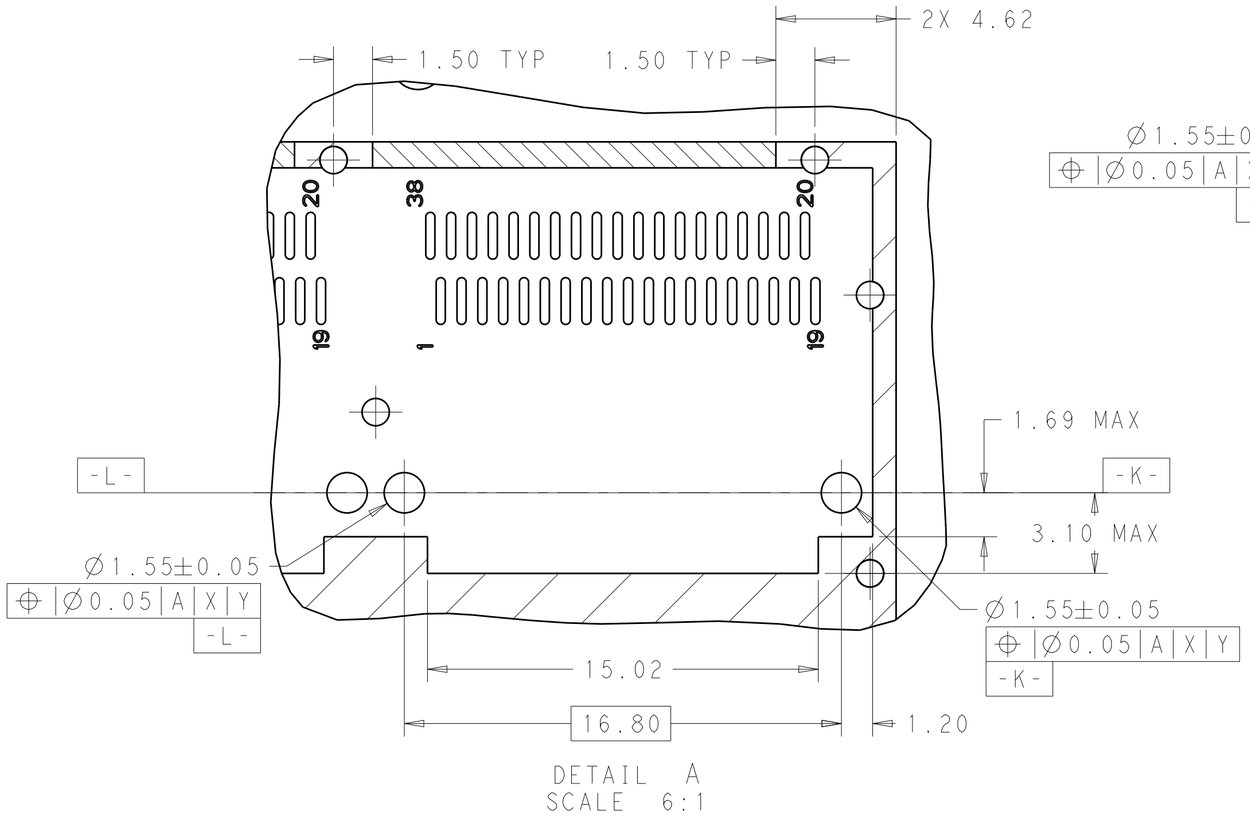

DETAIL A
SCALE 6:1

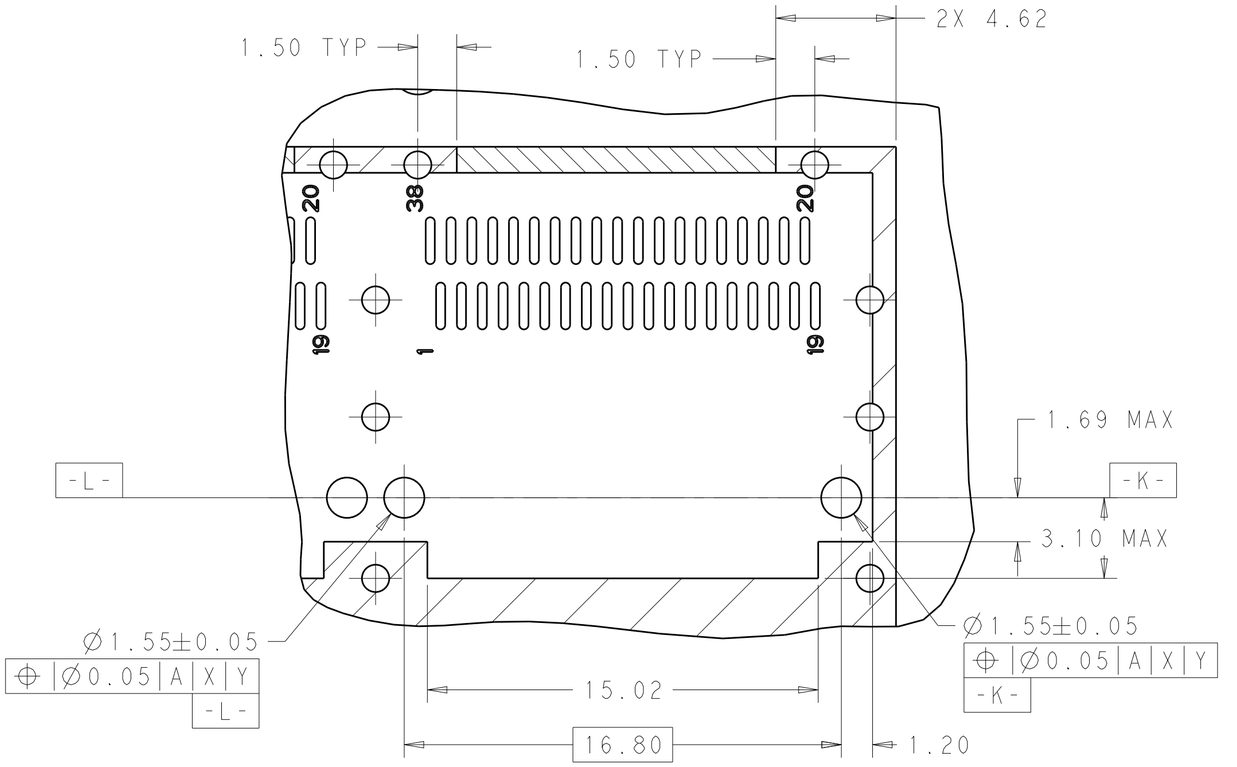

DETAIL B
SCALE 6:1

THIS DRAWING IS A CONTROLLED DOCUMENT.

DIMENSIONS: mm

TOLERANCES UNLESS OTHERWISE SPECIFIED:
0 PLC ±-
1 PLC ±0.25
2 PLC ±0.2
3 PLC ±-
4 PLC ±-
ANGLES ±-

MATERIAL SEE NOTES -

FINISH SEE NOTES -

DWN JASON YANG 24OCT2013
CHK -
APVD -
PRODUCT SPEC -
APPLICATION SPEC -
WEIGHT -

TE Connectivity

NAME CAGE ASSEMLBY, 1X6, QSFP28 WITH HEAT SINKS AND LIGHT PIPES, THRU BEZEL, GASKET

SIZE	CAGE CODE	DRAWING NO.	RESTRICTED TO
A2	00779	C-2170724	-

Customer Drawing | SCALE 3:1 | SHEET 8 OF 9 | REV 1

PRELIMINARY PART- NOT RELEASED FOR PRODUCTION

THIS DRAWING IS UNPUBLISHED. RELEASED FOR PUBLICATION 20
© COPYRIGHT 20 BY - ALL RIGHTS RESERVED.

REVISIONS

P	LTR	DESCRIPTION	DATE	DWN	APVD
	-	SEE SHEET 1	-	-	-

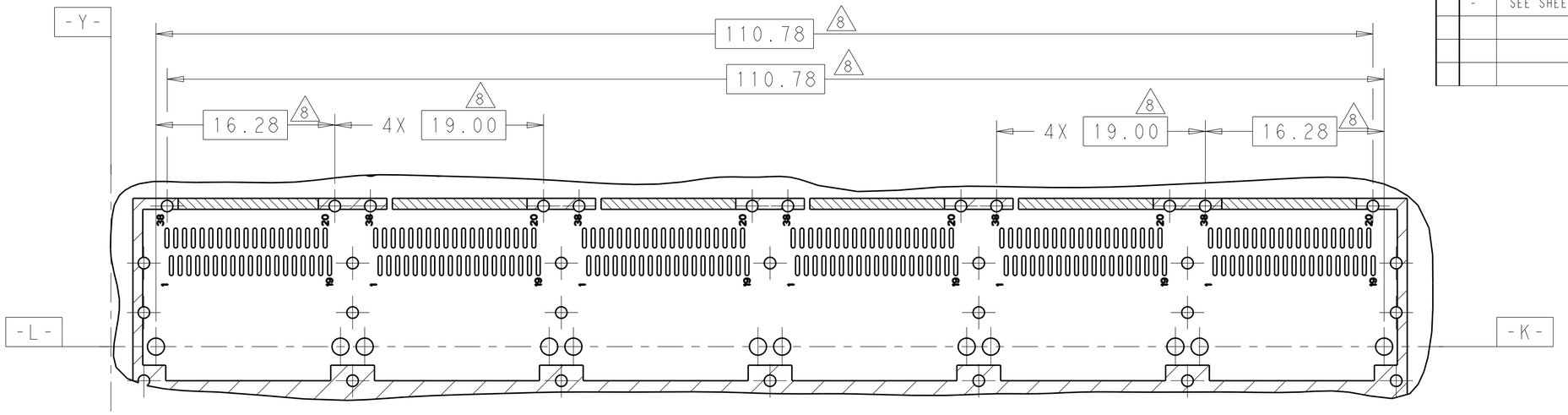

DETAIL D
SCALE 3:1

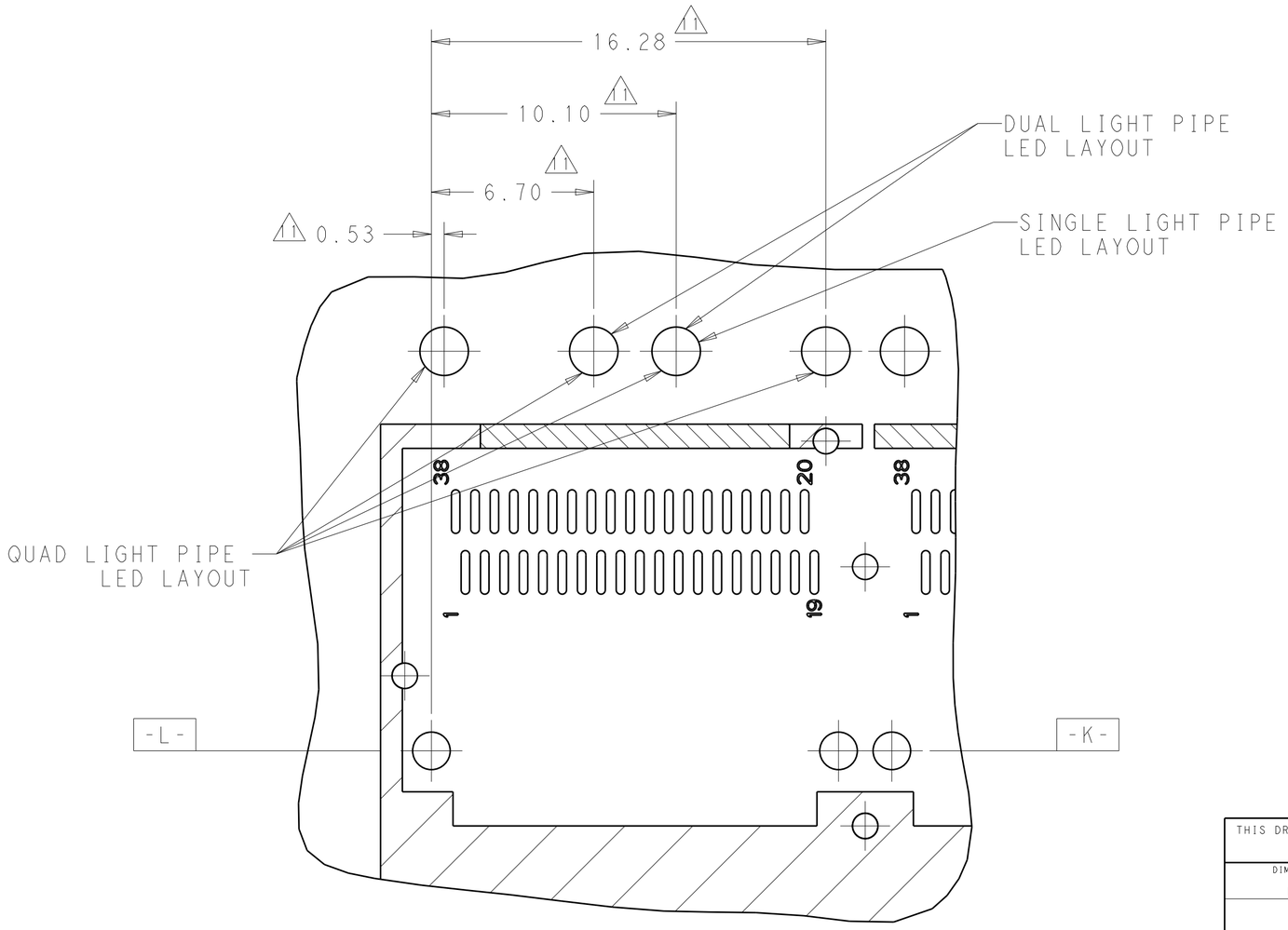

DETAIL E
SCALE 6:1

THIS DRAWING IS A CONTROLLED DOCUMENT.		DWN JASON YANG 24OCT2013	TE Connectivity
DIMENSIONS: mm	TOLERANCES UNLESS OTHERWISE SPECIFIED: 0 PLC ±- 1 PLC ±0.25 2 PLC ±0.2 3 PLC ±- 4 PLC ±- ANGLES ±-	CHK - / APVD - / PRODUCT SPEC - / APPLICATION SPEC - / WEIGHT -	NAME: CAGE ASSEMLBY, 1X6, QSFP28 WITH HEAT SINKS AND LIGHT PIPES, THRU BEZEL, GASKET
MATERIAL SEE NOTES -	FINISH SEE NOTES -	Customer Drawing	SIZE A2 / CAGE CODE 00779 / DRAWING NO C-2170724 / RESTRICTED TO - / SCALE 3:1 / SHEET 9 OF 9 / REV 1