

8511N WIRELESS VIBRATION SENSOR

Bluetooth® BLE-5

TECHNICAL SPECIFICATIONS

- Wireless Piezoelectric Single Axis Accelerometer
- Designed for Condition Monitoring
- Programmable and Customer Configurable
- Corrosion Resistant Stainless-Steel Housing
- Wide Bandwidth to >15kHz
- Exceptional Long Term Stability
- Superior Measurement Resolution
- ATEX certified
- Explosive Atmospheres Certified

FEATURES

- Compact design
- Up to 4-year battery life
- -40°C to +60°C operating temperature
- 35kHz resonant frequency
- Embedded FFT signal analysis
- Stud, magnet, or adhesive mounting accessories

APPLICATIONS

- Condition based monitoring
- Electric motors
- Oil & gas equipment
- ICE powerplants
- Pumps for liquids
- Compressors
- Factory equipment
- Robots and cobots
- Autonomous guided vehicles
- HVACR equipment

INTRODUCTION

The TE model 8511N wireless vibration sensor combines an accelerometer, a data collector, and a radio into one compact, battery-operated device that measures both vibration and temperature data. It was designed for harsh environments and comes with the ATEX certification.

The model 8511N wireless accelerometer uses the Bluetooth® BLE-5 communication protocol, offering a simple, reliable, and secure means of expanding condition-based maintenance into plant areas where the cost to install wired systems is prohibitive, making data available to existing process control and information systems. The Bluetooth® interface provides easy access to the embedded configuration settings at the sensor installation.

The model 8511N incorporates a piezo-electric accelerometer which offers a wide bandwidth to >15kHz, outstanding measurement resolution and superior long-term stability compared to design using MEMS solutions.

The 8511N contains digital signal processing capability that provides an FFT analysis of the sensed vibration. The output data describes the center frequency, peak value, bandwidth, and percent of the total spectral content for the eight most significant acceleration peaks in the vibration signal.

Because of this feature, the 8511N directly provides the data most needed to plot trends and monitor changes in the performance and condition of factory machinery.

REVISIONS

DATE	Revision	Change Description	Prepared by	Approver
12/15/2022	Rev 0.1	Initial draft NEW Version		PRS
02/07/2023	Rev 0.2	Numerous revisions and additions to BLE operations		PRS
02/13/2023	Rev 0.3	More changes to BLE details		PRS
03/13/2023	Rev 0.4	Update lower frequency limits to match 820M1 Update Ordering Information table Remove reference to Spreading Factor Add ordering info table for accessories		PRS
04/10/2023	Rev 0.5	Major rewrite and reformat of Sec 5 Add image for LED location Update regulatory information		PRS
04/24/2023	Rev 0.6	Change battery life references to 4 years Change freq response to 2 to 10kHz @ 3db Change resonant freq to 35kHz Change resolution to 14 bits Change residual noise to 9mg max Change cover mat'l from POM to PET Change Xmit power to +8dbm Change Rec sensitivity to -128±1dbm Update part number ordering table Update Regulatory certifications Update product images		
09/06/2023	Rev 0	Fixed accessory lists Updated Kit Ordering Numbers Updated TE SensorConnect app section		

REFERENCES

Other documents that may be sources of reference for material discussed in this publication:

- 8511N Technical Specification, Doc# xxxxxx
- 8511N Installation Manual, Doc# 20023687-24
- 8511N Quick Start Guide, available on TE.com

TABLE of CONTENTS

1. Performance Specifications 6
   1.1. ABSOLUTE MAXIMUM RATINGS(1) 6
   1.2. ELECTRICAL SPECIFICATION 6
   1.3. OPERATING SPECIFICATIONS (ACCEL) 6
   1.4. OPERATING SPECIFICATIONS (TEMP) 6
   1.5. ENVIRONMENTAL SPECIFICATIONS 7
   1.6. COMMUNICATION SPECIFICATIONS (BLE) 7
   1.7. COMPLIANCE INFORMATION 7
2. General Description 8
3. Device Start-Up and Normal Operation 8
   3.1. Start-up 8
   3.2. Normal Operation 8
   3.3. Available Data 9
   3.4. Features 10
   3.5. Communication 10
4. Digital Signal Processing 11
   4.1. Data Collection 11
   4.2. Data processing 13
      4.2.1. Windowing for FFT 13
      4.2.2. Continuous/live mode 14
      4.2.3. Threshold event manager 14
5. Bluetooth Low Energy Communication 15
   5.1. BLE Advertsising 15
      5.1.1. Avertising modes 16

5.1.1.1. Continuous 16
5.1.1.2. Low power continuous 17
5.1.1.3. On measurement 17
5.1.1.4. Event-triggered 18
5.1.1.5. Mute mode 19
5.1.2. Advertising message format 20
5.1.2.1. Flags 20
5.1.2.2. Manufacturer specific data 20
5.2. BLE Scan response 21
5.2.1. Scan response message format 21
5.2.1.1. Complete local name 22
5.3. BLE Connected 23
5.3.1. List of service and characteristic available 23
5.4. Data format 25
5.4.1. General 25
5.4.1.1. Battery 25
5.4.1.2. Temperature 25
5.4.1.3. Device status 26
5.4.2. Data Collection 26
5.4.2.1. Measurement Counter 26
5.4.2.2. Measurement interval 26
5.4.2.3. Trig mode 27
5.4.3. Data processing 28
5.4.3.1. FFT information 28
5.4.3.2. Windowing 29
5.4.3.3. Windowing FFT compensation factor 29
5.4.4. Vibration data 30
5.4.4.1. Frequency domain acceleration, Time domain acceleration, Datalog time domain values 30
5.4.4.2. Basic Statistics time domain 31
5.4.5. Threshold 31
5.4.5.1. Threshold config 31
5.4.5.2. Threshold level 32

5.4.6. Datalog 32
5.4.6.1. Datalog configuration 32
5.4.6.2. Datalog values 33
5.4.7. Live mode 33
5.4.7.1. Live mode measurement interval 33
5.4.7.2. Live mode configuration 33
5.4.8. Bluetooth 34
5.4.8.1. Advertising configuration 34
5.4.8.2. Customer specific data 34
5.4.9. Generic Access 35
5.4.9.1. Device name 35
5.4.9.2. Appearance 35
5.4.9.3. Peripheral Preferred Connection Parameters 35
5.4.9.4. Central address resolution 35
5.4.10. Device Information 35
5.4.10.1. Model Number 35
5.4.10.2. Serial Number 35
5.4.10.3. Firmware revision 35
5.4.10.4. Hardware revision 35
5.4.10.5. Manufacturer 35
5.4.11. Generic attribute 35
5.4.11.1. Service change 35
5.4.12. Secure DFU Service 35
5.4.12.1. Buttonless DFU without bond 35
6. Magnetic Switch and LED 37
6.1. Magnetic Switch 37
6.2. LED Indicator 38
7. Battery 39
7.1. BATTERY TYPE 39
7.2. BATTERY LIFE 39
7.3. BATTERY REPLACEMENT 40
8. Dimensions 40
9. Mounting Considerations & Accessories 41

10. Regulatory Statements 43
11. Intrinsic Safety Models 44
12. Ordering Information 45
13. Additional Notes: 46

1. Performance Specifications

1.1. ABSOLUTE MAXIMUM RATINGS(1)

Parameter		Symbol	Min	Typ	Max	Unit	Notes/Conditions
Supply voltage		V_{dd}			3.6	V	Replaceable battery
Storage temperature		T_S	-40		80	°C	Without battery
Shock limit		g_{max}			2000	g	1Hz to 10kHz
ESD			-2		+2	kV	Human body model

(1) Maximum limits the device will withstand without damage

1.2. ELECTRICAL SPECIFICATION

(Unless otherwise specified, all parameters are measured at 25°C @ 3.0V applied)

Parameters	Symbol	Min	Typ	Max	Unit	Notes/Conditions
Power Supply	V_{dd}		3		Vdc	Replaceable Battery SAFT17330
Average supply current	I_{avg}		35		µA	
Peak supply current	I_{pk}			50	mA	During Xmit (LoRa)
Resolution				14	bits	
Sampling Time				5	Sec	
Battery Life			4		Years	One sample/hr (SF7)

1.3. OPERATING SPECIFICATIONS (ACCEL)

(Unless otherwise specified, all parameters are measured at 25°C @ 3.0V applied)

Parameter	Symbol	Min	Typ	Max	Unit	Notes/Conditions
Dynamic range			±25		g	Z axis
Frequency response		2		10k	Hz	±3db
Resonant frequency	f_o	30			kHz	
Transverse sensitivity			5		%	
Temperature sensitivity	T_c	-10		5	%	From -20 to 60°C
Non-linearity			±1		%	FSO
Resolution			14		bits	
Residual noise				9	mg	RMS
Sensitive axis		Single bidirectional axis perpendicular to the mounting surface				

1.4. OPERATING SPECIFICATIONS (TEMP)

Unless otherwise specified, all parameters are measured at 25°C @ 3.0V applied)

Parameter	Symbol	Min	Typ	Max	Unit	Notes/Conditions
Temp measurement range	T_r	-40		80	°C	
Accuracy			±2.0		°C	-30 to +60ºC
Resolution			12		bits	

(1)The temperature sensor is located inside the sensor enclosure. As such, it provides the temperature of the sensor interior, not the ambient temperature around the sensor, nor the temperature of surface to which the sensor is mounted.

1.5. ENVIRONMENTAL SPECIFICATIONS

Parameter	Symbol	Min	Typ	Max	Unit	Notes/Conditions
Operating temperature		-40		+60	°C	With battery
Storage temperature		-40		+80	°C	Without battery
Ambient humidity		0		95	%	Non-condensing
EMI/RFI/ESD protection			IEC61000-4-2, ICE61000-4-6			
Ingress protection	IP		IP66/IP67			
Media compatibility			External exposed surfaces: 316L stainless steel PET polymer EPDM o-ring			
Weight			200		grams	

1.6. COMMUNICATION SPECIFICATIONS (BLE)

Parameter	Symbol	Min	Typ	Max	Unit	Notes/Conditions
Wireless protocol			BLE 5.0			
Operating freq			2.4		GHz	
Transmit power			0		dBm	
Receiver sensitivity		-127		-129	dBm	
Advertising interval			1		sec	Factory default

1.7. COMPLIANCE INFORMATION

Compliance Type	Region
Bluetooth Signal Compliance	All
FCC Certified	United States
ISED Certified	Canada
RED Compliance	Europe (EU)
RoHS Compliance	
Explosive Atmospheres Certifications	United States, Canada, ATEX, IECEx

See Ordering Information for applicable codes

2. General Description

The 8511N is a single axis accelerometer suitable for real-time data collection, analysis, and storage of vibration and temperature data. The system utilizes BLE communication protocols to wirelessly transmit data to a host device for further analysis and interpretation.

In addition, the system features a user-configurable threshold that triggers an event when a predetermined level of acceleration is exceeded. This feature can be used to detect potential problems in machinery such as excessive vibration, and alert maintenance personnel.

The system also features a datalogger function that can store up to 4096 acceleration data samples. Data can be taken and stored in response to user selected trigger events. These can be a regular measurement interval, or when a particular threshold is reached, or even on the rising edge of the threshold.

In summary, the TE model 8511N wireless vibration sensor provides a comprehensive solution for vibration monitoring in harsh industrial environments. With its high-performance accelerometer, powerful microprocessor, and configurable software, it offers the flexibility and functionality needed to meet the needs of a wide range of applications.

3. Device Start-Up and Normal Operation

3.1. Start-up

1) Insert battery (refer to Installation Manual – Doc #20023687-24). On-board LED will flash once upon proper installation.
2) The sensor will begin BLE advertising at the rate of once per second for 60 minutes. During this period the sensor will make a measurement at the measurement interval.
3) During the initial 60-minute advertising, the user can respond and establish the BLE “Connected” mode. While in Connected mode, the user can configure all sensor variables such as measurement interval, transmit interval and FFT features.
4) At 60 minutes after start-up, the BLE operation reverts to normal advertising mode.

3.2. Normal Operation

The sensor operation is based on the scheduler or measurement timer. At the user-defined interval, the sensor collects a measurement of both acceleration and temperature data. The collected data is then processed by the sensor’s embedded microprocessor and the advertising packets are updated with the new values. These updated packets are then transmitted via

Bluetooth Low Energy (BLE) in either advertisement mode or connected mode. In advertisement mode, the sensor continuously transmits basic data such as status, temperature, and acceleration values. In connected mode, the sensor maintains a connection with a master device, allowing for advanced configuration and additional data reading.

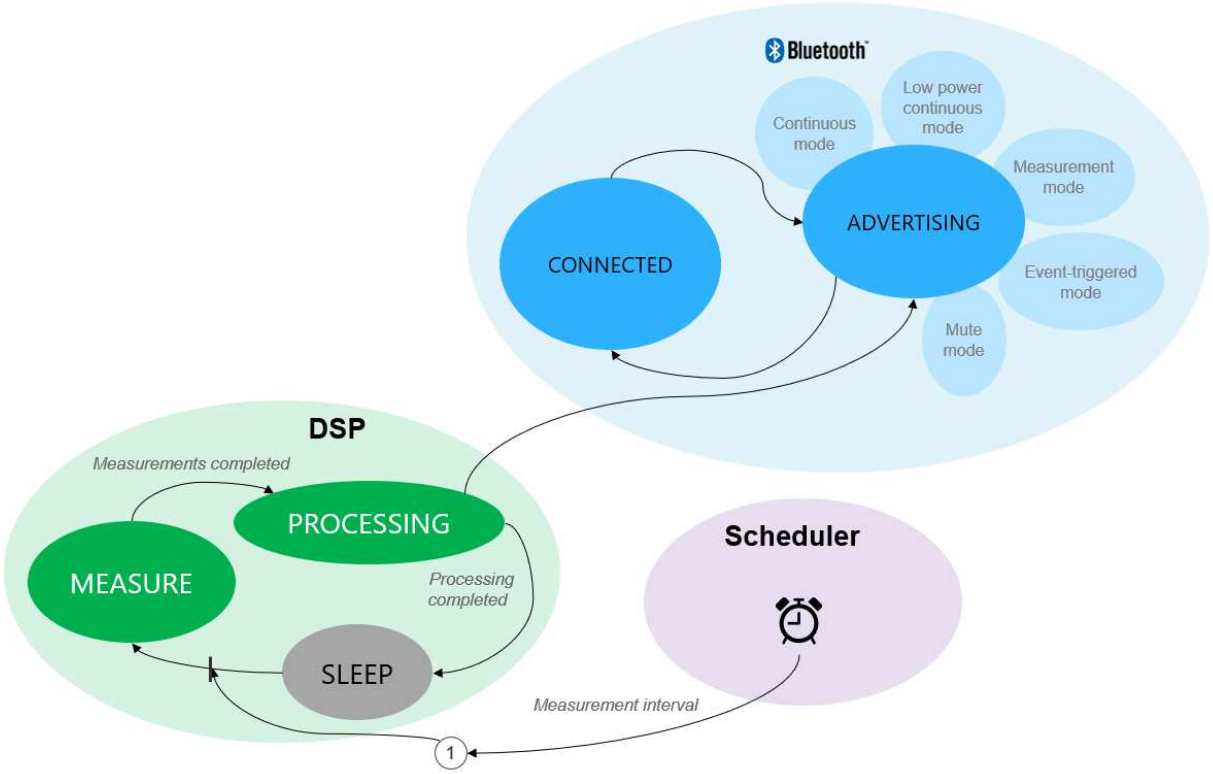

3.3. Available Data

The device computes sensor readings in a smart way and provides:

- Peak to peak value from time domain acceleration data (advertisement data, connected mode)
- Full signal power (gRMS) from time domain acceleration data (advertisement data, connected mode)
- Frequency domain acceleration data (available in connected mode only)
- Time domain acceleration data (available in connected mode)
- Temperature

3.4. Features

The sensor offers advanced features:

- Threshold: When the acceleration, measured either as the root mean square (RMS) or peak-to-peak, exceeds or falls below a specified threshold level, a flag is raised. See Threshold section.
- Data Logger: enables the user to store a 4096-acceleration buffer upon the occurrence of a specific event, such as at the measurement interval, when a threshold is reached, or on the rising edge of the threshold. See Data Logger section.
- Live mode: When connected mode is activated, user can get access to a live mode. It will acquire data continuously and provide all data to display it in “real time”. See Live Mode section.

3.5. Communication

The sensor supports two Bluetooth Low Energy (BLE) modes:

- Advertisement Mode - allows it to periodically broadcast its presence and basic data (status, temperature, acceleration) to nearby devices such as smartphones or other BLE enabled devices without establishing a direct connection. This mode is used for discovery and initial communication with the sensor and is suitable for use cases that require low-power, short-range data transfer. This is a low-power and low-bandwidth mode that is ideal for use cases that do not require a constant real-time connection to the sensor. By broadcasting its presence and basic data, the sensor makes itself discoverable to other devices, allowing for easy and quick setup of a direct connection if desired. The data in the advertising packets does not change frequently and is meant to provide a basic overview of the sensor’s current state. The sensor supports multiple advertising modes that allow for different types of communication between the sensor and a BLE enabled device. These modes allow for a flexible configuration of the sensor’s communication capabilities to match different use cases and power requirements. The modes are designed to offer a trade-off between low power consumption, fast response times, and the amount of data transmitted. Some common advertising modes include low power continuous, event-triggered, and measurement modes. The availability of different modes and the way they work can be found in the product documentation.
  Note that the same packet is sent multiple times, so receiving one packet does not necessarily mean that new data has been received.
- Connected Mode - provides access to more features and functionality compared to advertisement mode. This mode allows the user to configure the sensor, read additional data, and perform more complex operations such as data processing, real-

time monitoring, and data logging. The user can also retrieve historical data and set thresholds for triggering events. Overall, connected mode offers a more in-depth and comprehensive experience compared to advertisement mode, and is ideal for applications that require detailed analysis and monitoring of vibration and temperature data.
To enter Connected Mode, the user must initiate a connection through an advertisement sent by the sensor.

4. Digital Signal Processing

The digital signal processing involves collecting acceleration data from the sensing element at a configurable rate (refer to Data Collection) and processing it to provide human-readable information (refer to Data Processing).

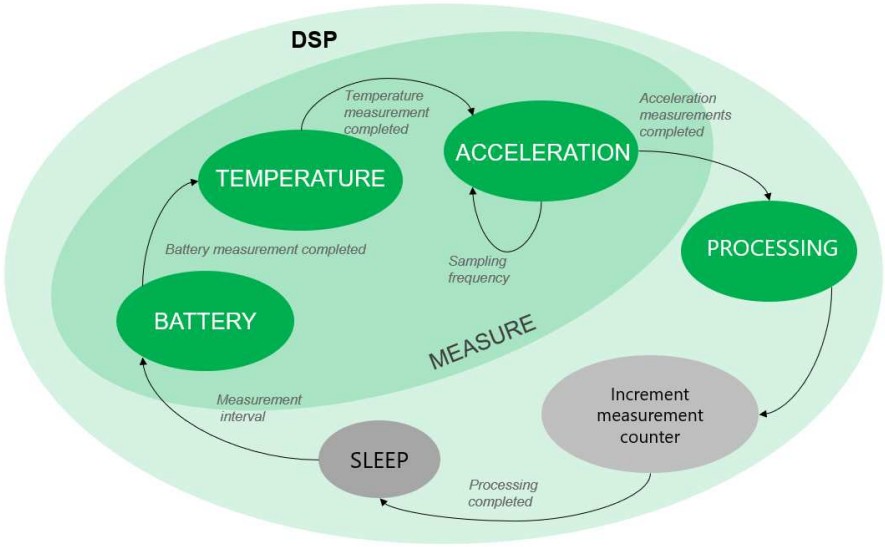

4.1. Data Collection

8511N acquires analog data from the acceleration sensor in the device. The acquisition chain consists of these elements:

- Multiplexer: Manages the data from the acceleration sensor and temperature sensor.
- Anti-aliasing filter: Removes bias and aliasing.
- Analog to digital converter: 14bit resolution with an acquisition frequency up to 1MSPS.
- DC cancellation: Corrects for the DC bias applied to the sensing element.
- Gain stage: Provides calibration compensation.

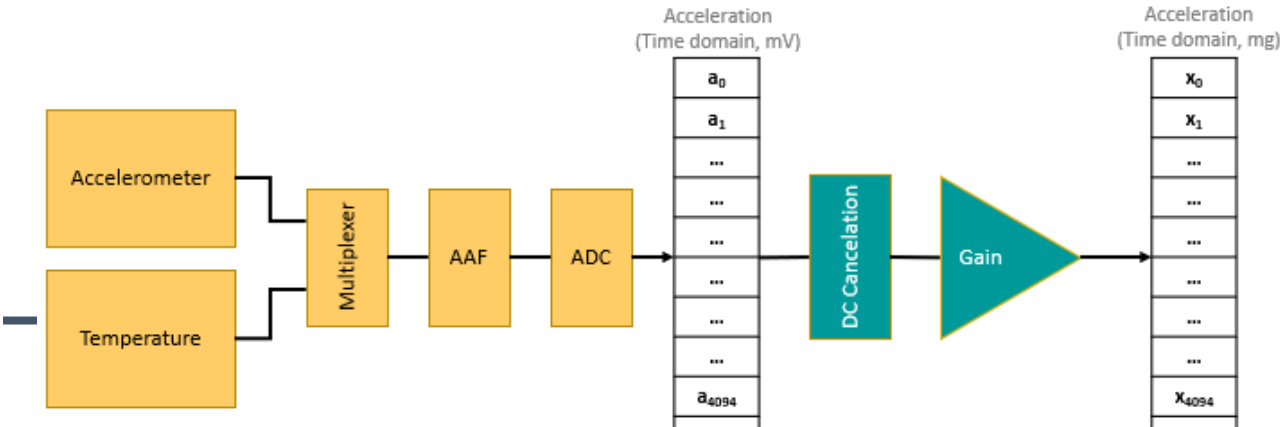

When the system requests a data measurement, the sensor acquires 4096 data points at the required bandwidth. The information below shows the relationship between sampling frequency, bandwidth, and acquisition duration (warm-up and processing times are not included):

Sampling Frequency (Hz)	Bandwidth (Hz)	Acquisition duration (s)
512	200	8
1024	400	4
2048	800	2
4096	1600	1
8192	3200	0.5
12288	4800	0.333333
16384	6400	0.25
20480	8000	0.2
24576	9600	0.166667
28672	11200	0.142857
32768	12800	0.125
36864	14400	0.111111
40960	16000	0.1
45056	17600	0.090909
49152	19200	0.083333
53248	20800	0.076923

4.2. Data processing

Data processing is a digital signal processing technique that converts a time-domain signal into a frequency-domain signal. The process involves anti-aliasing filtering, analog-to-digital conversion, DC offset cancellation, windowing, FFT processing, and normalization of the output.

The sensor provides both time-domain and frequency-domain data as output. In the time-domain, the sensor provides the raw data along with some statistical measures such as signal power (RMS), peak to peak (P2P), standard deviation (STD), mid-range (Mid-R), and average (Average).

In the frequency domain, the sensor provides FFT data, which is the frequency-domain representation of the raw data.

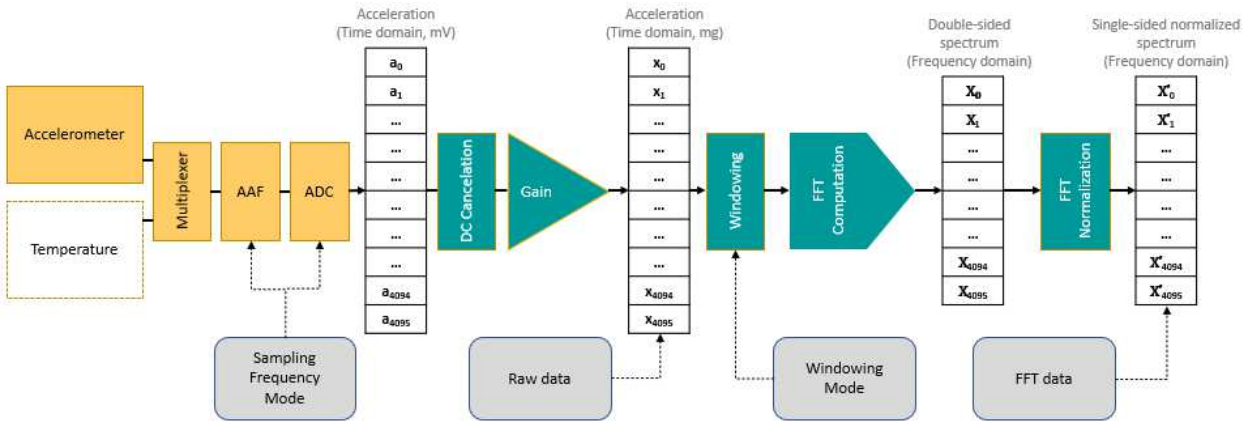

4.2.1. Windowing for FFT

The FFT computation allows the user to select one of three windowing options:

- Hann Window
- Flat-Top Window (wider frquency range than Hann)
- Rectangular or Uniform Window (same as no window)

This will spectrally distribute the potential leakage coming from the data collection. This operation multiplies the input time domain buffer (acceleration data) by the selected window function.

After having applied the windowing, the time domain values are turned into frequency domain values using an embedded FFT computation. The user defines the bandwidth parameter depending on his application. This gives the maximal observable frequency of the 8511. It's recommended to select the most appropriate value within a range of 200Hz to 20.8kHz (see table on page 12).

4.2.2. Continuous/live mode

When BLE connected mode is activated, user can get access to a live mode. It will acquire data continuously and provide all data to display it in nearly "real time". The data will be taken from the most recent reading.

4.2.3. Threshold event manager

This feature allows the user to create an event or notification when a reading exceeds or passes a pre-selected threshold. Note that this is not "continuous on" monitoring. The value is updated only on measurement interval.

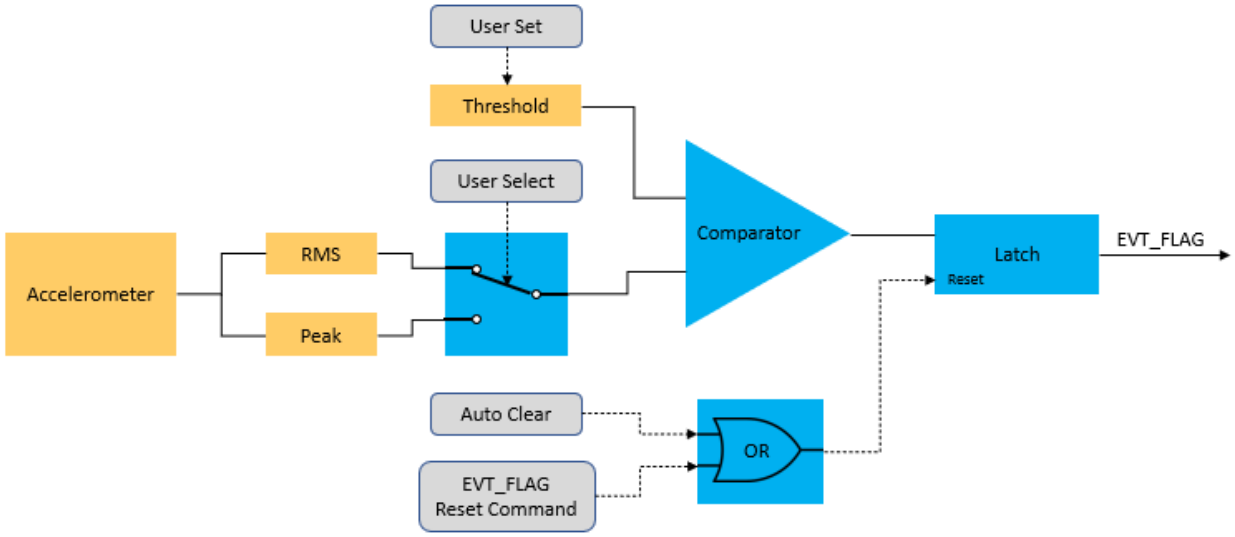

Threshold manager bloc diagram

At configuration the user must define:

- Signal format to be used (Signal Power RMS or Peak to Peak value)
- Threshold (Value higher or lower)
- Action to be taken after threshold event (set flag, change sample frequency…)

Every new acquired value is compared to a threshold. On threshold the sensor will do a specific action and behavior define by user:

- Set a flag
- Change BLE Advertisement interval (only on event mode activated)
- Log data into memory (only on event mode activated)

5. Bluetooth Low Energy Communication

The device includes a Bluetooth 5.0 Low Energy compliant interface. This is a low power communication technology which should be used over short distances. It makes the 8511 a connectable sensor which acts as a peripheral by default and switches to a server role once a remote device (central) is connected.

The sensor supports three Bluetooth Low Energy (BLE) modes:

- Advertisement Mode: mode allows it to periodically broadcast its presence and basic data to nearby devices (Status, temperature, acceleration)
- Scan Response
- Connected Mode: user has access to more features and functionality compared to advertisement mode.

5.1. BLE Advertising

This mode allows the sensor to periodically broadcast its presence and basic data to nearby devices (Status, temperature, acceleration), such as smartphones or other sensors, without establishing a direct connection. This mode is used for discovery and initial communication with the sensor and is suitable for use cases that require low-power, short-range data transfer. Advertisement Mode is a low-power and low-bandwidth mode that is ideal for use cases that do not require a constant, real-time connection to the sensor. By broadcasting its presence and basic data, the sensor makes itself discoverable to other devices, allowing for easy and quick setup of a direct connection if desired. The data in the advertising packets does not change frequently and is meant to provide a basic overview of the sensor's current state.
Note that the same packet is sent multiple times, so receiving one packet does not necessarily mean that new data has been received.

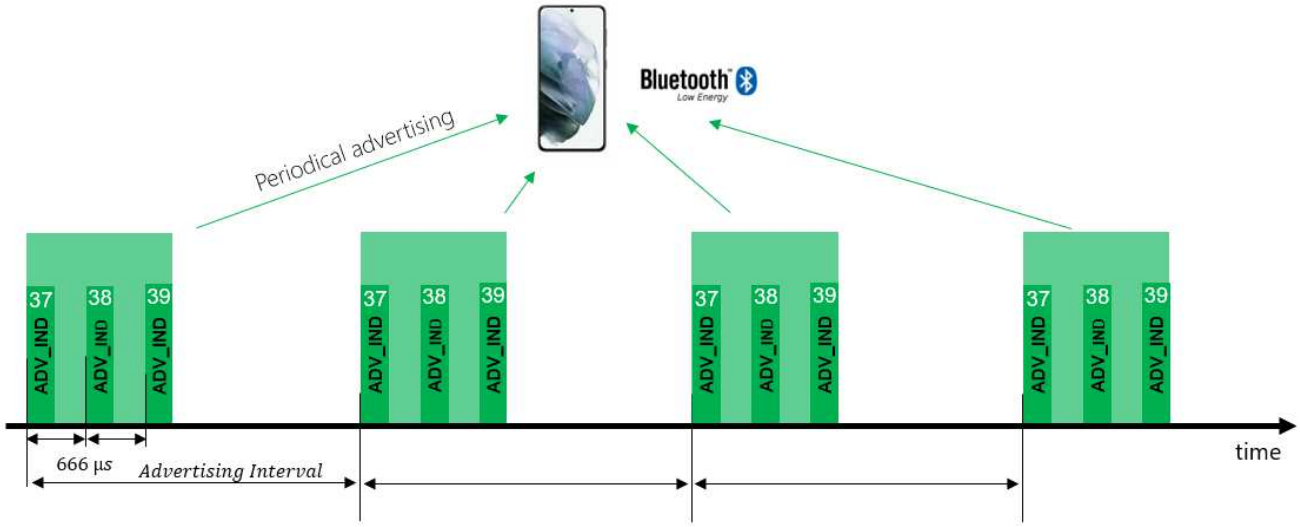

According to the Bluetooth Low Energy (BLE) standard, advertising packets are sent on three BLE channels (37,38,39) to ensure reliable and efficient transmission. This allows for multiple devices to advertise simultaneously without interfering with each other. The three channels are designed to be spaced apart to minimize overlap and prevent interference. The use of three channels helps to ensure that a device's advertising packets are received by potential connections, even if conditions are not ideal.

5.1.1. Avertising modes

The TE 8511 wireless vibration sensor offers three modes of Bluetooth Low Energy (BLE) advertising: low power mode, responsiveness mode, and event-based mode. These modes can be configured to meet the specific requirements of the user and their application, allowing for a balance between battery life and the need for real-time data transmission. The choice of advertising mode will depend on the user's needs for power conservation and data accessibility.

- **Continuous**: this mode is not selectable. It only operates during the sensor initialization phase.
- **Low power continuous**: is the default mode, allowing for possible connections immediately after a measurement and advertising data at a lower rate while idle.
- **On measurement**: In this mode, the sensor advertises only upon the measurement interval, i.e., when new measurement data is available.
- **Event-triggered**: advertises new data when a specific event occurs.
- **Mute:** temporarily stops transmission until next measurement.

Event-triggered mode: for those who require real-time data transfer but need to conserve battery life, and only advertise data when an event occurs.

5.1.1.1. Continuous

In Continuous Mode, the advertisement interval is set to 1 second. This means that the sensor will continuously advertise the latest measurement data at 1-second intervals. This mode is not selectable and is only operational during the sensor initialization phase, which lasts for 1 hour after the device is powered on or reset. During this phase, the device is set to continuously advertise to ease the connection process and provide the user with an opportunity to switch to Connected Mode for configuration purposes. The measurement interval, or the time between consecutive measurements, is independent of the advertisement interval and is set separately.

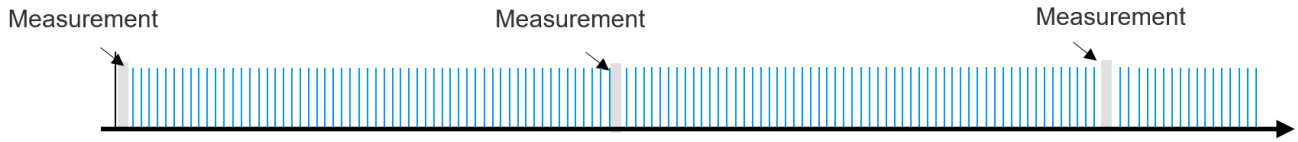

5.1.1.2. Low power continuous

In Low power continuous mode, the device sends 15 advertising packets with a 1 second interval after every measurement interval. Then, it continues to send packets at a rate of every 10 seconds. This allows the user to receive updated information at a relatively frequent rate while still conserving battery power. The interval between the measurements is determined by the measurement timer, which can be configured by the user. The Low Power Continuous mode provides a balance between power efficiency and real-time information updates.

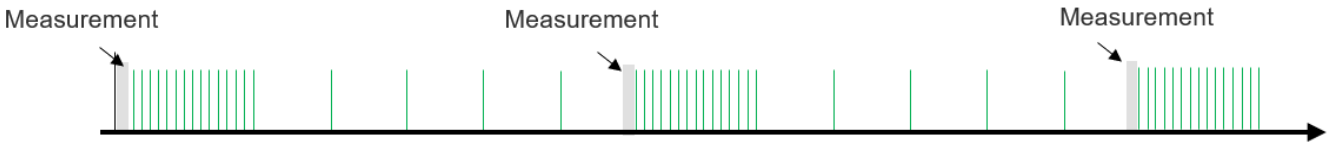

5.1.1.3. On measurement

In the On Measurement mode, the sensor sends 15 packets at a 1-second interval with the latest measurement data after each measurement. This mode allows the user to receive updated information about the measurement at a regular interval. The frequency of the measurement (Measurement Interval) can be configured by the user to fit their specific needs. The purpose of sending multiple packets is to ensure reliable communication, as some packets may be lost during transmission.

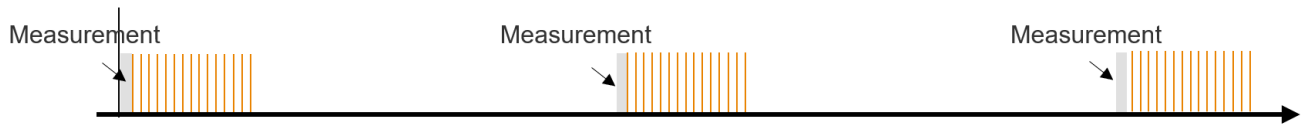

5.1.1.4. Event-triggered

in Event-triggered mode, the sensor sends a burst of 15 advertising packets at a 1 second interval, regardless of whether an event has been triggered or not. Then, after the burst, the sensor will send 1 packet every 10 seconds while the event flag (EVT_FLAG) is set. The event flag can be cleared by the user at any time in connected mode. This can provide an opportunity for the user to connect to the sensor and read data when an event has been triggered, allowing for timely and efficient data collection.

Auto-clear

The first way to stop the 10-sec advertising is to use the auto clear feature which automatically stops advertising when a measurement is taken that does not meet the set threshold condition. Both ways ensure that the sensor only advertises when necessary, preserving battery life and minimizing unnecessary data transmission. The drawback with the auto-clear feature is that packets are still sent at 10 second intervals until the next measurement.

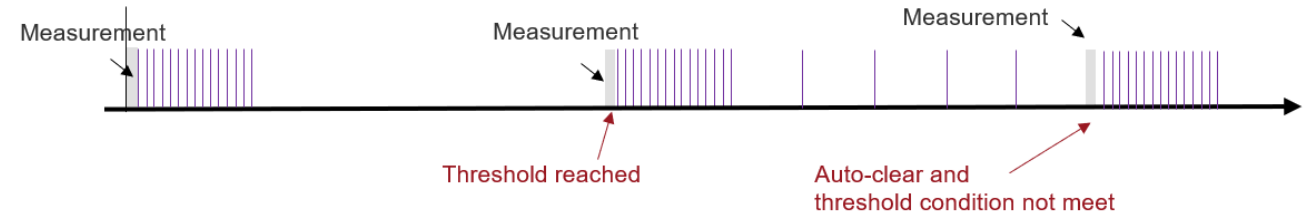

User clear

The second way to stop the 10-sec advertising is to connect to the sensor and manually clear the EVT_FLAG through the appropriate command or interface. User clear can be used in both modes: Latch or Auto-Clear.

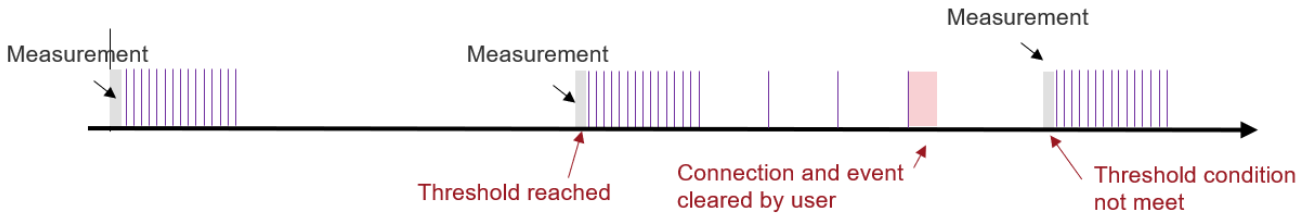

Event latch or Condition meet

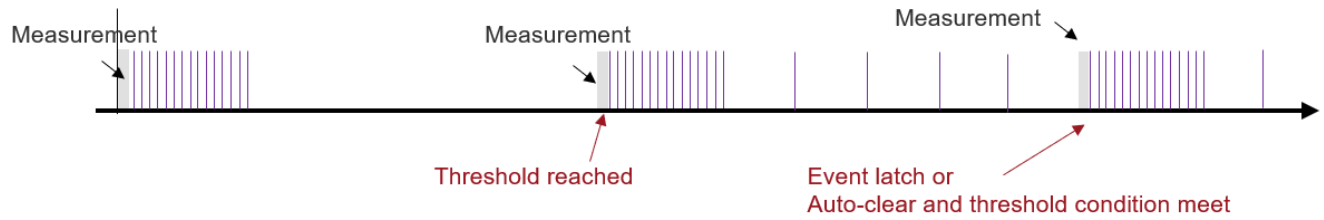

5.1.1.5. Mute mode

The feature “Mute” allows users to temporarily stop the Bluetooth Low Energy (BLE) advertising until the next measurement or the next event if using “Event-triggered” mode. This is achieved by using the ADV_MUTE field in connected mode. By setting this field, the sensor will stop transmitting any advertising packets until the next measurement is taken, making it ideal for users who want to temporarily stop broadcasting information. This feature can be used in any advertising mode (recommended to be used in Continuous or Low Power Continuous), offering users greater flexibility and control over the sensor’s behavior.

Continuous mode

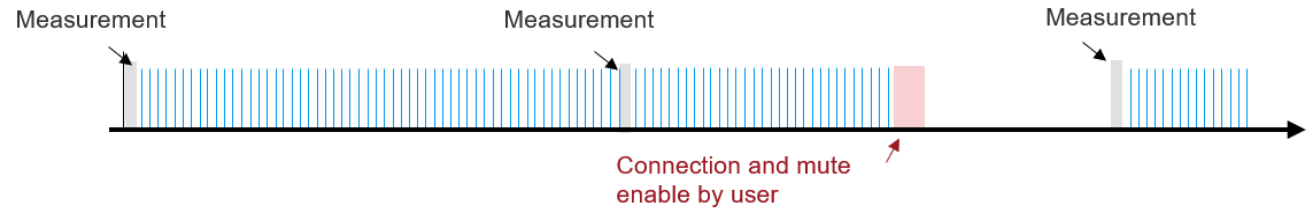

Low Power Continuous mode

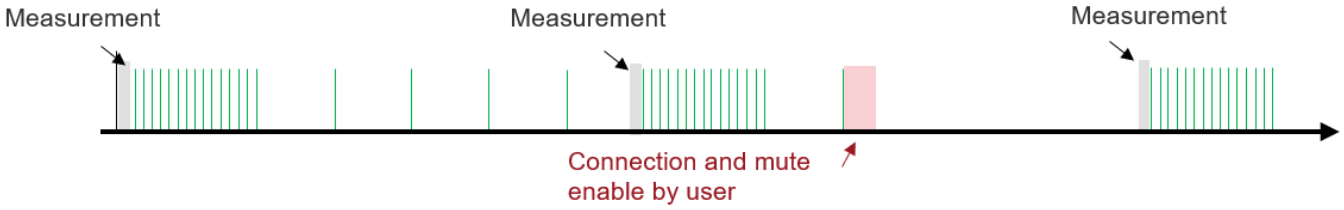

5.1.2. Advertising message format

The sensor uses ADV_IND stands for “Advertising Indication”. It is a type of Bluetooth Low Energy (BLE) advertising message used for device discovery. The ADV_IND message contains information about the device, such as device type, and it is broadcast by the device and can be detected by nearby BLE capable devices.
The Advertising message format for the 8511 sensor consists of two main components:

- **Flags**: standard field that is included in all Bluetooth Low Energy (BLE) advertisement packets. It provides information about the device and the type of data being advertised.
- **Manufacturer Specific Data**: specific to the vibration sensor and provides details about the device’s status and sensor readings. The data fields in this component are arranged in a specific order, determined by the manufacturer of the sensor. This component allows the end-user to access more detailed information about the device’s readings and status, beyond what is provided in the Flags component.

Byte	0	1	2	3	4	5	…	22
Field	Length	Type	Value	Length	Type	Value		
Default	02	0x01	Flags	0x13	0xFF	Manufacturer Specific Data		

Example of advertising data: 0x020106 13 ff de08ffffffffffffc95300006400e4044200

5.1.2.1. Flags

The advertising packet contains the following flags:

- LE General Discovery Mode
- Br/Edr Not Supported
- Le Only Limited Discovery Mode
- Le Only General Discovery Mode

5.1.2.2. Manufacturer specific data

All data fields are formatted in a specific way. The manufacturer-specific data may vary depending on whether it is a single-axis or tri-axis vibration sensor.

8511 product (1 axis)

Advertising 8511 manufacturer specific data																		
byte	0	1	2	3	4	5	6	7	8	9	10	11	12	13	14	15	16	17
field	CI		DEVTYPE		CSD				CNT		DEV STAT	BATT	TEMP		X_RMS		X_P2P	

- CI: Company identifier, 0xDE08.
- DEVTYPE: device type sets 0xD2C1
- CSD: Customer specific data, user writable 4-byte array
- CNT: measurement counter
- DEVSTAT: device status. See Device status

- BATT: battery level. See Battery
- TEMP: sensor contact temperature. See Temperature
- x_RMS: rms acceleration/velocity in mg
- x_P2P: peak to peak acceleration /velocity in cg

5.2. BLE Scan response

The 8511 supports active scanning requests. This can be used to ask for more information about the sensor. Scan Response is a message exchanged between two Bluetooth Low Energy (BLE) devices during the process of device discovery. It is a response to a Scan Request sent by a scanning device. The Scan Response contains additional information about the advertising device.

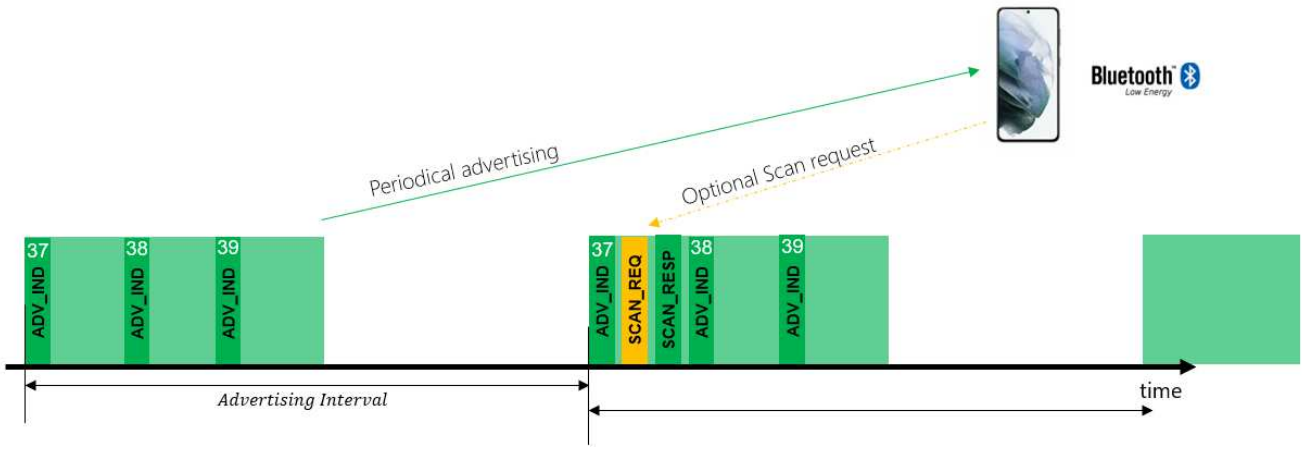

5.2.1. Scan response message format

It provides the Complete Local Name (Device Name).

Byte	0	1	2	…
Field	Length	Type	Value	
Default	Varies	0x09	Complete local name	

5.2.1.1. Complete local name

Contains the name of the sensor in ASCII. It refers to “” (see Device name)

5.3. BLE Connected

Users have access to more features and functionality compared to advertisement mode. This mode allows the user to configure the sensor, read additional data, and perform more complex operations such as data processing, real-time monitoring, and data logging. The user can also retrieve historical data and set thresholds for triggering events. Overall, connected mode offers a more in-depth and comprehensive experience compared to advertisement mode, and is ideal for applications that require detailed analysis and monitoring of vibration and temperature data.
In order to enter Connected Mode, the user must initiate a connection through an advertisement sent by the sensor. If a device is connected to the sensor, the advertising stops until disconnection.

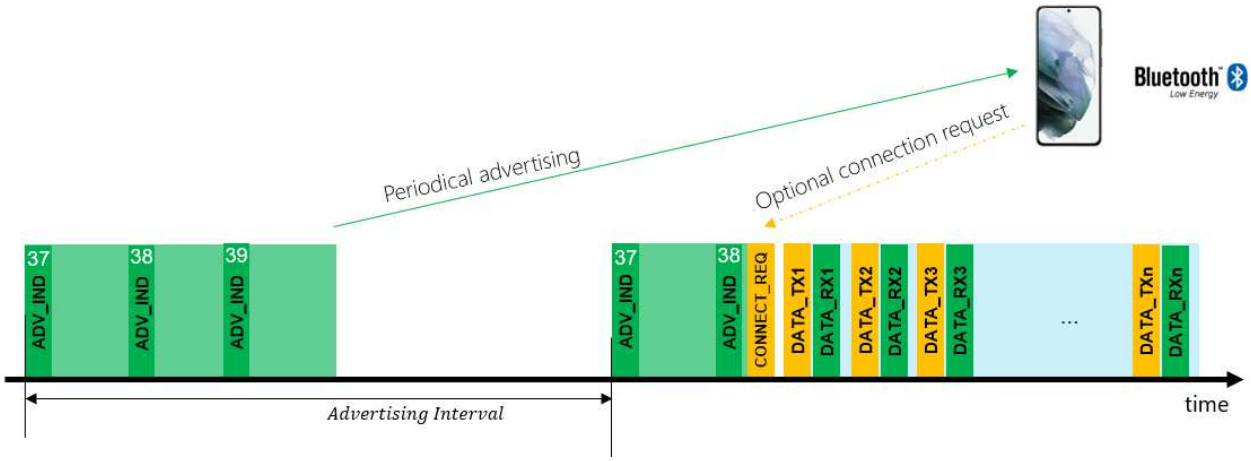

Once a connection has been established between a BLE device and a central device, the central device can discover the available services and characteristics offered by the BLE device. This is done by sending a request to the BLE device to enumerate the available services and characteristics. The BLE device will then respond with a list of all its available services and characteristics. The central device can then use the information to interact with the BLE device and read, write, or subscribe to the characteristic values. The UUIDs of the services and characteristics determine their unique identity and allow the central device to identify which service or characteristic it wants to access.

5.3.1. List of service and characteristic available

Services and characteristics are the fundamental building blocks of the Bluetooth Low Energy (BLE) protocol, used to communicate with the sensor.
Services are collections of related characteristics that provide a certain function or set of functions. For example, the Device Information Service provides information about the sensor, such as its manufacturer and firmware version.
Characteristics are individual values that represent a specific aspect of the sensor's state or configuration. For example, the Time domain acceleration characteristic provides the raw acceleration data from the sensor.

Each service and characteristic are identified by a unique Universal Unique Identifier (UUID), which is used to reference the characteristic when communicating with the sensor.

The 8511 supports two kinds of UUID:

- 16-bit UUIDs are standard UUIDs defined by the Bluetooth SIG.
- 128-bit UUIDs have a standard format, which is represented as "B614XXXX-B14A-40A6-B63F-0166F7868E13". The 16-bit UUIDs are represented by a 4-digit hexadecimal number, such as "XXXX".

16-bit standard UUID are underlined in the table below.

Services	UUID Service Key	Characteristics	UUID Characteristics Key	Read/Write Noti/Ind	Payload length (bytes)
Device status	FC00	Device status	FC03	R/N	1
Data collection	B300	Measurement Counter	B301	R/W/N	2
		Measurement interval	B302	R/W	2
		Trig mode	B303	W	1
Live Mode	B400	Live mode measurement interval	B401	R/W	1
		Live mode configuration	B402	R/W	1
Vibration Digital Signal Processing	B000	FFT information	B00A	R/W	1
		Windowing	B00B	R/W	1
		Windowing FFT compensation factor	B00C	R	8
Battery	180F	Battery	2A19	R/W/N	1
Environmental sensing	181A	Temperature	2A6E	R/N	2
Vibration data	C200	Frequency domain acceleration	C201	R/W/N	(4+2*n) 4
		Time domain acceleration	C202		
		Basic Statistics time domain acceleration	C203	R/ W	11 1
		Datalog configuration	C204	R/W	1
		Datalog values	C205	R/N/W	(4+2*n) 4
Bluetooth	CD00	Customer specific data	CD01	R/W	4
		Advertising configuration	CD05	R/W	1
Threshold event	B200	Threshold config	B201	R/W Notify	1
		Threshold	B202	R/W	2
Generic access	1800	Device name	2A00	R	
		Appearance	2A01	R	
		Peripheral Preferred Connection Parameters	2A04	R	
		Central address resolution	2AA6	R	
Device information	180A	Model Number	2A24	R	
		Serial Number	2A25	R	
		Firmware revision	2A26	R	
		Hardware revision	2A27	R	
		Manufacturer	2A29	R	
Generic Attribute	1801	Service change	2A05	I	

Secure DFU Service	FE59	Buttonless DFU without bond		W/I	

5.4. Data format

This section describes the format of data related to characteristic and advertising messages over Bluetooth Low Energy (BLE), which may include integers (both signed and unsigned), floating point numbers, and bit fields.
All fields described in this section are formatted in **big endian** format. Big endian is a way of organizing multi-byte data types, such as integers, in computer memory. In a big endian format, the most significant byte (MSB) of the data is stored first, followed by the least significant byte (LSB). This means that when the data is read, the MSB is read first.

5.4.1. General

5.4.1.1. Battery

This register allows the user to read the battery level of the sensor. It should be noted that the battery level is estimated by the sensor, and the register is read-only. However, writing a specific value to the register will reset the battery level, which is necessary when changing the battery.

BATTERY								
Bit	7	6	5	4	3	2	1	0
field	BATTERY							

- BATTERY: The percentage of the remaining battery can be determined by reading this register. Writing 0xFF to this register will reset the battery algorithm to 100%, and any other value written to this register will be ignored. Format is unsigned 8-bit number.

5.4.1.2. Temperature

This register allows the user to read the contact temperature. The contact temperature refers to the temperature of an object in contact with the metallic bottom part of the sensor, such as a machine. The register is read-only and provides the current contact temperature.

TEMPERATURE															
Bit	15	14	13	12	11	10	9	8	7	6	5	4	3	2	1	0
field	TEMP															

- TEMPERATURE : Format is signed 16-bit number.

$$TEMP_{^\circ C} = TEMP_{LSB} * 0.01$$

5.4.1.3. Device status

This register allows the user to read the status of the device, such as the operating mode, error conditions, or other operational parameters. The register is read-only and writing to this register will have no effect.

DEVSTAT								
byte	0							
bit	7	6	5	4	3	2	1	0
field	SEN_ERR	RESERVED	OUT_TYP	THS_EVT	Reserved			

- SEN_ERR: temperature or acceleration error
- OUT_TYP: 0 = Acceleration, 1= Velocity (reserved for future use)
- THS_EVT: Event detected from threshold.

5.4.2. Data Collection

5.4.2.1. Measurement Counter

This register allows the user to track the number of measurements taken by the device, and it can be written to change the counter value.

Measurement counter															
Bit	15	14	13	12	11	10	9	8	7	6	5	4	3	2	1	0
field	CNT															

- CNT : Format is unsigned 16-bit number.

It should be noted that when the measurement counter is updated, the new value will be applied on the next measurement taken by the device.

5.4.2.2. Measurement interval

The measurement interval register controls the time period between two consecutive measurements taken by the device. This register can be written to adjust the measurement interval based on the requirements of the application. Understanding how to read and write the measurement interval register is important for controlling the frequency of measurements and optimizing the device's power consumption.

MEAS_INTERVAL											
bit	10	9	8	7	6	5	4	3	2	1	0
field	MEAS_INTERVAL										

- MEAS_INTERVAL: From 1min up to 24h. 1LSB=1min. Default=60min.

5.4.2.3. Trig mode

The trig mode register allows the user to initiate a new measurement flow by writing to the register. The register is write-only. When a task is in progress, the trigger (TRIG) command may be skipped. This means that if the sensor is performing a task such as a measurement or writing to memory, a trigger command sent during this time may be ignored until the task is completed.

Trig mode								
bit	7	6	5	4	3	2	1	0
field	DISCON							TRIG

- TRIG: trig a new measurement flow, which includes reading raw values, temperature, battery, and processing the data FFT.
- DISCON: forces a BLE disconnection before the measurement trig. This ensures that BLE won't create noise on the vibration data. However, the DISCON field can't be used alone, and only 0x81 or 0x80 are allowed.

5.4.3. Data processing

5.4.3.1. FFT information

The FFT information register allows the user to read and write the sensor bandwidth, which controls the frequency range of interest for the Fast Fourier Transform (FFT) performed on the data to determine the frequency content of the measured vibration. Changing the bandwidth also changes the sampling frequency on the time domain value. By adjusting the bandwidth, the user can optimize the device's power consumption while still capturing the relevant vibration data for their application.

FFT_INFO					
bit	4	3	2	1	0
field	OUTPUT_SEL	BW_MODE			

- BW_MODE: default = 11 (14.4K)

BW Mode	bin res	Fs	BW
0	0.125	512	200
1	0.25	1024	400
2	0.5	2048	800
3	1	4096	1600
4	2	8192	3200
5	3	12288	4800
6	4	16384	6400
7	5	20480	8000
8	6	24576	9600
9	7	28672	11200
10	8	32768	12800
11	**9**	**36864**	**14400**
12	10	40960	16000
13	11	45056	17600
14	12	49152	19200
15	13	53248	20800

- OUTPUT_SEL: velocity or acceleration output selection.

OUTPUT_SEL	
0	Acceleration
1	Velocity (Not implemented Reserved for future use)

5.4.3.2. Windowing

The FFT windowing register allows the user to select the windowing function to be applied to the data prior to performing the Fast Fourier Transform (FFT). Windowing functions are used to mitigate the effects of spectral leakage, which can occur when sampling a signal that is not an exact multiple of the sampling frequency. The register is read/write and contains several options for different windowing functions, including Rectangular, Hanning, and Flat-top.

WINDOWING								
bit	7	6	5	4	3	2	1	0
field							WIN_MODE	

- WIN_MODE: defines the FFT windowing

Window	Value
Rectangular / None	0
Hann	1 (Default)
Flat-Top	2

5.4.3.3. Windowing FFT compensation factor

The Windowing FFT compensation factor register allows the user to apply a compensation factor to the FFT output when a windowing function is used. The purpose of this compensation factor is to correct for the amplitude reduction caused by the windowing function, which is applied to mitigate the effects of spectral leakage when sampling a signal. The register is read-only. This compensation must be applied by the customer.

WIN_FFT_COMP								
byte	0	1	2	3	4	5	6	7
field	RMS				AMP			

- RMS: provide a compensation factor to be applied when calculating the FFT RMS. Format is 32-bit Floating point.
- AMP: gives the compensation factor to be applied when calculating the FFT amplitude of a single bin. Format is 32-bit Floating point.
  Windowing Compensation Factor (or Coherent power gain, Scalloping loss)

Window	RMS	AMP
Rectangular / None	1	1
Hann	$\sqrt{\frac{8}{3}}$	2
Flat-Top	4.6413	2.3900

5.4.4. Vibration data

5.4.4.1. Frequency domain acceleration, Time domain acceleration, Datalog time domain values

The process for reading time domain or frequency domain (raw, FFT, or datalogger) vibration values is as follows: The user must request an Axis, Index, and Length through a Write operation. The values can then be accessed via a notification or by the user performing a Read operation.

Request

raw, FFT, or datalogger				
byte	0	1	2	3
field	Axis	Index		Length

- Axis: axis to be read (2 = Z).
- Index: start index from 0 up to 4095 for Raw data (MSB first). From 0 to 2047 for FFT values. 0=1st value, 1=2nd value…
- Length: number of values to be read. The admissible range is 0 to 120.
  If the required length is larger than possible, fill the frame with the max possible data.

Response (notification or user read)

raw, FFT, or datalogger									
byte	0	1	2	3	4	5	-	m-1	m
field	Axis	Index		Length	Value_0			Value_n	

- Axis: axis which has been read (2 = Z).
- Index: start index of the value
- Length: number of values has been really sent over BLE.
- Value n: Raw in cg (signed) or FFT value in mg (unsigned). 1 LSB=1mg/cg.

5.4.4.2. Basic Statistics time domain

The process for reading time domain statistics.
The user must request an Axis through a Write operation. The values can then be accessed via a notification or by the user performing a Read operation.

Request

Basic statistics request	
Byte	0
Description	AXIS_SEL

- **AXIS**: Selected axis.

Response

Basic statistics response											
Byte	0	1	2	3	4	5	6	7	8	9	10
Description	AXIS_SEL	AVG		P2P		MID_R		STD		RMS	

- **AXIS**: Selected axis.
- **AVG**: Average value of the set of readings. Int16_t value in 1mg.
- **P2P**: Peak to peak value of the set of readings. Uint16value in 1cg.
- **MID_R**: mid-range, middle value of the peak-to-peak result. Int16value in 1mg
- **STD**: standard deviation of the signal. UInt16value in 1mg.
- **RMS**: root mean square of the signal. UInt16value in 1mg.

5.4.5. Threshold

5.4.5.1. Threshold config

The threshold configuration register is a multi-purpose register that is used to configure how the sensor's firmware processes incoming vibration data.

THS_CFG								
bit	7	6	5	4	3	2	1	0
field	EVT_FLAG		CONDITION	AUTO_CLR	THS_INPUT			

- EVT_FLAG: indicates whether the specified threshold has been exceeded, triggering an event. If the field is set to 1, it means that an event has been raised, and if it is set to 0, no event has been raised. Writing a value of 0 to this field will clear the event flag until the next measurement is triggered.

- CONDITION:

Condition	Value
>THS	0
< THS	1

- AUTO_CLR: determines how the event flag is cleared once the threshold event condition is no longer met. If AUTO_CLR is set to 1, the event flag will be automatically cleared when the event condition is no longer met. If AUTO_CLR is set to 0, the event flag will remain latched until it is cleared by the user. This feature allows the user to choose between automatic or manual clearing of the event flag.

Auto-clear	Value
Auto clear	0
Event latch	1

- THS_MODE: defines the mode for threshold

Mode	Value
None/Disabled	0
Acceleration/Velocity RMS raw	1
Acceleration/Velocity Peak to peak raw	2

5.4.5.2. Threshold level

The value in this register determines the level at which an event will be triggered.

THS_LEVEL		
byte	0	1
field	VALUE	

- VALUE: threshold in mg. 1lsb=1mg

5.4.6. Datalog

5.4.6.1. Datalog configuration

The datalog configuration register is used to set up and control the logging of sensor data. It includes several fields that allow the user to specify when data logging should start and stop, how often measurements should be taken, and under what conditions data should be logged. Note that the datalog configuration register only allows for one burst of 4096 raw data samples per axis to be stored.

DLOG_CFG								
bit	7	6	5	4	3	2	1	0
field							DLOG_MODE	

- DLOG_MODE:

Mode	Value	Description
Stop	0	Datalogger does not update
Measure Trig	1	Always store N-1 raw Data when new measurement
While Event	2	Store N-1 if flag is set. (N-1 then N)
On Event	3	Store N-1 if flag is on rising edge. (N-1 then N)

5.4.6.2. Datalog values

See Frequency domain acceleration, Time domain acceleration, Datalog time domain values

5.4.7. Live mode

5.4.7.1. Live mode measurement interval

The live mode measurement interval register specifies the time interval between two consecutive measurements in live mode.

LIVE_MODE_MEAS_INTERVAL								
bit	7	6	5	4	3	2	1	0
field	MEAS_LIVE_INTERVAL							

- MEAS_INTERVAL: From 1 sec up to 255sec. 1LSB=1sec. Default=30sec.

5.4.7.2. Live mode configuration

The Live Mode Configuration register allows the user to enable or disable live mode, which continuously streams data from the sensor to the connected device. When live mode is enabled, the sensor will continuously send data to the connected device, and the data can be received by subscribing to the appropriate BLE characteristic.

LIVE_MODE_CFG								
bit	7	6	5	4	3	2	1	0
field								ENABLE

- ENABLE: if set to 1 refresh the data at the rate sets by the MEAS_LIVE_INTERVAL The live mode is stopped when the central device disconnects from the sensor or when this bit is resets.

5.4.8. Bluetooth

5.4.8.1. Advertising configuration

The Advertising Configuration register allows the user to select one of several predefined transmission profiles. These profiles specify the duration of the advertising interval, the type of advertising used (on event or periodic), and other parameters. The user can select the desired profile by writing the appropriate value to the register. Once selected, the sensor will use the specified profile for all subsequent advertising.

ADV_CFG								
bit	7	6	5	4	3	2	1	0
field	ADV_MUTE						ADV_MODE	

- ADV_MUTE: configuration option that can be set to stop advertising until the next event or measurement occurs. When this flag is set, the sensor will not transmit any advertising packets, effectively muting its advertising signal. The flag is automatically reset once the next event or measurement occurs, allowing the sensor to resume advertising.

- ADV_MODE:

Mode	Value	Description
Low power continuous	0	On measure 15 times then every 10 sec
On Measure	1	Only after a measurement (15 consecutives ADV)
Event triggered	2	Only on measure 15 times then every 10 sec if THS_EVT is set

5.4.8.2. Customer specific data

The customer specific data register is a 4-byte register that allows the user to write any data they want. This data is then advertised over the Bluetooth Low Energy (BLE) connection. The purpose of this register is to allow users to add custom data to the advertising packet that can be used by other devices to identify and interact with the sensor. The specific content of the register is completely up to the user and can be any data that fits within the 4-byte limit.

CSD				
Byte	3	2	1	0
Field	CSD			

- **CSD**: Custom Specific Data: 4-Byte

5.4.9. Generic Access

5.4.9.1. Device name

Contains device name. (Used for scan response). By default, contain model number plus 4 last digit of the mac address “8511 ed75”.

5.4.9.2. Appearance

Sets to 00-02

5.4.9.3. Peripheral Preferred Connection Parameters

Could by 08-00-18-00-00-00-28-00

5.4.9.4. Central address resolution

Sets to 01

5.4.10. Device Information

5.4.10.1. Model Number

Contains model of the sensor in ASCII. Looks like “8511” or “8531”.

5.4.10.2. Serial Number

Contains mac Address of the sensor in ASCII. Looks like “f72010e4ed75”.

5.4.10.3. Firmware revision

Contains Firmware revision string in ASCII. Looks like “SW_8511-FFT_PTFB-B_2.2.0”.

5.4.10.4. Hardware revision

Contains Hardware revision string in ASCII. Looks like “HCC512B”.

5.4.10.5. Manufacturer

Contains Manufacturer string in ASCII. Fixed to “TE Sensor”.

5.4.11. Generic attribute

5.4.11.1. Service change

Not used.

5.4.12. Secure DFU Service

5.4.12.1. Buttonless DFU without bond

Use to switch into DFU mode.

5.4.1.13 TE SensorConnect App for Mobile Device Communication

The TE SensorConnect Apps can be downloaded from the App Store (iOS) and Google Play (Android). Search for TE SensorConnect App, download and install on your mobile device. The sensor will start the advertising mode when a battery is inserted. The sensor will continue in the advertising mode for one hour after which the BLE radio is turned off to conserve battery energy. The advertising mode can be restarted for a period of one hour by using the magnetic switch.

During the advertising period, basic sensor and status information is transmitted and can be received and read by any other BLE device in close proximity. While advertising, the sensor can enter the connected (or paired) mode and communicate with any mobile device using the BLE App. In the connected mode, various sensor parameters can be configured by the user. Sensor output data can also be viewed.

App screen examples

TE SensorConnect App

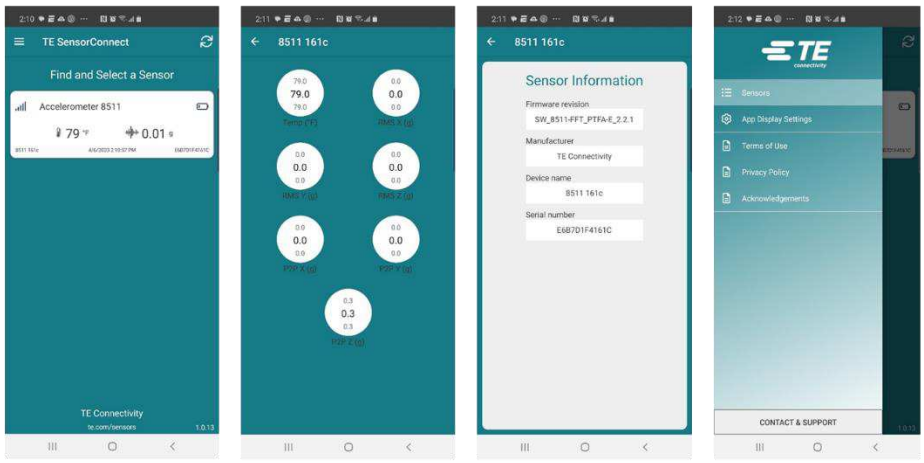

Sensor Dashboard | Live Data Mode | Sensor Information | Settings Screen

6. Magnetic Switch and LED

6.1. Magnetic Switch

The 8511N has an internal reed switch. This switch is activated when a strong magnet is brought close to the magnetic sensor location which is indicated by the magnet icon on the plastic housing. The magnet must be of sufficient strength and proximity to create a magnetic field of 25 mT at the switch location.

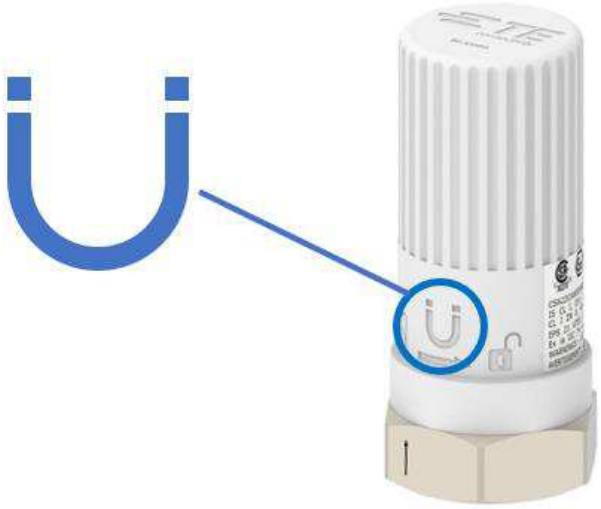

Two different functions are available depending on the user action:

User action	Function	LED
Short tap	Activates BLE for another one hour plus trigs a new measurement.	One short blink. Remove the magnet after this blink to avoid a sensor reset.
Hold magnet for 10+ seconds	Resets the sensor.	Wait for at least 10 seconds. Shortly before reset, the LED will blink rapidly as a warning. Remove the magnet once the LED remains solid on.

6.2. LED Indicator

The orange LED shows the state of the 8511N and provides responses to user actions.

USER ACTION		LED RESPONSE
Battery Insertion		**ON** for 2s
Magnet Activation		**ON** for 200ms
Maintain magnet in close proximity	<3 seconds	Slow **blinking**
	3–10 seconds	Rapid **blinking**
	>10 seconds	**OFF** (factory reset)

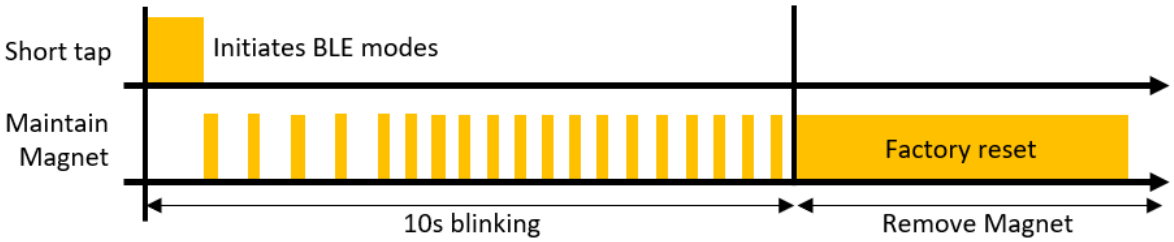



7. Battery

7.1. BATTERY TYPE

To meet various certification requirements, the following battery must be used:

Parameters	Typical value
Manufacturer	SAFT
Reference	LS 17330
Technology	Primary lithium-thionyl chloride (Li-SOCl2)
Nominal voltage	3.6 V
Capacity at 20°C	2100 mA

7.2. BATTERY LIFE

The 8511N vibration sensor is designed to use battery power in the most efficient ways possible. However, battery quality, long term ambient temperature conditions, data collection and transmission intervals, and spreading factor will impact overall battery life.

- Battery Quality – Batteries for the sensor must be acquired from authorized distributors and sources. This ensures that batteries have been stored and transported in temperature conditions that do not exceed the manufacturer's recommended limits. End users must also store batteries within these temperature limits. If batteries are exposed to temperatures exceeding recommended limits, battery life will be affected.

- Ambient Temperature Conditions – Optimum battery life can be expected when the ambient temperature is near 25ºC. In most applications, the temperature will vary within the specified limits. These variations can shorten battery life.

- Data Collection and Transmission Intervals – The sensor consumes the most power when it is taking measurements, processing the data, and transmitting the information via radios. The user can select the intervals for these actions. Longer intervals will consume less battery power and result in longer battery life.

- Under the most ideal conditions, a battery life of 4 years is expected. However, each application will have conditions that are something less than ideal. These typical applications should expect a battery life between 3 and 4 years.

7.3. BATTERY REPLACEMENT

The 8511N's battery must be replaced if depleted. Unscrew the plastic housing and remove it from the base. Carefully pull on the orange tab to remove the battery. Note that it MUST be replaced by the same battery type as shown above. Substitute batteries may damage and/or bring uncontrolled behavior to the sensor. Double check the polarity and then insert the new battery inside the holder. Re-attach the plastic cover on the sensor. Refer to the Installation Manual (Doc# 20023687-24} for specific details regarding battery installation and replacement. When complete, the battery life estimator in the firmware must be reset to a "full" battery status, this can be done using the TE SensorConnect app in the Sensor Settings screen.

8. Dimensions

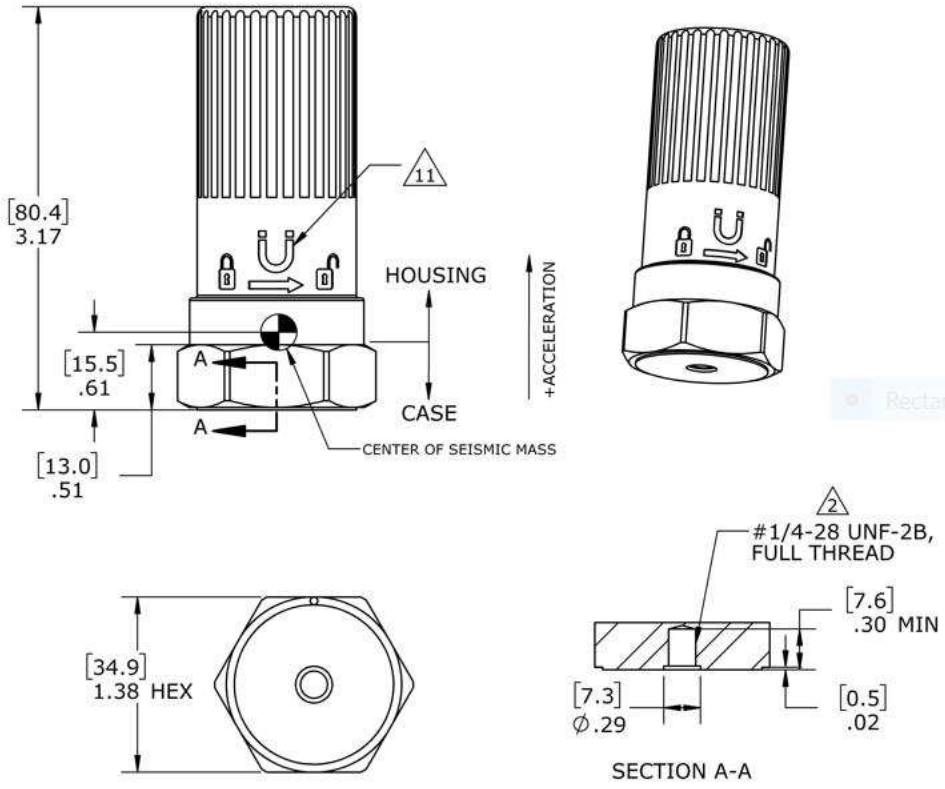

9. Mounting Considerations & Accessories

A solid mounting method is required to get optimum performance from the accelerometer. Any loose parts or unsecured mounting features will introduce noise and corrupt the signals of interest. Shown below are six different mounting options available for the 8511N accelerometer.

Part Number	Description	Image	Notes
None	1/4 -28 Female Threaded Hole	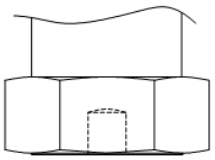	• Integral part of the basic sensor • Mates to existing ¼-28 male stud or to any mounting accessory from TE
AC-D03636	¼-28:1/4-28 Male Stud	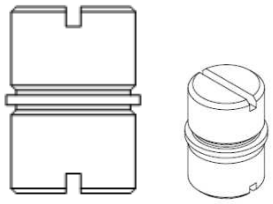	• Torque to values shown in the Installation Manual Doc# 20023687-24
AC-D03665	¼-28:M6x1.0-6g Male Stud	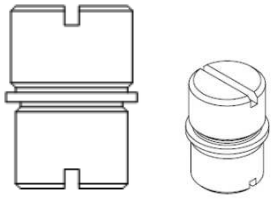	• Torque to values shown in the Installation Manual Doc# 20023687-24
AC-D03664	¼-28:M5x0.8-6g Male Stud	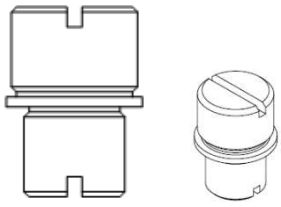	• Torque to values shown in the Installation Manual Doc# 20023687-24

Part Number	Description	Image	Notes
AC-D04210	¼-28 Male Adhesive Mount	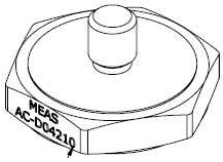	• Mount with a rigid adhesive such as epoxy or cyanoacrylate • Remove oil, grease, and debris from the mounting surface prior to attachment
AC-A04209	¼-28 Male Magnetic Mount	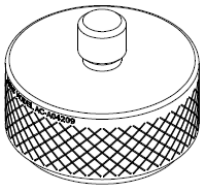	• Remove magnet “keeper” from the bottom mounting surface before installation • 30 lbf (133.5N) required for removal from a ferrous mounting surface

For the adhesive mounting stud, secure with a rigid adhesive such as epoxy or cyanoacrylate. Do not use pressure sensitive adhesives or foam tapes. For the magnetic mounting stud, remove the keeper prior to attachment. The magnetic mounting will have a 30 lb pull strength when attached to a ferrous surface.

Note – Some mounting accessories may be supplied as part of a kit. For large volume deliveries, desired mounting accessories must be ordered as a separate item or procured independently.

10. Regulatory Statements

FCC and IC

This Radio Equipment is Certified for FCC (US) and ISED (Canada).

This equipment does not support simultaneous transmissions.

Changes or modifications not expressly approved or authorized by TE Connectivity for compliance could void the user's authority to operate the equipment.

FCC Warning:

THIS DEVICE COMPLIES WITH PART 15 OF THE FCC RULES.OPERATION IS SUBJECT TO THE FOLLOWING TWO CONDITIONS: (1) THIS DEVICE MAY NOT CAUSE HARMFUL INTERFERENCE, AND (2) THIS DEVICE MUST ACCEPT ANY INTERFERENCE RECEIVED, INCLUDING INTERFERENCE THAT MAY CAUSE UNDESIRED OPERATION.

Note: This equipment has been tested and found to comply with the limits for a Class B digital device, pursuant to Part 15 of the FCC Rules. These limits are designed to provide reasonable protection against harmful interference in a residential installation. This equipment generates, uses, and can radiate radio frequency energy and, if not installed and used in accordance with the instructions, may cause harmful interference to radio communications. However, there is no guarantee that interference will not occur in a particular installation. If this equipment does not cause harmful interference to radio or television reception, which can be determined by turning the equipment off and on, the user is encouraged to correct the interference by one or more of the following measures:

- Re-orient or relocate the receiving antenna
- Increase the separation between the equipment and the receiver
- Connect the equipment to an outlet on a circuit that is different from that to which the receiver is connected.
- Consult the dealer or an experienced radio/TV technician for help.

Industry Canada (IC) Warning:

This device complies with ISED Canada license-exempt RSS standard(s). Operation is subject to the following two conditions: (1) this device may not cause interference, and (2) this device must accept any interference, including interference that may cause undesired operation of the device.

Le présent appareil est conforme aux CNR d'ISED Canada applicables aux appareils radio exempts de licence. L'exploitation est autorisée aux deux conditions suivantes : (1) l'appareil ne doit pas produire de brouillage, et (2) l'appareil doit accepter tout brouillage radioélectrique subi, même si le brouillage est susceptible d'en compromettre le fonctionnement.

Radiation Exposure Statement - This equipment should be installed and operated with minimum distance 20cm between the radiator & your body.

Déclarationd'exposition aux radiations - Cetéquipementestconforme Canada limitesd'exposition aux radiations dans un environnement non contrôlé. Cetéquipementdoitêtreinstallé et utilisé à distance minimum de 20cm entre le radiateur et votre corps.

EU CONFORMITY

Hereby, Measurement Specialties (China), Ltd. a TE Connectivity Company, declares that this Wireless Vibration Sensor is in compliance with essential requirements and other relevant provisions of the following directives:

Directive 2014/53/EU
Directive 2014/30/EU
Directive 2014/35/EU

Model Families: 8511N & 8531N

Product Description: Wireless Vibration Sensor

Operating Bands: BLE 2.4GHz

Max Output Power (ERIP): BLE: 4.054dBm

Manufacture/Brand: TE Connectivity Ltd

Manufacturer:

Measurement Specialties (China) LTD
No 26 LangShan Road
518057 Shenzhen-Nanshan District, China

European contact:

TE Connectivity Sensors France
4 Rue Gaye Marie
31027 Toulouse – France

Please contact customer service for inquire about official regulatory documentation.

11. Intrinsic Safety Models

This Equipment is certified for Intrinsic Safety when model code “EX” is selected during the ordering process. Please see ordering information in Section 12 for details:

Intrinsic Safety approval is as follows:

IS Class I, Div1, Groups A, B, C, and D;
Class I Zone 0, AEx ia IIC T4 Ga;
Ex ia IIC T4 Ga;
Il 1 G Ex ia IIC T4 Ga

12. Ordering Information

The 8511N is packaged in kits that contain mounting accessories and a battery insertion tool. Use the TCPN number when ordering to ensure that you receive the proper kit.

		Accessories Included							
Order TCPN	Sensor Model Number	¼-28:¼-28 Male stud	¼-28:M5 Male stud	¼-28:M6 Male stud	Magnetic Mount	Rotation Mount	Adhesive Mount	Battery (Saft 17330)	Battery Insert Tool
20026937-20	8511N-NX (not Ex certified)	•	•	•	•				•
20026943-20	8511N-EX (Ex certified)	•	•	•	•				•
20026937-80	8511N-NX (not Ex certified)	•						•	•
20026943-80	8511N-EX (Ex certified)	•						•	•

Note: Ex certified products conform to these standards:

Explosive Atmospheres: ATEX/IECEx/US/CANADA IS CL I, DIV 1, GRP A, B, C, D, T4; CL 1. ZN 0, AEx ia IIC T4 Ga; II 1 G, Ex ia IIC T4 Ga;

To order accessories separately, use these TCPN numbers:

Order TCPN	Accessory Description
20027468-00	¼-28:¼-28 Rotating Mount
AC-D04210	Adhesive Mounting Adaptor
AC-A04209	Magnetic Mounting Adaptor

AC-D03636	¼ x 28 by ¼ x 28 Double-ended Male Stud
AC-D03665	¼ x 28 by M6 Double-ended Male Stud
AD-D03664	¼ x 28 by M5 Double-ended Male Stud

13. Additional Notes:

Sales and technical support

NORTH AMERICA

Measurement Specialties, Inc.,
a TE Connectivity Company
Phone: +1 800-745-8008
Email: TEsensors-CCMeas@te.com

EUROPE

Measurement Specialties (Europe), Ltd.,
a TE Connectivity Company
Phone: +31 73 624 6999
Email: customercare.lcsb@te.com

ASIA

Measurement Specialties (China), Ltd.,
a TE Connectivity Company
Phone: +86 0400-820-6015
Email: customercare.shzn@te.com

Manufacturer: Measurement Specialties (China) Inc., a TE Connectivity Company
No. 26 Langshan Road, Shenzhen High-Tech Park (North), Nanshan District,Shenzhen, 518057
Tel: +86 0400-820-6015 customercare.shzn@te.com

te.com/sensors

The Bluetooth® word mark and logos are registered trademarks owned by the Bluetooth SIG, Inc. and any use of such marks by TE Connectivity is under license. Other trademarks and
trade names are those of their respective owners.
Measurement Specialties Inc., a TE Connectivity company.
Measurement Specialties (MEAS), American Sensor Technologies (AST), TE Connectivity, TE Connectivity (logo) and EVERY CONNECTION COUNTS are trademarks. All other logos,
products and/or company names referred to herein might be trademarks of their respective owners.
The information given herein, including drawings, illustrations and schematics which are intended for illustration purposes only, is believed to be reliable. However, TE Connectivity makes
no warranties as to its accuracy or completeness and disclaims any liability in connection with its use. TE Connectivity's obligations shall only be as set forth in TE Connectivity's Standard
Terms and Conditions of Sale for this product and in no case will TE Connectivity be liable for any incidental, indirect or consequential damages arising out of the sale, resale, use or misuse
of the product. Users of TE Connectivity products should make their own evaluation to determine the suitability of each such product for the specific application.
© 2022 TE Connectivity Ltd. family of companies All Rights Reserved.