THIS DRAWING IS UNPUBLISHED. RELEASED FOR PUBLICATION -,- .
© COPYRIGHT - BY TYCO ELECTRONICS CORPORATION. ALL RIGHTS RESERVED.

LOC	DIST
FT	0

REVISIONS

P	LTR	DESCRIPTION	DATE	DWN	APVD
	U	REVISED PER ECO-07-004158	2/23/07	SS	SH

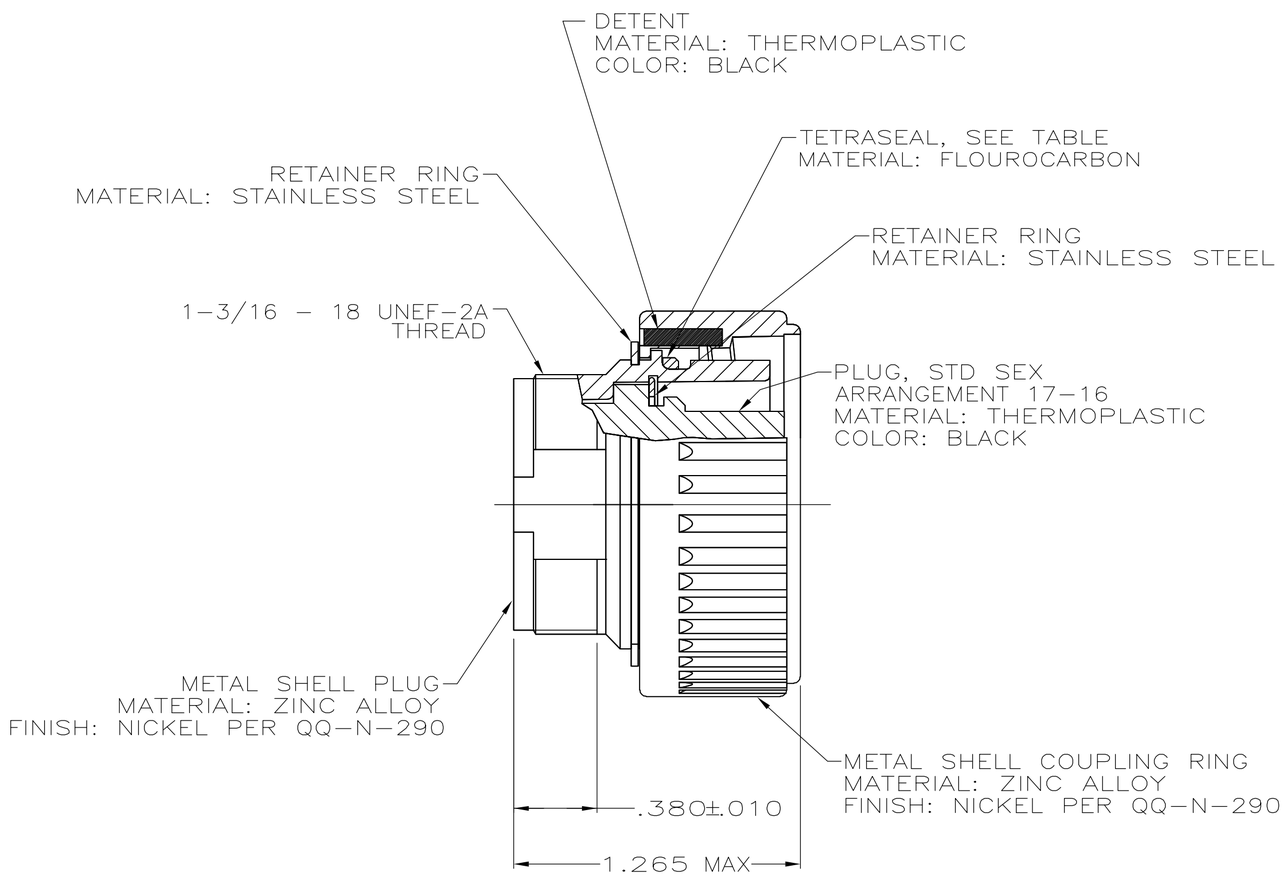

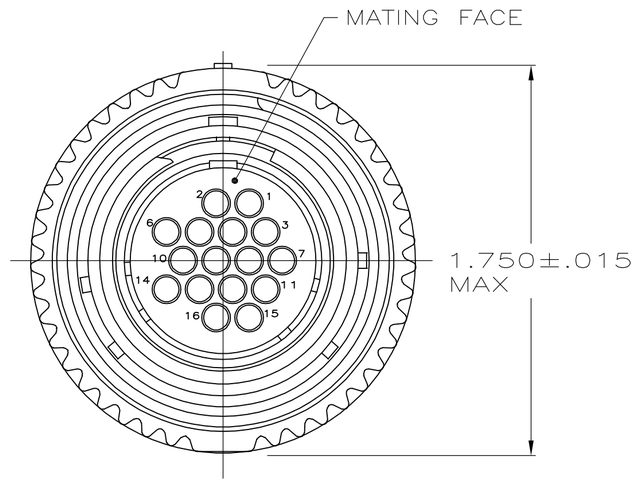

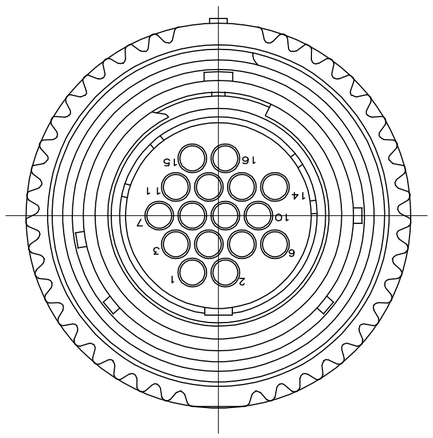

208488-5 ONLY

REVERSE POLARIZATION		
	NO	208488-5
	YES	208488-4 ④
	YES	208488-3
	NO	208488-1
	TETRASEAL	PART NUMBER

NOTES:

1. 208488-1 MATES WITH AMP RECEPTACLE 208489-1 OR -2. 208488-3 MATES WITH AMP RECEPTACLE 208489-1 ONLY.
2. THIS PLUG ACCEPTS SIXTEEN (16) MULTIMATE SOCKET CONTACTS. MAXIMUM WIRE INSULATION DIAMETER = .105.
3. AMP PART NUMBER AND DATE CODE TO BE LOCATED ON COUPLING RING.

④ COMPONENT KIT (ONE KIT PER BAG); ASSEMBLY AND FUNCTIONALITY ARE ASSUMED BY THE CUSTOMER.

THIS DRAWING IS A CONTROLLED DOCUMENT.

DIMENSIONS: INCHES

TOLERANCES UNLESS OTHERWISE SPECIFIED:
0 PLC ± -
1 PLC ± -
2 PLC ± -
3 PLC ± -
4 PLC ± -
ANGLES ± -

MATERIAL: SEE CALLOUT
FINISH: SEE CALLOUT

DWN R.LEE BG 6-28-91
CHK W.G.LENKER 4-20-92
APVD -
PRODUCT SPEC 108-10040
APPLICATION SPEC -
WEIGHT -

tyco Electronics — Tyco Electronics Corporation, Harrisburg, PA 17105-3608

NAME: PLUG ASSEMBLY, STD SEX, SERIES 1, 22-16, CMC -

SIZE	CAGE CODE	DRAWING NO	RESTRICTED TO
A2	00779	C-208488	-

CUSTOMER DRAWING | SCALE 2:1 | SHEET 1 OF 1 | REV U

208488