



RoHS Ready

KU series

KUP Enclosed Relay
KUIP 8mm Coil to Contacts
KUGP 3mm Contact Gap, 8mm Coil to Contacts
KUEP 10 Amp 150VDC Load Switching
KUMP 15 Amp 277VAC

File E22575
File LR15734

Users should thoroughly review the technical data before selecting a product part number. It is recommended that users also seek out the pertinent approvals files of the agencies/laboratories and review them to ensure the product meets the requirements for a given application.

Features

- AC coils: 6-240VAC, 50/60 Hz. DC: 6-110VDC.
- Contact arrangement up to 4PDT.
- Wide selection of termination and mounting styles.
- PC terminals available.
- Push to test button and indicator lamps.
- KUEP incorporates a blow out magnet for high voltage DC switching.
- KUIP offers 8mm contact-to-coil spacing for a higher degree of isolation.
- KUGP provides 3mm contact gap and 8mm contact-to-coil spacing.
- Complete line of sockets and DIN rail.
- Class B coil insulation.

Contact Data @ 25°C

Arrangements: See respective ordering information table.
Materials: Fine silver (5 amp) silver-cadmium oxide (10 amp).
Gold flash available as standard.
Gold diffused and gold alloy on special order.
Expected Mechanical Life:

Contact Ratings

Material	Arrangement	UL/CSA Ratings	Expected Life
Fine Silver	All	5 amps @ 28VDC or 240VAC 80% PF, 2.5 amp tungsten @120VAC, 1/2 amp @ 120VDC.	100,000
		1/6 HP @120VAC, 1/3 HP @ 240VAC, 5 FLA, 15 LRA @ 250VAC (FLA covered by 30,000 operations).	
Silver-Cadmium Oxide	1-2 Pole KUP KUIP KUGP KUEP All KUMP	10 amps @ 28VDC or 240VAC, 80% PF, 5 amp tungsten @ 120VAC, 3A 600VAC, 1/2 amp @ 120VDC.	100,000
		1/3 HP @ 120VAC, 1/2 HP @ 240, 480, and 600VAC, 10 FLA 30 LRA @ 120VAC, 5 FLA, 15 LRA @ 250VAC.(FLA ratings covered by 30,000 operations)	
	KUMP	15 amp @ 277VAC, 80% PF KUM KUMP	100,000
	3 Pole KUP KUIP	10 amp @ 28VDC or 120VAC, 80% PF, 6 2/3 amp @ 240VAC, 80% PF	100,000
	4 Pole	10 amp per pole not to exceed 30 amp total @ 28VDC, 120VAC, 80% PF, 6 2/3 amp @ 240VAC, 80% PF	100,000
	KUEP SPST-NO KUEP 2PST-NO KUEP 2PDT	10 amp @ 150VDC 5 amp @ 150VDC 3 amp @ 150VDC	100,000

(All other AC ratings apply KUEP.)

Initial Dielectric Strength

Between Open Contacts: 1,200V rms; KUGP, 3,500V rms.
Between Adjacent Contacts: 2,200V rms.
Between Contacts and Coil: 2,200V rms; KUGP, KUIP, 3,750V rms.

Coil Data @ 25°C

Voltage: 6 to 110VDC and 6 to 240VAC.
Nominal Coil Power:
DC Coils: 1.2 Watts - KUP, KUIP, KUMP, 1 - 3 pole; KUEP, 1 pole.
DC Coils: 1.8 Watts - KUP, 4 pole; KUEP, 2 pole; KUGP.
AC Coils: 2.0VA - KUP, KUIP, 1 - 2 pole; KUEP, 1 pole.
AC Coils: 2.7VA - KUP, KUIP, 3 pole; KUEP, 2 pole; KUGP, KUMP.

Coil Data

DC Volts	1.2 Watt		1.8 Watt	
Nominal	DC Ohms ± 10%	Nom. I ma	DC Ohms ± 10%	Nom. I ma
5	21	238	14	360
6	32.1	187	20	300
12	120	100	80	150
24	472	51	320	75
48	1,800	26.7	1,260	38
110	10,000	11	6,720	16
AC Volts	**2VA**		**2.7VA**	
Nominal	**DC Ohms ± 15%**	**Nom. I ma**	**DC Ohms ± 15%**	**Nom. I ma**
6	6	335	4.2	460
12	24	168	18	230
24	85	84	72	115
120	2,250	17.5	1,700	24
240	9,110	8.75	7,200	12

Operate Data @ 25°C

Must Operate Voltage:
DC Coils: 75% of nominal voltage or less.
AC Coils: 85% of nominal voltage or less.
Operating Time (Excluding Bounce):
15 milliseconds, typical, at nominal voltage.
Release Time (Excluding Bounce):
10 milliseconds, typical, at nominal voltage.

Environmental Data

Temperature Range:
Operating: **Enclosed Relays:** -45°C to maximum listed in table below.
Open Relays: Add 15°C to maximum listed.

Max C°	+45°C	+50°C	+55°C	+70°C	+75°C	+80°C	+95°C
KUP	AC 3-4 pole	DC 4 pole	AC 1-2 pole	DC 1-3 pole			
KUIP				AC 3 pole		AC 1-2 pole	DC 1-3 pole
KUGP				AC 2 pole	DC 2 pole		
KUEP	AC 2 pole		AC 1 pole	DC 1-2 pole			
KUMP	AC 3 pole		AC 1-2 pole	DC 1-3 pole			

Environmental Data (Continued)

Maximum Allowable Ambient Temperature vs. Voltage (KUP enclosed)

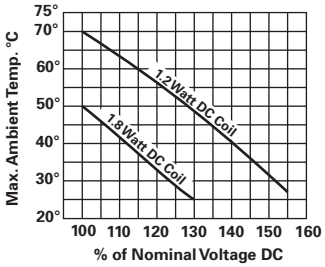

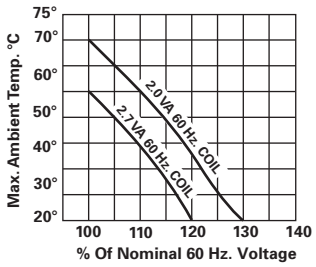

Mechanical Data

Termination: Quick connect, solder and PC board.
Enclosure: Clear polycarbonate dust cover.
Weight: 3.0 oz. (85g) approximately.

Ordering Information

Typical Part No. >	KU KUP	-14	A	1	5	F	-120

1. Basic Series & Type:
KU = Basic open relay.
KUP = Basic enclosed relay.

2. Contact Arrangement:
1 = 1A (SPST-NO) 14 = 3C (3PDT)
5 = 1C (SPDT) 17 = 4C (4PDT)
11 = 2C (DPDT)

3. Coil Input:
A = AC 50/60 Hz.
D = DC

4. Mountings:

Type	KU	KUP (through 3 poles)	KUP (4 pole models)
Codes Available	1,3,4	1,2,3,4,5, A,E,T	1,3,5,A,E
OPEN STYLE 1 = #6-32 stud, .218" (5.54mm) locating tab. 3 = #6-32 tapped core, .125" (3.18mm) locating tab. 4 = #6-32 tapped core, .218" (5.54mm) locating tab.		1 = PLAIN CASE; 2 = with test button. 3 = with indicator lamp.* 4 = with test button & indicator lamp.* 5 = BRACKET MOUNT CASE. A = PLAIN CASE, #6-32 stud, locating tab. E = PLAIN CASE, tapped core, locating tab. T = TOP FLANGE CASE. * Indicator lamps are available on models with the following coils: 6-24VAC and DC, 110VDC and 120-240VAC. Only models with 120-240VAC coils are UL recognized.	

5. Terminal & Contact Material:

Type	1 & 2 Pole Models	3 Pole Models	4 Pole Models
Codes Available	1, 5, 7, K	1, 5, 7	1**, 5**,7, 9

**4 pole KUP with .187" (4.75mm) quick connect/solder terminals will not plug into sockets. Must use .110" (2.79 mm) quick connect solder terminals for socket mounting.

1 = .187" (4.75mm) quick-connect/solder; silver, 5 amps.
5 = .187" (4.75mm) quick connect/solder; silver-cadmium oxide, 10 amps.
7 = .047" (1.19mm) printed circuit; silver-cadmium oxide, 10 amps.
9 = 4 pole KU, KUP: .110" (2.79mm) quick connect/solder; silver-cadmium oxide, 10 amps.
K = .250" (6.35mm) quick connect; silver-cadmium oxide, 10 amps.

5A. Gold Flashed Contact Option:
F = Optional gold flashing for silver and silver-cadmium oxide contacts.

6. Coil Voltage:
To 240VAC, 50/60 Hz. or 110VDC.

Note: All part numbers are RoHS compliant.

Our authorized distributors are more likely to stock the following items for immediate delivery.

KUP-5A15-24	KUP-11A15-12	KUP-11D15-5	KUP-11D55-110	KUP-14A55-24	KUP-14D25-24
KUP-5A15-120	KUP-11A15-24	KUP-11D15-12	KUP-14A11-120	KUP-14A55-120	KUP-14D35-24
KUP-5A15-240	KUP-11A15-120	KUP-11D15-24	KUP-14A15-12	KUP-14A55-240	KUP-14D55-12
KUP-5A55-120	KUP-11A15-240	KUP-11D15-110	KUP-14A15-24	KUP-14D11-24	KUP-14D55-24
KUP-5D15-12	KUP-11A35-120	KUP-11D35-24	KUP-14A15-120	KUP-14D15-6	KUP-17A19-120
KUP-5D15-24	KUP-11A55-24	KUP-11D55-6	KUP-14A15-240	KUP-14D15-12	KUP-17A55-24
KUP-5D55-12	KUP-11A55-120	KUP-11D55-12	KUP-14A25-120	KUP-14D15-24	KUP-17D19-24
KUP-5D55-24	KUP-11AT5-120	KUP-11D55-24	KUP-14A35-120	KUP-14D15-48	KUP-17D55-24
KUP-11A11-120	KUP-11D11-24	KUP-11D55-48	KUP-14A45-120	KUP-14D15-110	

Ordering Information

High Isolation Design

Typical Part No. >	KUIP KUGP	-5	A	5	5	-120

1. Basic Series & Type:
KUIP = Enclosed relay with 8mm contact to coil spacing.
KUGP = Enclosed relay with 3mm open contact spacing and 8mm contact to coil spacing. (Form A and Form X arrangements only)

2. Contact Arrangement:
5 = 1 Form C (SPDT)*
7 = 2 Form A (DPST-NO)
11 = 2 Form C (DPDT)*
14 = 3 Form C (3PDT)*
* Not offered on KUGP model.

3. Coil Input:
A = AC, 50/60 Hz.
D = DC

4. Mountings:
1 = PLAIN CASE, SOCKET MOUNT.
5 = BRACKET MOUNT CASE.
T = TOP FLANGE CASE.

5. Terminal & Contact Material:
3 = .047" (1.19mm) printed circuit board; silver.
5 = .187" (4.75mm) quick connect/solder; silver-cadmium oxide.

6. Coil Voltage:
To 240VAC, 50/60 Hz. or 110VDC. (For 277VAC, consult factory.) See coil data tables.

Note: All part numbers are RoHS compliant.

Our authorized distributors are more likely to stock the following items for immediate delivery.

KUGP-7D55-24
KUIP-5A55-120
KUIP-11D55-12
KUIP-11D55-24
KUIP-14A15-120
KUIP-14D15-12
KUIP-14D15-24

Ordering Information

High Voltage DC Switching

Typical Part No. >	KUEP	-3	A	1	5	-120

1. Basic Series & Type:
KUEP = Enclosed relay with magnetic blow-outs.

2. Contact Arrangement:
3 = 1X (SPST-NO-DM)
7 = 2A (DPST-NO)
11 = 2C (DPDT)

3. Coil Input:
A = AC 50/60 Hz.
D = DC

4. Mountings:
1 = PLAIN CASE;
3 = with indicator lamp.*
5 = BRACKET MOUNT CASE
T = TOP FLANGE CASE.
*Indicator lamps are available on models with the following coils: 6-24VAC and DC, 110VDC and 120-240VAC. Only models with 120-240VAC coils are UL recognized.

5. Terminal & Contact Material:
5 = .187" (4.75mm) quick connect/solder; silver-cadmium-oxide.
7 = .047' (1.19mm) printed circuit; silver-cadmium-oxide.

6. Coil Voltage:
To 240VAC, 50/60 Hz. or 110VDC. (For 277VAC, consult factory.)

Note: All part numbers are RoHS compliant.

Our authorized distributors are more likely to stock the following items for immediate delivery.

KUEP-3A15-120
KUEP-3D15-12
KUEP-3D15-24
KUEP-3D15-110
KUEP-7D15-24
KUEP-11A15-120
KUEP-11D15-12
KUEP-11D15-24

Ordering Information

15 Amp Switching

Typical Part No. >	KUM KUMP	-14	A	1	8	-120

1. Basic Series & Type:
KUM = 15 amp open relay
KUMP = 15 amp enclosed relay

2. Contact Arrangement:
1 = 1A (SPST-NO)
2 = 1B (SPST-NC)
3 = 1X (SPST-NO-DM)
4 = 1Y (SPST-NC-DB)
5 = 1C (SPDT)
6 = 1Z (SPDT-NC-NO [DB-DM])
7 = 2A (DPST-NO)
8 = 2B (DPST-NC)
11 = 2C (DPDT)
12 = 3A (3PST-NO)
13 = 3B (3PST-NC)
14 = 3C (3PDT)

3. Coil Input:
A = AC, 50/60 Hz. D = DC

4. Mountings:

Type KUM	KUMP	
OPEN STYLE 1 = #6-32 stud, .218" (5.54mm) locating tab. 2 = 2-hole bracket, #6-32 tapped. 3 = #6-32 tapped core, .125" (3.18mm) locating tab. 4 = #6-32 tapped core, .218" (5.54mm) locating tab. 5 = #6-32 tapped core, no locating tab.	1 = PLAIN CASE; 2 = with test button. 3 = with indicator lamp.* 4 = with test button & indicator lamp.* 5 = BRACKET MOUNT CASE; 6 = with test button. 7 = with indicator lamp.* 8 = with test button & indicator lamp.* 9 = STUD ON END OF PLAIN CASE.	A = PLAIN CASE, #6-32 STUD LOCATING TAB; B = with test button. C = with indicator lamp.* D = with test button & indicator lamp.* E = PLAIN CASE, TAPPED CORE, LOCATING TAB; F = with test button. G = with indicator lamp.* H = with test button & indicator lamp.* T = TOP FLANGE CASE.
	*Indicator lamps are available on models with the following coils: 6-24VAC and DC, 110VDC and 120-240VAC. Only models with 120-240VAC coils are UL recognized.	

5. Terminal & Contact Material:

Type	1 & 2 Pole Models	3 Pole Models
Codes Available	6,8,9,G	6,8,9

6 = .205" (5.21mm) quick connect/solder; silver-cadmium-oxide.
8 = .187" (4.75mm) quick connect/solder; silver-cadmium-oxide.
9 = .047" (1.19mm) printed circuit; silver-cadmium-oxide.
G = .250" (6.35mm) quick connect; silver-cadmium-oxide. (Not available on 3 pole models.)

6. Coil Voltage:
To 240VAC, 50/60 Hz. or 110VDC (For 277VAC, consult factory.)

Note: All part numbers are RoHS compliant.

Our authorized distributors are more likely to stock the following items for immediate delivery.

KUMP-11A18-24	KUMP-11D18-12	KUMP-14A18-24	KUMP-14D18-24
KUMP-11A18-120	KUMP-11D18-24	KUMP-14A18-120	
KUMP-11A18-240	KUMP-11D18-110	KUMP-14D18-12	

Outline Dimensions

Open Relays

Bracket Type

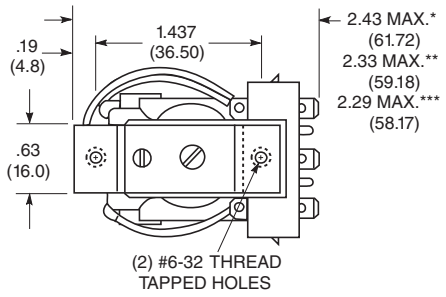

X Is For Terminal Dimensions.
See Terminal Drawings.

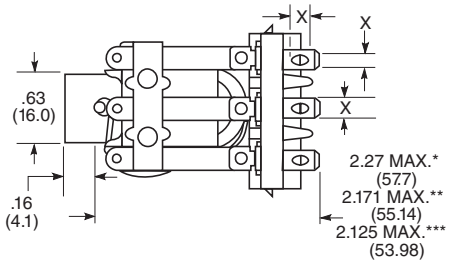

Stud Type

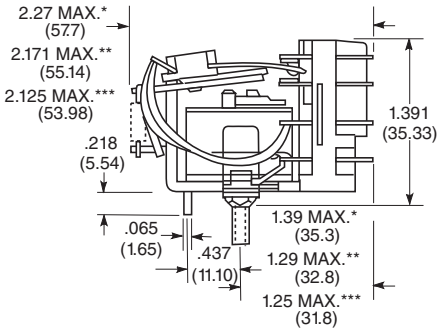

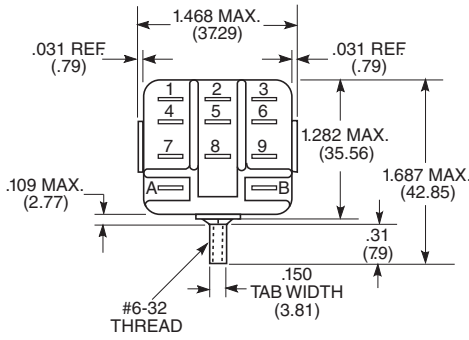

Seated Heights For Open Relays

1.391" (35.33mm) for #6-32 stud
with .218" (5.54mm) locating tab.

1.52" (38.6mm) for bracket
with 2-#6 32 tapped holes.

1.282" (32.56mm) for #6-32 tapped core
with .125" (3.18mm) or .218" (5.54mm) locating tab.

2.046" (51.97mm) for relay
with printed circuit terminals.

STUD TYPE also available with .125" (3.18mm) tab, as well as without stud and locating tab. Models without stud have core tapped #6-32 THREAD, .25" (6.4mm) minimum depth.

*Dimensions with .250" (6.35mm) terminals.

**Dimensions with .110" (2.79mm) or .205"(5.21mm) terminals.

***Dimensions with .187" (4.75mm) terminals.

Enclosed Relays

Plain Case

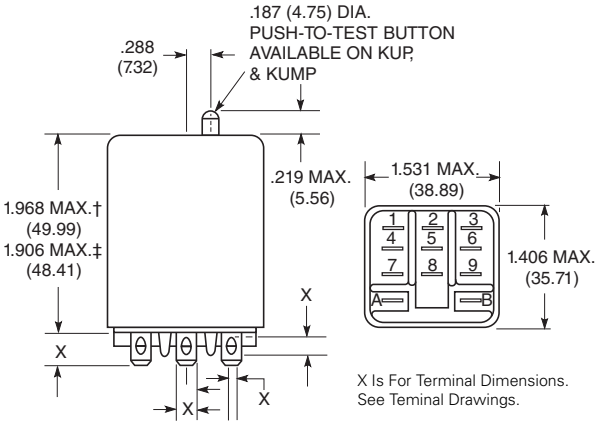

X Is For Terminal Dimensions.
See Teminal Drawings.

Top Flange Case

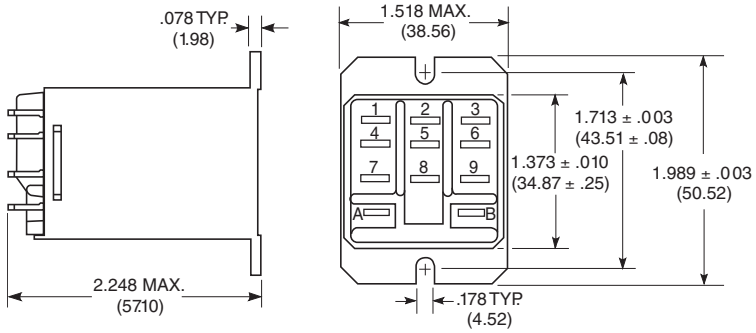

Bracket Mount Case

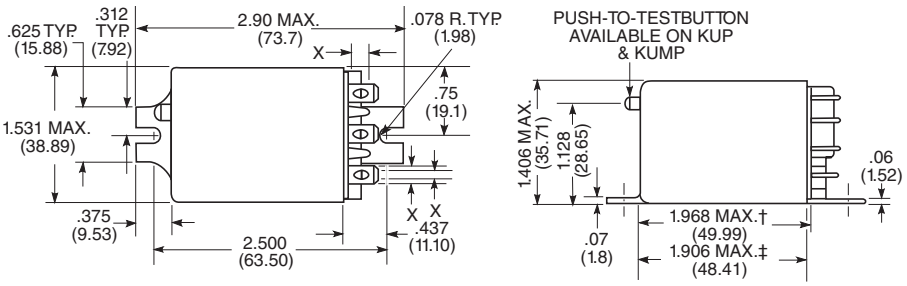

Core and Stud Mount Cases

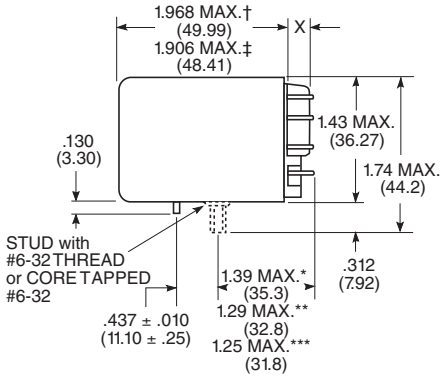

†Dimensions with .250" (6.35mm) terminals.

‡Dimensions with .110" (2.79mm), .187" (4.75mm and .205" 5.21mm) terminals.

*Dimensions with .250" (6.35mm) terminals.

**Dimensions with .110" (2.79mm) or .205" (5.21mm) terminals

***Dimensions with .187" (4.75mm) terminals.

Stud on End Case

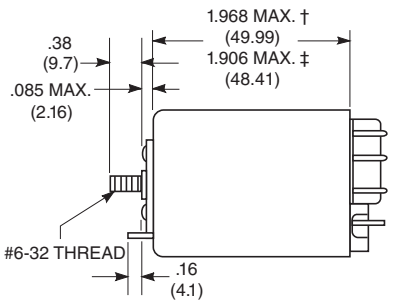

Outline Dimensions (Continued)

Relay Front Diagrams

1-3 Pole Relays

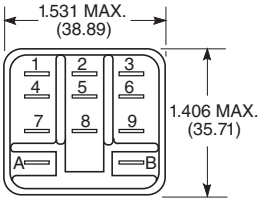

Relays With .250" (6.35mm) Terminals

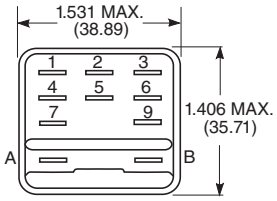

4 Pole Relays

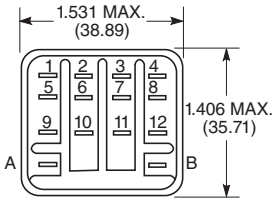

Terminal Dimensions

.110" (2.79mm) Quick ConnectQuick Connect

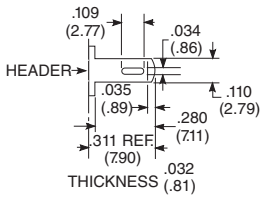

.205" (5.21mm) Quick Connect

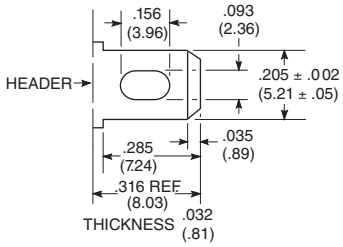

.250" (6.35mm)

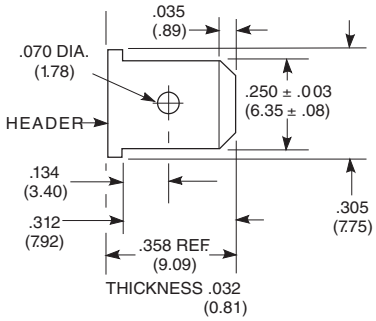

Printed Circuit

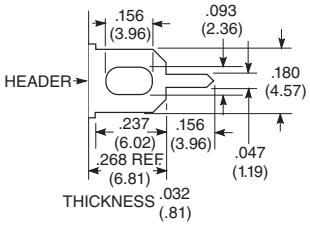

.187" (4.75mm) Quick Connect

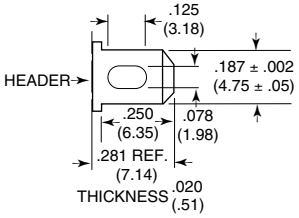

Note: All drawings shown oversize.

Wiring Diagrams

***1 Form X**

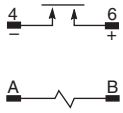

1 Form C

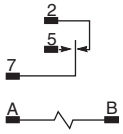

***2 Form A**

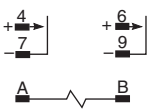

***2 Form C**

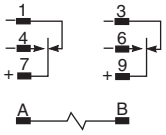

3 Form C

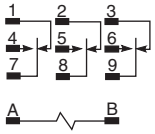

4 Form C

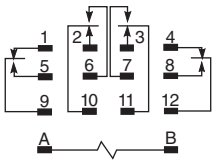

*Recommended Load Polarity for Optimum Arc Suppression.

PC Board Layouts (Bottom Views)

1 Form X

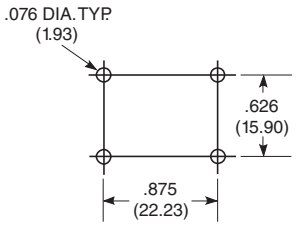

3 Pole Models

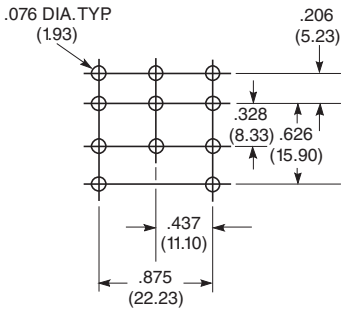

4 Pole Models

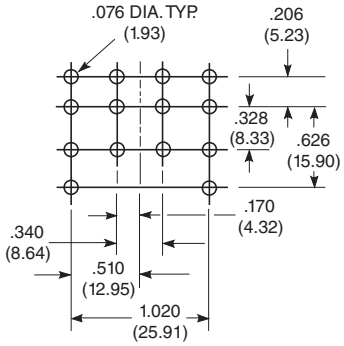

Sockets For KU Series Relays Through 3 Poles

Socket Selection Table

Stock items are boldfaced.

For KUP, KUEP, KUGP, KUIP, and KUMP relays, through 3 poles, with .187" (4.75mm) quick connect termination.

Socket	Socket Termination	Hold-Down Spring
27E043	Solder eyelet	20C228 or 20C254*
27E046	PC board, .144" (3.66mm) terminals	20C228 or 20C254
27E067	.187" (4.75mm) quick connect	20C228 or 20C254
27E121	Screw terminals	20C314 (2 per socket required)
27E305	PC board, .184" (4.67mm) terminals	20C228 or 20C254
27E396	.187" (4.75mm) quick connect*	20C254
27E893	Screw terminals†	20C318

* 20C228 held in place by socket hold-down screw where as 20C254 snaps onto socket.
** Snap-in mounting.
† DIN rail mounting.

Note: All part numbers are RoHS compliant.

Hard Mount Sockets For Relays Through 3 Poles

Nylon sockets with .187" (4.75mm) quick connect, solder or printed circuit terminals are available for KUEP, KUGP, KUIP, KUMP, and KUP relays, through 3 poles, with .187" (4.75mm) quick connect terminals. All are rated 15 amps and UL recognized, File E59244 and CSA certified File LR15734

27E043–with solder eyelet terminals.
27E067–with .187" (4.75mm) quick connect terminals.

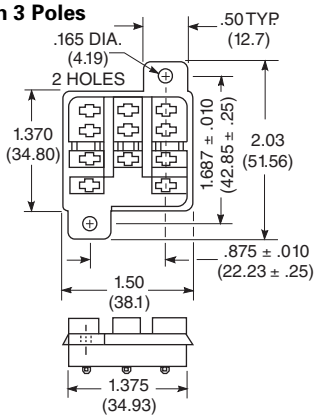

27E043 **27E067**

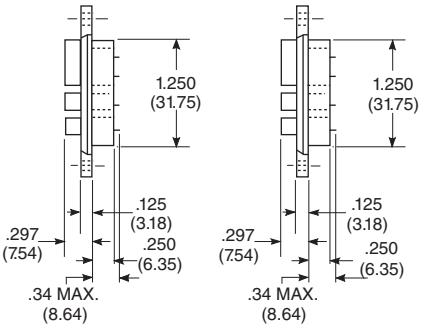

The 27E043 and 27E067 use chassis cutout shown on this page.

27E046, 27E305 Socket With Printed Circuit Terminals

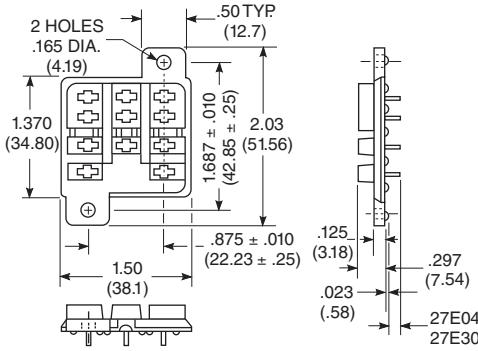

Suggested Socket PC Board Layout

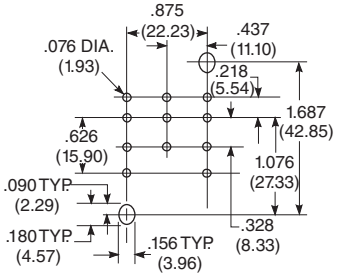

27E396 Snap-In Socket For Relays Through 3 Poles

Nylon snap-in socket with .187" (4.75mm) quick connect terminals is available for KUEP, KUGP, KUIP, KUMP, and KUP relays, through 3 poles, with .187" (4.75mm) quick connect terminals. Snap-in sockets reduce labor by eliminating time consuming screw or rivet mounting. Preassembled wiring harnesses may also be used as the sockets are designed to snap into the chassis from either front or back. All are rated 15 amps and UL recognized, File E59244. The 27E396 uses chassis cutout shown on this page.

27E396–with .187" (4.75mm) quick connect terminals.

Recommended Chassis Cutout For Hard Mount Sockets

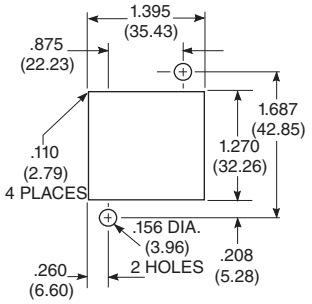

Recommeded Chassis Cutout For Snap-In Sockets

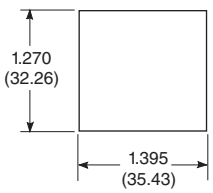

Recommended chassis thickness .031" (.79mm) to .062" (1.57mm).

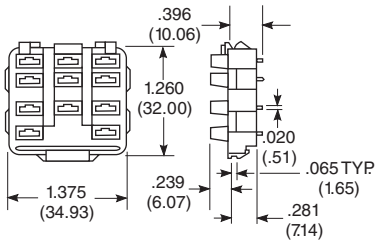

Sockets For KU Series Relays Through 3 Poles (continued)

27E121
Screw Terminal Socket

The 27E121 socket offers screw termination for KUEP, KUGP, KUIP, KUL, KUMP and KUP relays, through 3 poles, with .187" (4.75mm) quick connect terminals. This socket stacks on 1.700" (43.18mm) centers. When surface mounting, two #6-32 screws of suitable length are required. When track mounting, two 24A071 retainer clips (not shown) are required. The 27E121 is rated 15 amps and is UL recognized, File E59244, CSA certified, File LR15734.

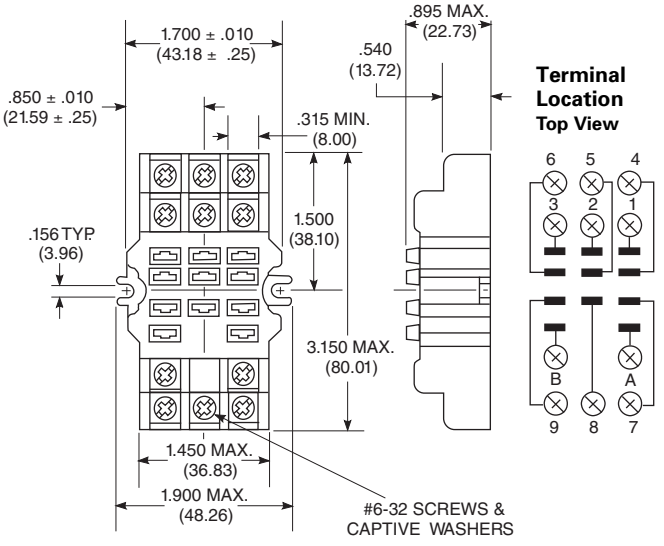

27E893
Screw Terminal, Din Rail Snap-Mount Socket
(use with mounting track 24A110)

The 27E893 DIN rail, snap-mount socket offers screw termination for KUEP, KUGP, KUIP, KUL, KUMP and KUP relays, through 3 poles, with .187" (4.75mm) quick connect terminals. This socket is constructed with a spring-loaded latch which allows it to be quickly snapped onto or removed from a "top hat" style mounting track. No special tools or extra hardware is required for installation. The 27E893 is UL rated 15 amps, 94V-0, File E59244 and CSA rated 10 amps, File LR15734.

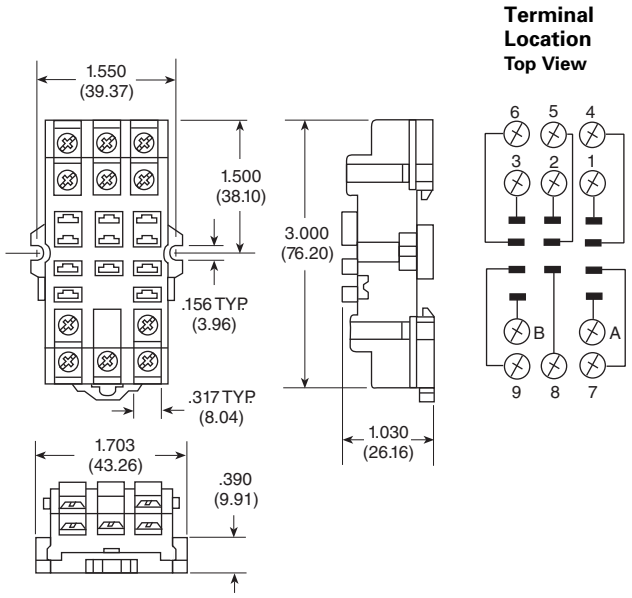

Sockets For KU Series 4 Pole Relays

Socket Selection Table
Stock items are boldfaced.

For 4 pole KUP relays with .110" (2.79mm) quick connect termination.

Socket	Socket Termianation	Hold-Down Spring
27E415	.187" (4.75mm) quick connect	20C228 or 20C254
27E419	PC board	20C228 or 20C254
27E867*	Screw terminals	20C254

* Use 40G432 insulator pad or customer supplied alternative.

Note: All part numbers are RoHS compliant.

Hard Mount Sockets For 4 Pole Relays

27E415–with .187" (4.75mm) quick connect/solder terminals.
27E419–with printed circuit terminals. See PC board layout at right.

Note: Only 4 pole KUP relays with .110" (2.79mm) quick connect terminals can be used with 4 pole hard mount sockets.

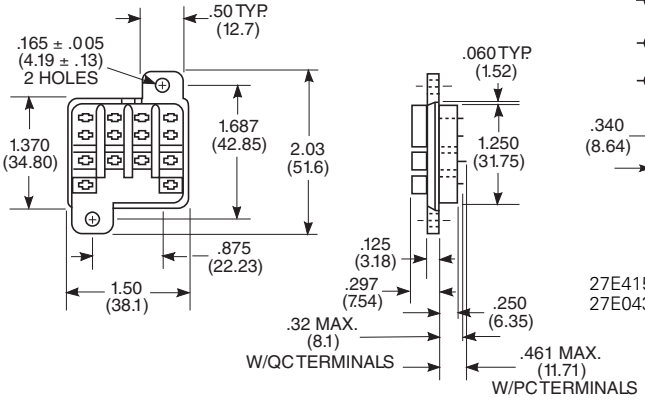

Suggested Socket PC Board Layout

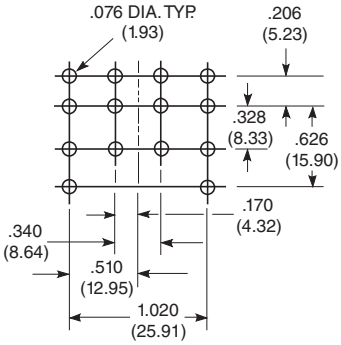

27E415 uses same chassis cutout as 27E043.

Screw Terminal Socket For 4 Pole Relays

27E867 offers screw termination for 4 pole KUP relays with .110" (2.79mm) quick connect/socket mount terminals. Rated 10 amps and is UL recognized, File E59244.

