

SlimSeal SSL Connector

The SlimSeal SSL connectors are low profile, single row connectors developed for indoor and outdoor LED lighting applications. These connectors provide low power, sealed solutions for free hanging, wire-to-wire interconnects and for robust, stable electrical and mechanical wire-to-board connections used in solid state lighting.

TE connectivity

SlimSeal SSL Connector

LIGHTING APPLICATIONS


Channel/Sign



Emergency



Digital Signage

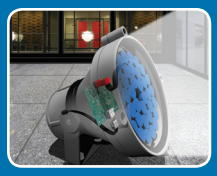
Architectural


Street & Stadium


Commercial Refrigeration

KEY FEATURES

- Available in 1, 2, 3 & 4 positions for use in various lighting and control applications
- 1 position designed for daisy chaining adjacent LED modules in a single fixture
- SMT and thru hole versions permits assembly to SMT metal clad & FR4 thru hole pc boards
- Polarized connections eliminates the possibility of mis-mating connectors
- Positive integral latching prevents inadvertent unmating of connectors
- Pre-assembled seals & wire guides reduces assembly time
- IP67 seal rating for outdoor and commercial refrigeration lighting applications

ELECTRICAL

Operating Current : 5 AMPS (18-20 AWG) & 3.5 AMPS (22-24 AWG)

Maximum Operating Voltage : 400VAC / 400VDC

Dielectric Withstanding Voltage : 1500 VAC

MECHANICAL

Number of positions : 1, 2, 3 and 4

Operating Temperature : -40°C to 105°C

Seal Rating : IP67

Durability : 30 mating cycles

MATERIALS

Housings : UL 94 V0 rated high temperature resistant thermoplastic

Receptacle Contacts : Tin Plated Copper Alloy

Tab Contacts : Tin Plated Brass

Integral Seals : Silicone Rubber

STANDARDS AND SPECIFICATIONS

UL 1977, CSA C22.2 No. 182.3

TE Application Specification : 114-13261

TE Product Specification : 108-2391

Exposure : UL 746C F1 (suitable for outdoor use, wire-to-wire only)

APPLICATION TOOLING

18-20 AWG Tab and Receptacle Terminals

PART NUMBER	DESCRIPTION
2063957-1	Hand Tool
1530177-2	HDI Applicator-Bench Terminator
1530177-1	HDI Applicator-Leadmaker

22-24 AWG Tab and Receptacle Terminals

PART NUMBER	DESCRIPTION
2063956-1	Hand Tool
1530178-2	HDI Applicator-Bench Terminator
1530178-1	HDI Applicator-Leadmaker



PRODUCT DIMENSIONS

Vertical SMT Header

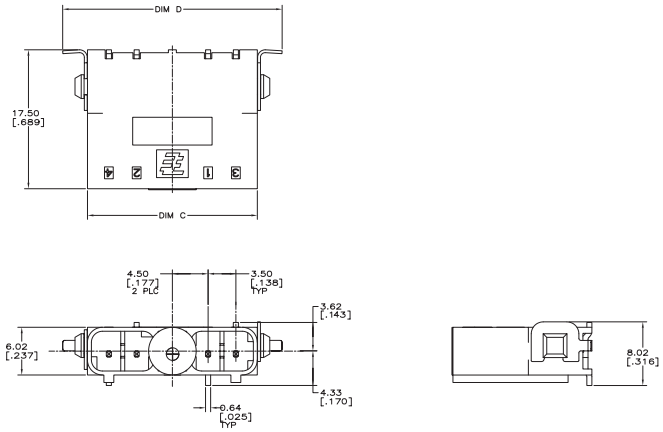

Recommended PCB Layout

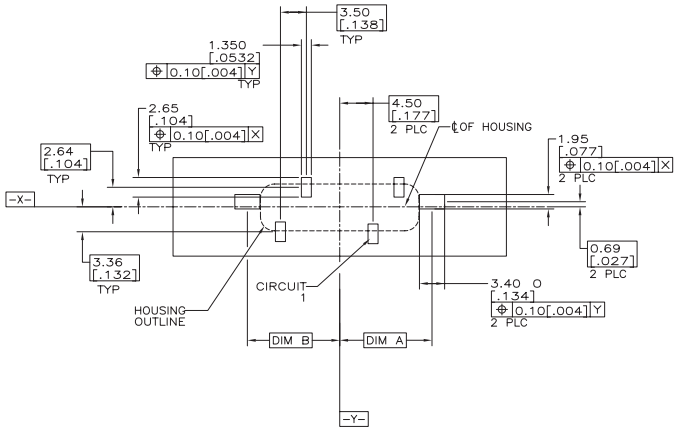

PART NUMBER	POSITION SIZE	DESCRIPTION	DIM "A"	DIM "B"	DIM "C"	DIM "D"
2106053-2	2	SMT Vertical Header	8.96 [.353]	8.96 [.353]	14.40 [.567]	20.65 [.813]
2106053-4	3	SMT Vertical Header	12.46 [.491]	8.96 [.353]	17.90 [.705]	24.15 [.951]
2106053-6	4	SMT Vertical Header	12.46 [.491]	12.46 [.491]	21.40 [.843]	27.65 [1.089]

Right Angle SMT Header

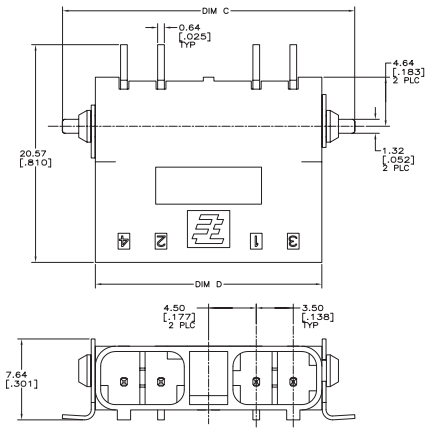

Recommended PCB Layout

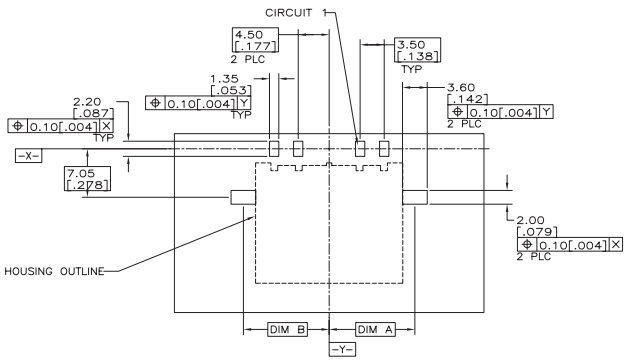

PART NUMBER	POSITION SIZE	DESCRIPTION	DIM "A"	DIM "B"	DIM "C"	DIM "D"
2106056-2	2	SMT Right Angle Header	8.96 [.353]	8.96 [.353]	20.61 [.811]	14.40 [.567]
2106056-5	3	SMT Right Angle Header	12.46 [.491]	8.96 [.353]	24.11 [.949]	17.90 [.705]
2106056-8	4	SMT Right Angle Header	12.46 [.491]	12.46 [.491]	27.61 [1.087]	21.40 [.843]



PRODUCT DIMENSIONS cont.

Vertical Thru Hole Header

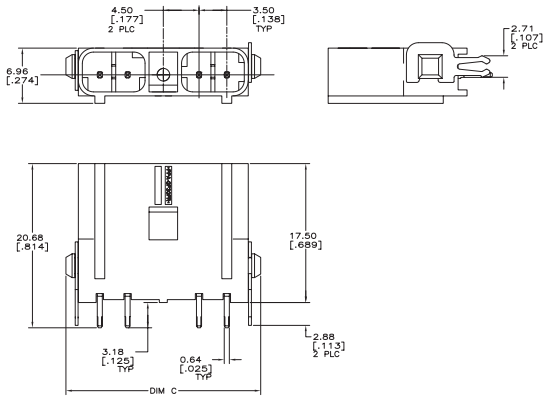

Recommended PCB Layout

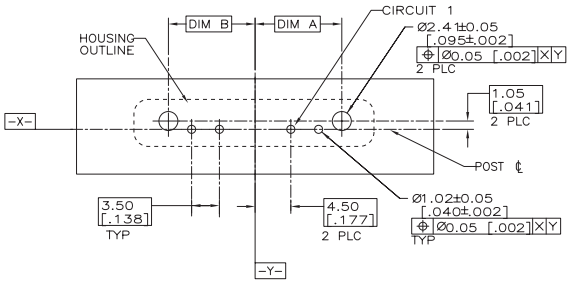

PART NUMBER	POSITION SIZE	DESCRIPTION	DIM "A"	DIM "B"	DIM "C"
2106112-2	2	Vertical Thru Hole Header	7.42 [.292]	7.42 [.292]	17.54 [.691]
2106112-4	3	Vertical Thru Hole Header	10.92 [.430]	7.42 [.292]	21.04 [.828]
2106112-6	4	Vertical Thru Hole Header	10.92 [.430]	10.92 [.430]	24.54 [.966]

Right Angle Thru Hole Header

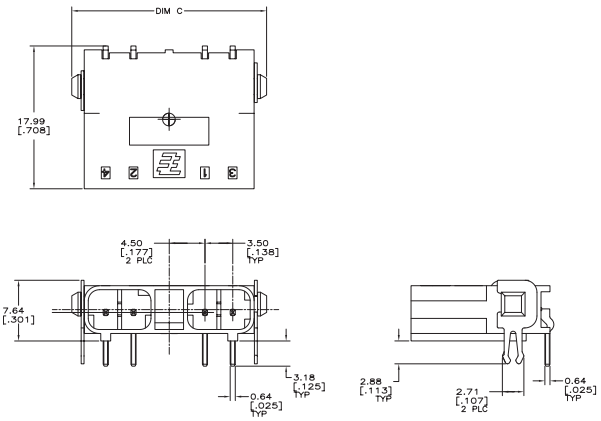

Recommended PCB Layout

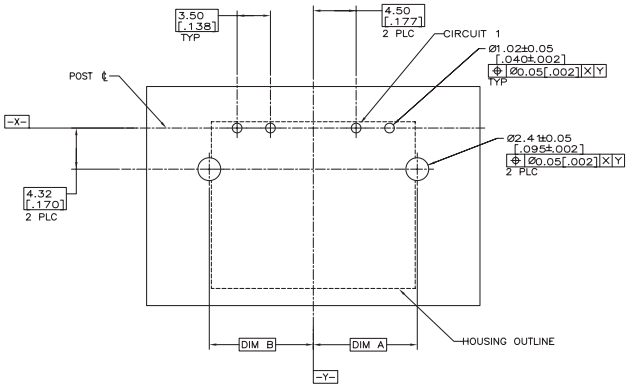

PART NUMBER	POSITION SIZE	DESCRIPTION	DIM "A"	DIM "B"	DIM "C"
2106111-2	2	Right Angle Thru Hole Header	7.42 [.292]	7.42 [.292]	17.54 [.691]
2106111-4	3	Right Angle Thru Hole Header	10.92 [.430]	7.42 [.292]	21.04 [.828]
2106111-6	4	Right Angle Thru Hole Header	10.92 [.430]	10.92 [.430]	24.54 [.966]



PRODUCT DIMENSIONS cont.

Free Hanging Plug Assembly

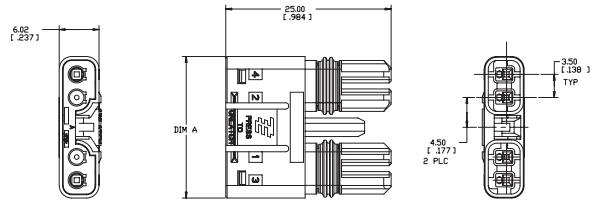

Exploded View

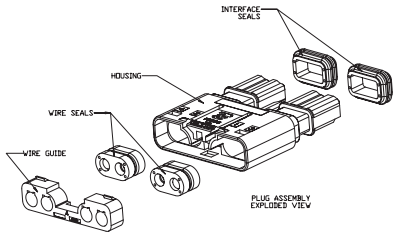

PART NUMBER	POSITION SIZE	DESCRIPTION	DIM "A"
NEW 2154854-1	1	Plug Assembly	6.52 [.257]
2106135-2	2	Plug Assembly	14.40 [.567]
2106135-3	3	Plug Assembly	17.90 [.705]
2106135-4	4	Plug Assembly	21.40 [.843]

Free Hanging Receptacle Assembly

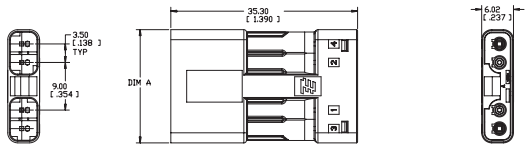

Exploded View

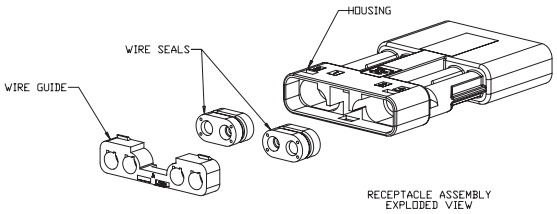

PART NUMBER	POSITION SIZE	DESCRIPTION	DIM "A"
NEW 2154852-1	1	Receptacle Assembly	6.52 [.257]
210636-2	2	Receptacle Assembly	14.40 [.567]
2106136-3	3	Receptacle Assembly	17.90 [.705]
2106136-4	4	Receptacle Assembly	21.40 [.843]

Receptacle Contact

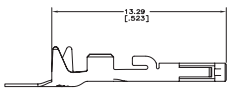

PART NUMBER	DESCRIPTION
2106123-1	18-20 AWG Receptacle Terminal
2106123-2	18-20 AWG Receptacle Terminal (Loose Piece)
1-2106123-1	22-24 AWG Receptacle Terminal
1-2106123-2	22-24 AWG Receptacle Terminal (Loose Piece)

Tab Contact

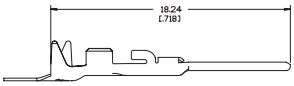

PART NUMBER	DESCRIPTION
2106124-2	18-20 AWG Tab Terminal
2106124-9	18-20 AWG Tab Terminal (Loose Piece)
2-2106124-2	22-24 AWG Tab Terminal
2-2106124-7	22-24 AWG Tab Terminal (Loose Piece)

Cable Assemblies

PART NUMBER	POSITION	DESCRIPTION
NEW 2106378-1	1	101.60 [4.000] Plug Cable Assembly
2106378-2	2	101.60 [4.000] Plug Cable Assembly
2106378-3	3	101.60 [4.000] Plug Cable Assembly
2106378-4	4	101.60 [4.000] Plug Cable Assembly

PART NUMBER	POSITION	DESCRIPTION
NEW 2106391-1	1	101.60 [4.000] Receptacle Cable Assembly
2106391-2	2	101.60 [4.000] Receptacle Cable Assembly
2106391-3	3	101.60 [4.000] Receptacle Cable Assembly
2106391-4	4	101.60 [4.000] Receptacle Cable Assembly

Questions to ask at design in

What wire gauge and insulation type will you be using?
The connectors accepts 18 -20 AWG and 22 – 24 AWG stranded wire with a wire varying maximum insulation outside diameters per wire gauge.

What special retention mechanisms are available to ensure stability on the printed circuit board?
The vertical and right angle SMT headers have surface mount hold downs whereas the vertical and right angle thru hole headers have board locks to provide stability during mating and un-mating.

What prevents the connectors from being disconnected unintentionally?
The connectors are snag resistant and have an integral, flush mounted, actuated latch that prevents inadvertent un-mating of the connectors.

Is your manufacturing process automated?
The SMT headers are manufactured in high temperature material for reflow processing and tape and reel packaged for high speed SMT processing.

What application tooling options are available?
Hand tools are available for product evaluation and/or low volume production using loose piece terminals. Applicators are available for mid to high volume production terminals on reel using bench top semi-automatic presses or fully automated lead makers.

What mechanical and electrical testing has the connectors been subjected to?
The TE Product Specification 108-2391 provides a summary of the test groups, sequences and results that the product was subjected to during product qualification testing.

What version of the header assemblies, vertical or right angle, are more widely accepted?
Right angle surface mount headers are more often chosen because they provide a more robust, low profile connection to the printed circuit board. Vertical headers are chosen if limited space is available to mate the plug connection in the final assembly

FOR MORE INFORMATION : te.com/lighting

TE Technical Support Center

interner:	te.com/help
USA:	+1 (800) 522-6752
Canada:	+1 (905) 475-6222
Mexico	+52 (0) 55-1106-0800
Latin/S. America:	+54 (0) 11-4733-2200
Germany:	+49 (0) 6251-133-1999
UK:	+44 (0) 800-267666
France:	+33 (0) 1-3420-8686
Netherlands:	+31 (0) 73-6246-999
China:	+86 (0) 400-820-6015

Part numbers in this brochure are RoHS Compliant*, unless marked otherwise.
*as defined www.te.com/leadfree

te.com

© 2013 Tyco Electronics Corporation, a TE Connectivity Ltd. Company. All Rights Reserved.
4-1773455-9 PDF JG6 04/2013
TE Connectivity, TE connectivity (logo) and TE (logo) are trademarks. Other logos, product and/or company names might be trademarks of their respective owners.

While TE has made every reasonable effort to ensure the accuracy of the information in this brochure, TE does not guarantee that it is error-free, nor does TE make any other representation, warranty or guarantee that the information is accurate, correct, reliable or current. TE reserves the right to make any adjustments to the information contained herein at any time without notice. TE expressly disclaims all implied warranties regarding the information contained herein, including, but not limited to, any implied warranties of merchantability or fitness for a particular purpose. The dimensions in this catalog are for reference purposes only and are subject to change without notice. Specifications are subject to change without notice. Consult TE for the latest dimensions and design specifications.