THIS DRAWING IS UNPUBLISHED. RELEASED FOR PUBLICATION 20
© COPYRIGHT 20 BY - ALL RIGHTS RESERVED.

LOC	DIST
–	–

REVISIONS

P	LTR	DESCRIPTION	DATE	DWN	APVD
	B	REVISED	05JUNE2013	IC.K	JH.K
	C	REVISED	10JUNE2013	IC.K	JH.K
	C1	REVISED	25FEB2014	IC.K	JH.K
	C2	REVISED	05FEB2015	IC.K	JH.K

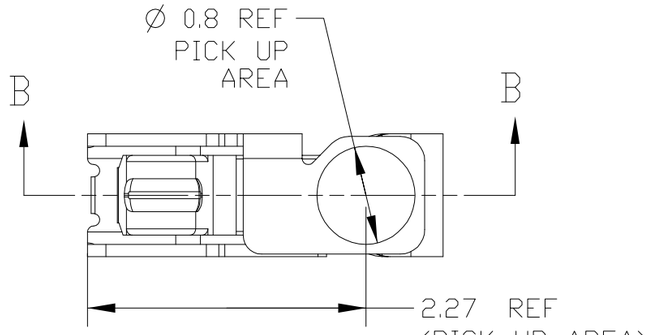

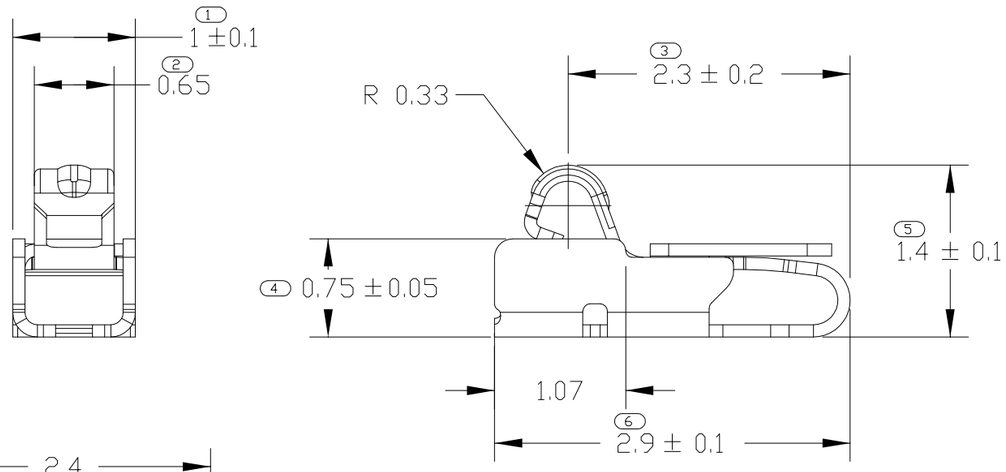

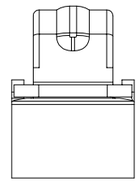

AS SHOWN
C1 2108610-5/6
C2 2-2108610-6

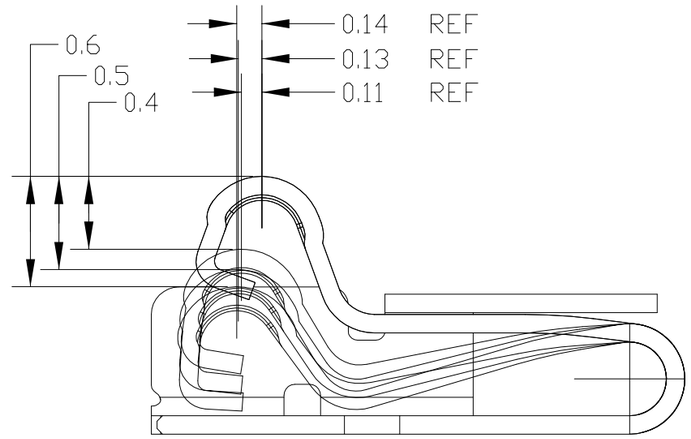

STROKE CONDITION (REFERENCE)
SECTION B-B

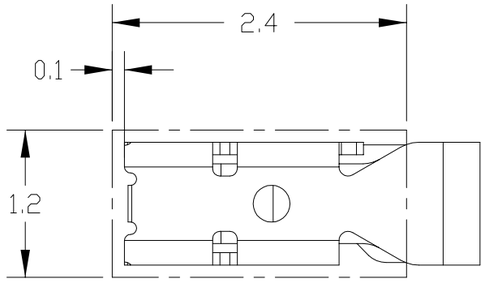

RECOMENDED PCB LAYOUT
(REFERENCE)

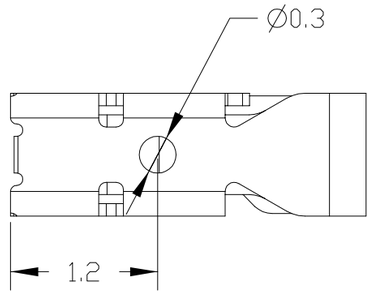

1. MATERIAL: COPPER ALLOY, THK.=0.1mm (7)
2. FINISH: Ni UNDER PLATING ALL OVER 0.8~3.0um.
   CONTACT PLATING: Au 0.1~0.4um
   SOLDER PLATING: Au FLASH 0.05~0.35um
3. CUTTING BURR: 0.05mm MAX.
C1 4. F/G SHOULD BE SEPARATED BASED ON THE CUSTOMER'S PART NUMBER AS BELOW TABLE

NO	PART NUMBER	CUSTOMER PART NUMBER	PRODUCT SPEC
1	2108610-5	MBV62562001	108-61185
2	2108610-6	EAG63652301	
C2 3	2-2108610-6	–	108-61250

THIS DRAWING IS A CONTROLLED DOCUMENT.

DIMENSIONS: mm

TOLERANCES UNLESS OTHERWISE SPECIFIED: ±0.15

~~0 PLC~~	~~±~~
~~1 PLC~~	~~±0.5~~
~~2 PLC~~	~~±0.13~~
~~3 PLC~~	~~±0.013~~
~~4 PLC~~	~~±0.0001~~
~~ANGLES~~	~~±~~

MATERIAL – 1

FINISH – 2

DWN	JH GONG	08FEB2013
CHK	JH KIM	08FEB2013
APVD	JH KIM	08FEB2013
PRODUCT SPEC	SEE TABLE 4	
APPLICATION SPEC	–	
WEIGHT	–	

TE Connectivity

NAME: SPRING FINGER 1.4H

SIZE	CAGE CODE	DRAWING NO	RESTRICTED TO
A3	00779	C-C_2108610	–

CUSTOMER DRAWING | SCALE 20:1 | SHEET 1 OF 3 | REV C2

THIS DRAWING IS UNPUBLISHED. RELEASED FOR PUBLICATION 20
© COPYRIGHT 20 BY - ALL RIGHTS RESERVED.

LOC	DIST
–	–

REVISIONS

P	LTR	DESCRIPTION	DATE	DWN	APVD
		SEE SHEET 1			

C1 4 <2108610-5 : MBV62562001>

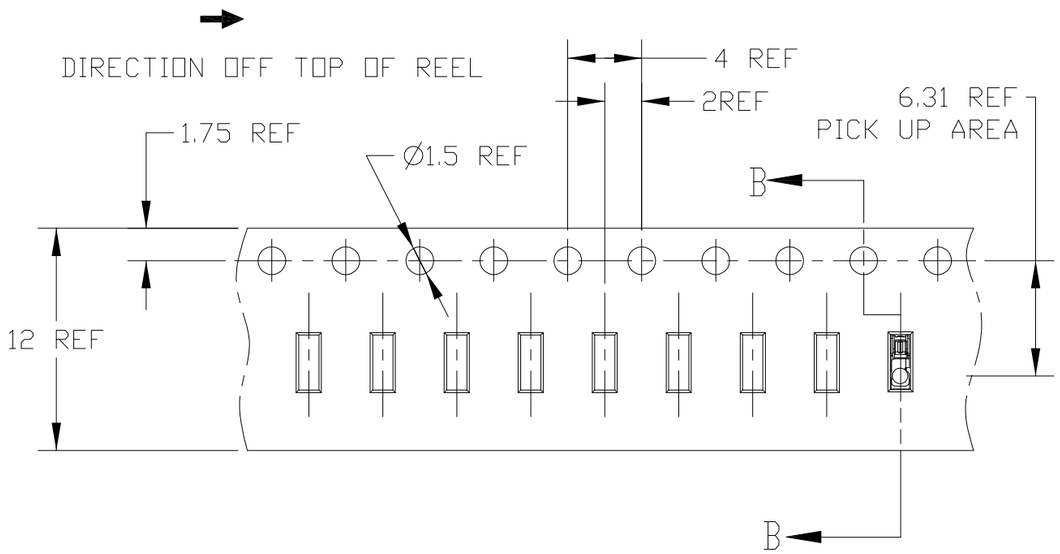

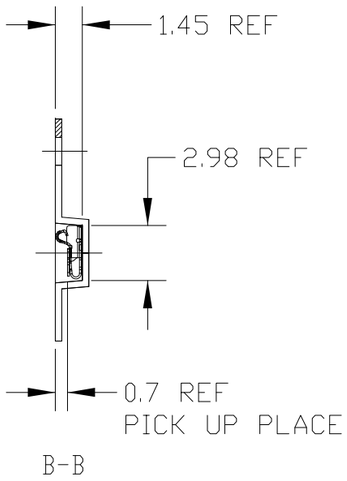

B-B

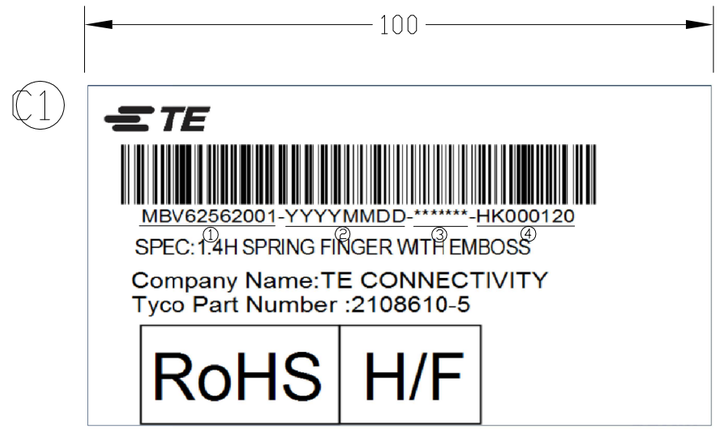

1. LG PART NO. 2. FINAL INSPECTION(YYMMDD)
3. VENDOR PRODUCTION LOT NO. 4. VENDOR CODE

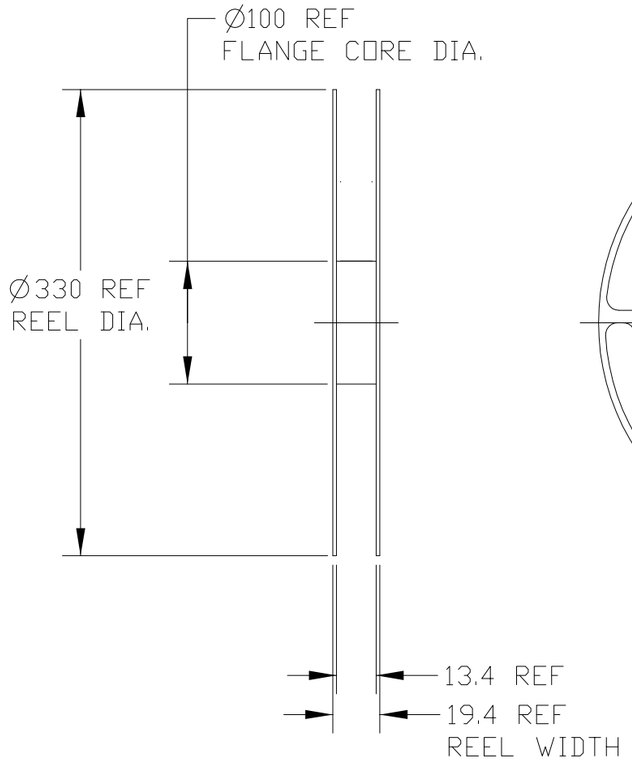

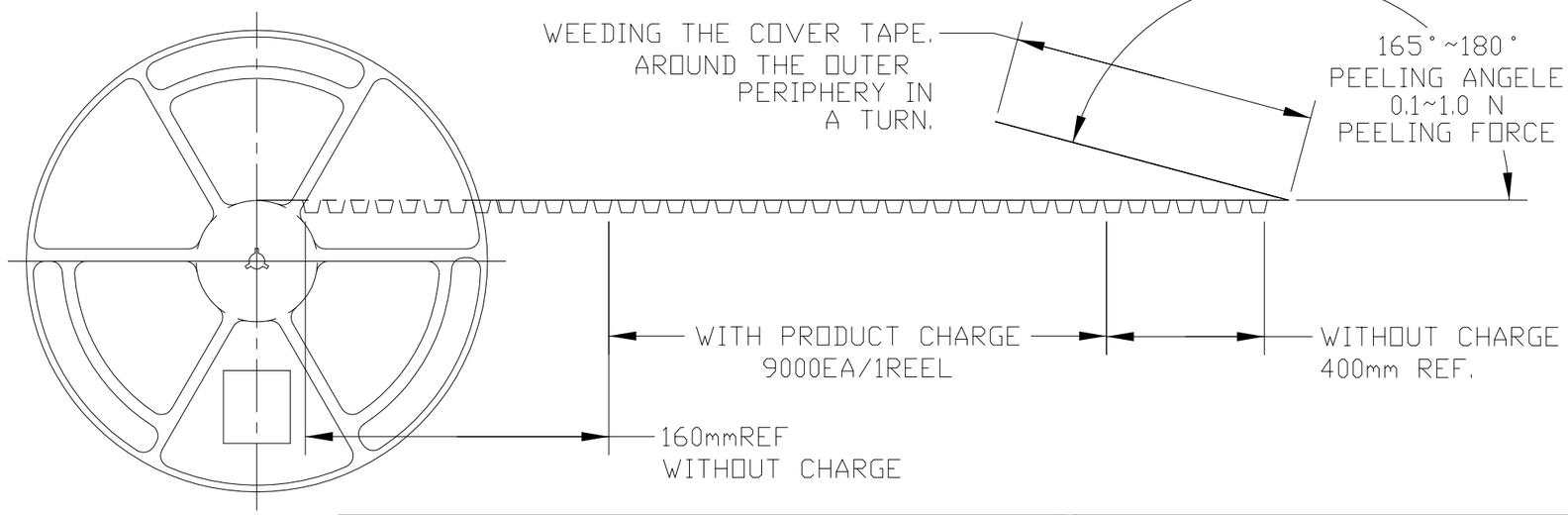

THIS DRAWING IS A CONTROLLED DOCUMENT.

DIMENSIONS:	TOLERANCES UNLESS OTHERWISE SPECIFIED:
mm	0 PLC ±- 1 PLC ±0.5 2 PLC ±0.13 3 PLC ±0.013 4 PLC ±0.0001 ANGLES ±-
MATERIAL –	FINISH –

DWN	JH GONG	08FEB2013
CHK	JH KIM	08FEB2013
APVD	JH KIM	08FEB2013
PRODUCT SPEC	108-XXXXX	
APPLICATION SPEC	–	
WEIGHT	–	

TE Connectivity

NAME: SPRING FINGER 1.4H

SIZE	CAGE CODE	DRAWING NO	RESTRICTED TO
A3	00779	C-C_2108610	–

CUSTOMER DRAWING | SCALE 20:1 | SHEET 2 OF 3 | REV C2

THIS DRAWING IS UNPUBLISHED. RELEASED FOR PUBLICATION 20
© COPYRIGHT 20 BY - ALL RIGHTS RESERVED.

LOC	DIST
–	–

REVISIONS

P	LTR	DESCRIPTION	DATE	DWN	APVD
		SEE SHEET 1			

C1 4 <2108610-6 : EAG63652301>

DIRECTION OFF TOP OF REEL

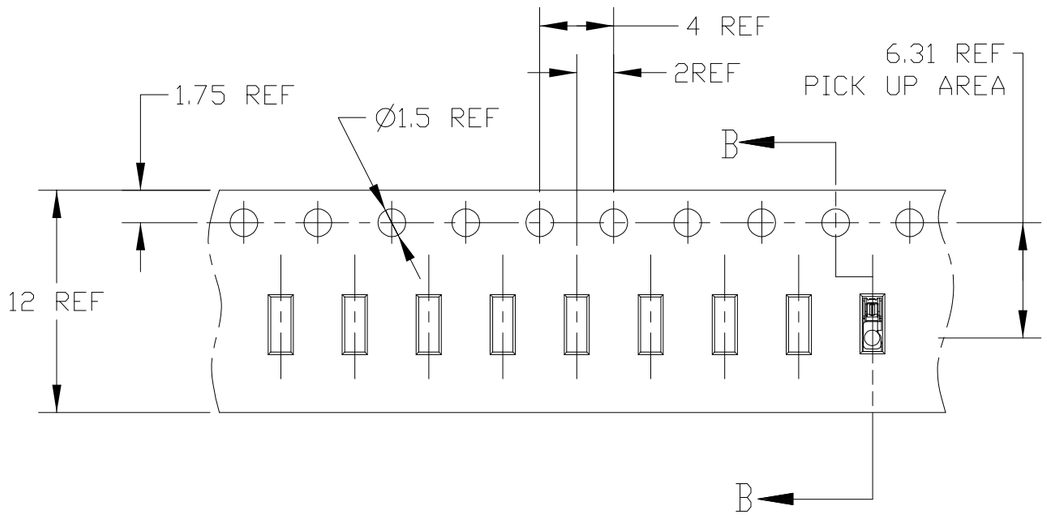

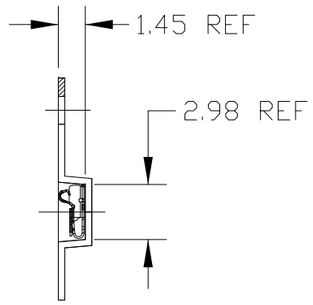

B-B

C1

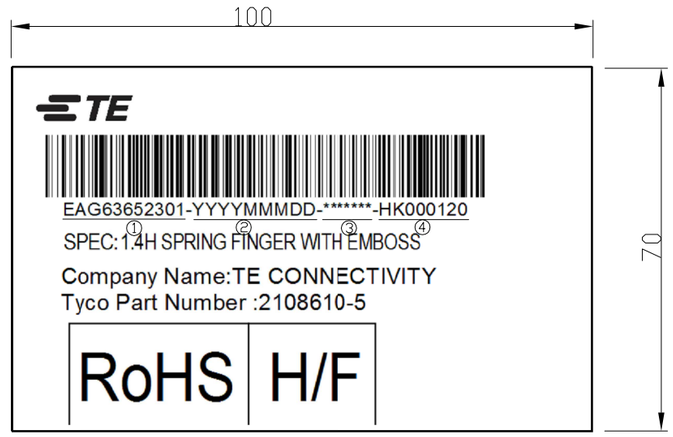

1. LG PART NO. 2. FINAL INSPECTION(YYMMDD)
3. VENDOR PRODUCTION LOT NO. 4. VENDOR CODE

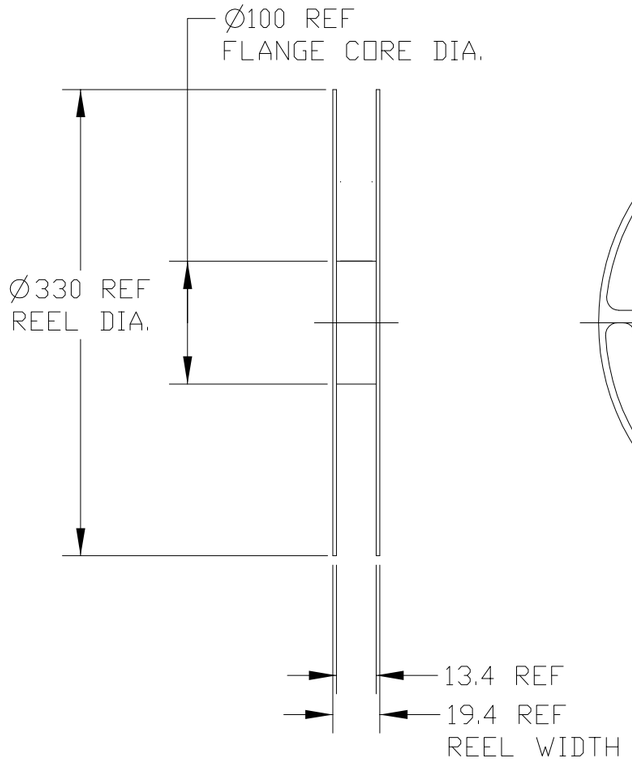

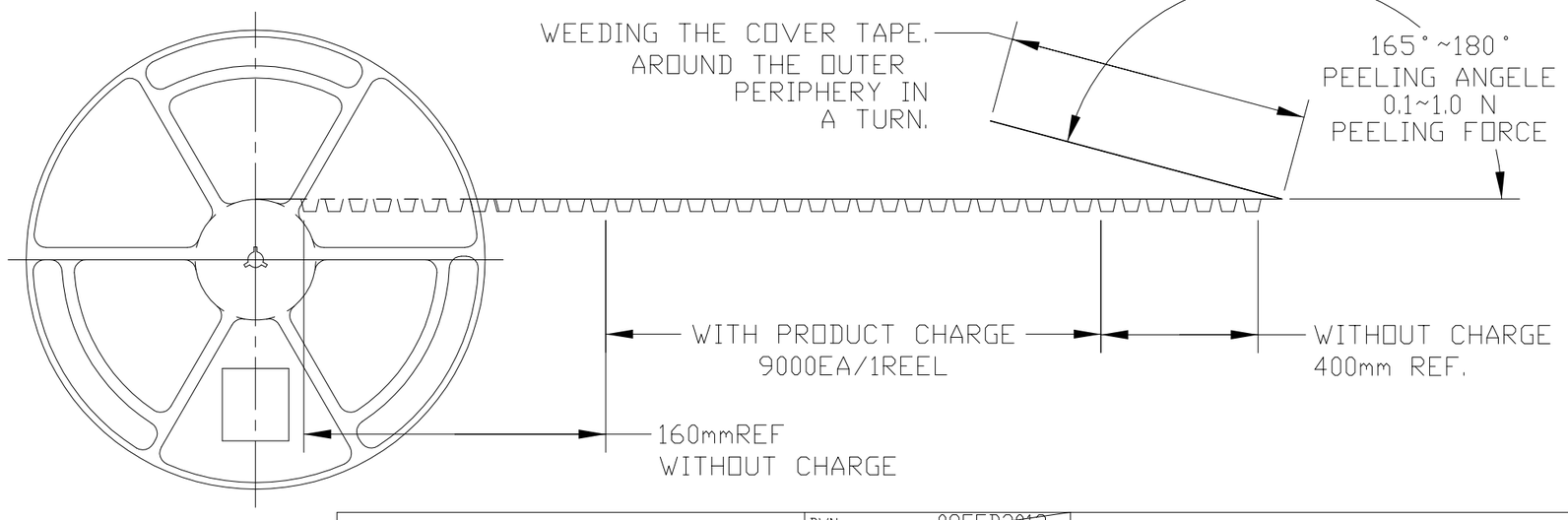

THIS DRAWING IS A CONTROLLED DOCUMENT.

DIMENSIONS: mm

TOLERANCES UNLESS OTHERWISE SPECIFIED:

0 PLC	±-
1 PLC	±0.5
2 PLC	±0.13
3 PLC	±0.013
4 PLC	±0.0001
ANGLES	±-

MATERIAL –

FINISH –

DWN	JH GONG 08FEB2013
CHK	JH KIM 08FEB2013
APVD	JH KIM 08FEB2013
PRODUCT SPEC	108-XXXXX
APPLICATION SPEC	–
WEIGHT	–

TE Connectivity

NAME: SPRING FINGER 1.4H

SIZE	CAGE CODE	DRAWING NO	RESTRICTED TO
A3	00779	C-C_2108610	–

CUSTOMER DRAWING | SCALE 20:1 | SHEET 3 OF 3 | REV C2