

RF Coax Products

RoHS Ready

Tyco Electronics

Our commitment. Your advantage.

Introduction

Product Facts

- **Listed under the Component Program of Underwriters Laboratories Inc., File No. E-81956 as indicated by Product Family**
- **Recognized under the Component Program of Underwriters Laboratories Inc., File No. E-81956 as indicated by Product Family**
- **Certified by Canadian Standards Association File No. LR 7189 as indicated by Product Family**
- **Produced under a Quality Management System certified to ISO 9001**

A copy of the certificate is available upon request

The Tyco Electronics RF Coaxial catalog combines the best products from industry leading brand names like M/A-COM and AMP. We have integrated these into one cohesive set of RF products focused specifically on wireless, wireline carrier, and enterprise networking sectors of the world telecom equipment market.

Tyco Electronic's broadest selection of RF connectors and coaxial cable assemblies provides you with a solution for every interconnection requirement. Type N and 7/16 connectors are used where high power and rugged reliability are required, typically as antenna feeds, filter/combiner I/O's, and power amplifier outputs. SMA, SMB, and TNC connectors are the primary cable interface for inner cabinet routing and are available in panel mount, board mount, and cable terminations. Subminiature connectors such as MCX, SMP, DIN, and BlindMate provide panel to board and backplane connections. Finally, our micro miniature SSMT, and MMCX series provide excellent board to board and card edge to board solutions.

All of these interfaces are supported with cable terminating tools and between series adapters to meet all your requirements for trouble free terminations at the lowest applied cost. The appendices hold a wealth of information including a Theory and Application tutorial, RG/U cable specification tables, Application notes on White Bronze plating and intermodulation distortion.

Whether you need rugged external RF power cables, panel mount, board to board, blindmate, or DIN, Tyco Electronics has the connection.

How to Use This Catalog

Based on the communications gear that you are designing:

- Wireless Basestations
- Carrier Rack Equipment
- Chassis Set Top Box
- NIC Card

Typical equipment drawings on pages 306-309 guide you to the interconnect section(s) in this catalog.

Selection guides will direct you to products based on performance and mechanical requirements such as impedance, VSWR, max. frequency, power handling, etc.

There are other guides to help you find the right connection: A table of contents listed by interface type, a complete connector type selector describes each interface with typical applications, and a mini-selection guide shows key parameters to quickly pinpoint the right connector type.

Need more information?

Call Technical Support at the numbers listed below.

Technical Support is staffed with specialists well versed in all Tyco Electronics products. They can provide you with:

- Technical Support
- Catalogs
- Technical Documents
- Product Samples
- Tyco Electronics Authorized Distributor Locations

Restriction on the use of Hazardous Substances (RoHS)

At Tyco Electronics, we're ready to support your RoHS requirements. We've assessed more than 1.5 million end items/components for RoHS compliance, and issued new part numbers where any change was required to eliminate the restricted materials. Part numbers in this catalog are identified as:

RoHS Compliant — Part numbers in this catalog are RoHS Compliant, unless marked otherwise. These products comply with European Union Directive 2002/95/EC as amended 1 January 2006 that restricts the use of lead, mercury, cadmium, hexavalent chromium, PBB, and PBDE in certain electrical and electronic products sold into the EU as of 1 July 2006.

NOTE: For purposes of this Catalog, included within the definition of RoHS Compliant are products that are clearly "Out of Scope" of the RoHS Directive such as hand tools and other non-electrical accessories.

Non-RoHS Compliant — These part numbers are identified with a "◆" symbol. These products do not comply with the material restrictions of the European Union Directive 2002/95/EC.

NOTE: Information regarding RoHS compliance is provided based on reasonable inquiry of our suppliers and represents our current actual knowledge based on the information provided by our suppliers. This information is subject to change. For latest compliance status, refer to our website referenced at right.

Getting the Information You Need

Our comprehensive on-line RoHS Customer Support Center provides a forum to answer your questions and support your RoHS needs. A RoHS FAQ (Frequently Asked Questions) is available with links to more detailed information. You can also submit RoHS questions and receive a response within 24 hours during a normal work week. The Support Center also provides:

- Cross-Reference from Non-compliant to Compliant Products
- Ability to browse RoHS Compliant Products in our on-line catalog
- Downloadable Technical Data Customer Information Presentation
- More detailed information regarding the definitions used above
- So whatever your questions when it comes to RoHS, we've got the answers at www.tycoelectronics.com/leadfree

RoHS Customer Support Center

Catalog 1307191
Revised 3-07

www.tycoelectronics.com

Dimensions are in millimeters and inches unless otherwise specified. Values in brackets are standard equivalents.

Dimensions are shown for reference purposes only. Specifications subject to change.

USA: 1-800-522-6752
Canada: 1-905-470-4425
Mexico: 01-800-733-8926
C. America: 52-55-1106-0803

South America: 55-11-2103-6000
Hong Kong: 852-2735-1628
Japan: 81-44-844-8013
UK: 44-8706-080-208

RF Catalog Table of Contents

Miniature Connectors
7-16 Series Connectors 7-11
Lightning Protection Connectors 12-19
Surge Protectors 12-15
λ/4 Wave Stub Tuners 16-19
N Series Connectors 20-25
Quick Lock N (QLN) Series Connectors 26-28
TNC Connectors 29-43
BNC Connectors 44-77
Mini BNC Connectors 78-81
Decoupled Connectors 82-87
Self-Terminating PC Board Connectors 88
Twin BNC Connectors 89-92
F Series and G Series Connectors 93-99

Subminiature Connectors
SMA Connectors 100-123
QMA Connectors 124-128
DIN Connectors 129-156
Series 1.0/2.3 129-137
Series 1.6/5.6 138-146
Measurement Accessories 147-150
Coaxial Cables 151
SMP Connectors 152-156
Blind Mate Connectors 157-175
OSP Miniature Blind Mate Connectors 157-168
OSSP Subminiature Blind Mate Connectors 169-175
SMB Connectors 176-192
SMC Connectors 193-195
MCX Connectors 196-203
Compression Coax Board-to-Board Connectors 204
STAX Coax Connectors 205, 206

Micro Miniature RF Coax Connectors
SMT/QuickGrip Connectors 207-211
SSMT Connectors 212-217
MMCX Connectors 218-221
UMCC Connectors 222-228
Switching Coax Connectors 229-236
Quick Snap Stripline (QSL) Connectors 237

Multi Position Connectors
DIN Inserts 238-241
Size 8 Contacts 242, 243
COAXICON Contacts 244-248
SIEMAX Connectors 249, 250

Between Series Adapters 251-260

Coaxial Terminations 261

Application Tooling 262-268

Cable Assembly Capabilities 269-271

Appendix
A - Theory and Application 272-277
B - White Bronze Application Note 278-280
C - Intermodulation Application Note 281-283
D - Typical Coaxial Cable Specifications 284-298
E - Maximum Power Handling Capabilities for Cables 299
F - Nominal Loss Characteristics for Cables 300
G - Glossary of Terms 301-305

RF Coaxial Solutions for Communications Equipment Overview 306-309

RoHS Compliant to Non-RoHS Compliant Part Number Cross Reference 310-312

M/A-COM Part Number Cross Reference 313, 314

Part Number Index 315-318

Disclaimer

While Tyco Electronics Corporation and its affiliates referenced herein ("Tyco Electronics") have made every reasonable effort to ensure the accuracy of the information in this catalog, Tyco Electronics does not guarantee that it is error-free, nor does Tyco Electronics make any other representation, warranty or guarantee that the information is accurate, correct, reliable or current.

Tyco Electronics reserves the right to make any adjustments to the information contained herein at any time without notice. Tyco Electronics expressly disclaims all implied warranties regarding the information contained herein, including, but not limited to, any implied warranties of merchantability or fitness for a particular purpose. Tyco Electronics' only obligations are those in the Tyco Electronics Standard Terms and Conditions of Sale, and in no case will Tyco Electronics be responsible for any incidental, indirect, or consequential damages arising from the sale, resale, use, or misuse of its products. Users should independently evaluate the suitability of, and test each product for, their application.

The dimensions, specifications, designs, construction, materials and processes in this catalog are for reference purposes only and are subject to change without notice. Please consult Tyco Electronics for the most current product information.

The export of certain Tyco Electronics products is restricted by the Arms Export Control Act (Title 22, U.S.C. Sec 2751, et seq.) or the Export Administration Act of 1979, as amended (Title 50, U.S.C., App. 2401 et seq.). Orders may be subject to export approval by the U.S. Government. Buyer must comply with all applicable export laws of all applicable jurisdictions.

© Copyright 2007, 2000, 1998, 1994, 1992, 1990, and 1982 by Tyco Electronics Corporation.
All International Rights Reserved.

ACTION PIN, AMP, AMP-HDI, AMPLIMITE, AMP-O-LECTRIC, CERTI-CRIMP, COAXICON, M/A-COM, OSP, OSSP, PIDG, PRO-CRIMPER, RAYCHEM, SIEMAX, SMT/QuickGrip, SOLISTRAND, STAX, TE LOGO, TYCO ELECTRONICS and Z-PACK are trademarks.

AT&T is a trademark of AT&T Corporation.

BELDEN is a trademark of Belden Wire and Cable Company.

BERK-TEK is a trademark of Nexans, Inc.

COMM/SCOPE is a trademark of Commscope, Inc.

DANIELS is a trademark of Daniels Manufacturing Corporation.

GPO is a trademark of Corning Gilbert, Inc.

HIROSE is a trademark of Hirose Electric.

MURATA is a trademark of Murata Electronics, Inc.

ROLM is a trademark of the Rolm Corp.

TPX is a trademark of Mitsui Chemicals America, Inc.

TROMPETER is a trademark of Trompeter Electronics, Inc.

VALOX is a trademark of General Electric Company.

Other products, logos, and company names mentioned herein may be trademarks of their respective owners.

See inside back cover for Global Contacts and phone numbers.

Catalog 1307191
Revised 3-07

www.tycoelectronics.com

Dimensions are in millimeters and inches unless otherwise specified. Values in brackets are standard equivalents.

Dimensions are shown for reference purposes only. Specifications subject to change.

USA: 1-800-522-6752
Canada: 1-905-470-4425
Mexico: 01-800-733-8926
C. America: 52-55-1106-0803

South America: 55-11-2103-6000
Hong Kong: 852-2735-1628
Japan: 81-44-844-8013
UK: 44-8706-080-208

Connector Selection

Connector Types

7-16 Series connectors are designed for medium to high power applications such as cellular base stations, control components, antenna and broadcast. The 7-16 Series minimizes intermodulation distortion by white bronze or silver plating the electrical path. Combined hex/knurl coupling nuts allow for manual or torque tightening, further reducing distortion by providing a strong butt joint.

Lightning Protection devices have an integral surge arrestor capsule which is designed to protect equipment from high current pulses. It is effective against very fast rise times as induced by electromagnetic pulses from nuclear explosions (NEMP) and the slower pulses arising from lightning strikes (LEMP).

N Series threaded connectors have an air dielectric interface and are low cost. These connectors operate to 11 GHz and are commonly used in cable-based local-area networks (LAN's) medium power transmitters, and base station antenna applications.

TNC connectors have an interface similar to BNC except for a threaded coupling nut. The tighter fit provided by this screw-on connection improves interface control allowing connectors to operate up to 11 GHz. TNC connectors are excellent for mobile units where top-notch performance is required under vibration.

BNC connectors offer easy engagement and disengagement using bayonet couplings and overlapping dielectrics. They are most useful for frequently coupled and uncoupled RF connections with frequencies below 4 GHz. BNC connectors find applications in flexible networks, instrumentation, and computer peripheral interconnections.

F & G Series connectors offer enhanced performance beyond 1 GHz. Designed to meet the rigorous requirements of Bellcore TA-NWT-001503 and SCTE specifications, the F & G series provides high current carrying capabilities in both sealed and un-sealed configurations. Plugs, jacks and adapters are available in threaded and push-on versions. These connectors meet the evolving needs of the communications industry for increased reliability and performance.

SMA threaded connectors are widely used in microwave communications. Connectors operate to at least 12.4 GHz on flexible coax cables, and up to 26.5 GHz on semi-rigid coax cables. Crimp-on SMA connectors that operate to 26.5 GHz are available.

Blind Mate connectors operate to 22 GHz for OSP connectors, 28 GHz for OSSP connectors, and 40 GHz for SMP style connectors. These connectors offer easy slide-on connection and require less alignment between the cable and the equipment than other connectors with comparable band width. Blind Mate connectors are widely used as coaxial interconnects between plug-in modules and motherboards when axial and radial misalignments are necessary.

SMB connectors feature a snap coupling for fast connection. A self centering outer spring and overlapping dielectric allows easy snap-on and excellent performance even in moderate vibration. The SMB is smaller in size than the SMA and excellent where engineers are concerned about circuit miniaturization. Typical application is inter- or intra-board connection of RF or digital signals. Commercial 50 ohm versions operate to 4 GHz, and 75 ohm versions reach 2 GHz.

MCX connectors offer a high reliability, space saving sub-miniature coaxial cable to cable and cable to board interconnection system. The MCX connectors impedance types are applicable up to 6 GHz.

Surface Mount (SMT) connectors. The RF solution to the communication and information age. Tyco Electronics' SSMT and SMT Quick Grip connectors are designed to meet the growing demand for surface mount RF connector technology. These connectors operate up to 6 GHz utilizing cable assembly design to terminate to SMT connectors. Surface mount connectors contribute to high density packaging and high volume manufacturing requirements.

Multi Position connectors. These connector series, including the 1.0/2.3 (CECC 22230), 1.6/5.6 (CECC 22240), Subminiature D (DIN 41652 and CECC 75 301-082), and Tyco Electronics' own SIEMAX multi coax connector series offer the customer a broad choice of options where density and performance are a major concern. The 1.0/2.3 series contacts are available in both 50 and 75 Ohm versions and are designed for use to 10 GHz. The different types of coupling mechanisms, such as screw on, slide-in and latching coupling provide for a variety of space-saving installations. The connector series 1.6/5.6 has been modified to incorporate improved technical advantages. A 75 Ohm design for use up to 8 GHz, it offers excellent screening effectiveness and is a most suitable component for those applications where the transmission of high bit rates is required. In Subminiature D type connectors these interfaces provide good electrical grounding and electromagnetic shielding in a small package size. These plug connectors address the increasing demands related to EMC (electromagnetic compatibility) and RFI (immunity to radiated noise), and are widely used as interface connectors in office and data systems, telecommunications equipment, and in measurement and control systems. Tyco Electronics' SIEMAX connectors combine the benefits of surface mount technology and modular design. This 75 Ohm connector series operates up to 2 GHz and offers a compact grid pitch of 10mm. Its uses include multiplex and high-density systems, and Base Station applications.

Miscellaneous connector types include multiple-circuit connectors that use coaxial contacts in a pin-and-socket configuration, crimp-on ferrules that offer fast, reliable connections for attaching one or more ground taps to shielded wire and braided shield terminations for connecting cable shields to pc boards. Also available are network/premises interconnect products for Ethernet/IEEE 802.3 systems and coaxial taps for simple, dependable connections from transceiver to LAN without cutting the cable.

Catalog 1307191
Revised 3-07

www.tycoelectronics.com

Dimensions are in millimeters and inches unless otherwise specified. Values in brackets are standard equivalents.

Dimensions are shown for reference purposes only. Specifications subject to change.

USA: 1-800-522-6752
Canada: 1-905-470-4425
Mexico: 01-800-733-8926
C. America: 52-55-1106-0803

South America: 55-11-2103-6000
Hong Kong: 852-2735-1628
Japan: 81-44-844-8013
UK: 44-8706-080-208

Connector Selection Guide

Product	Nominal Impedance Ohms	Maximum Frequency GHz	Temperature Rating C	Cable Retention lb	Cable Retention [N]	Coupling Mechanism	Maximum Peak Voltage	Durability Cycles	Connector Body Finish	Page No.
7-16 Series	50	7	-55° to +155°	RG8A/U	—	Threaded	4000	500	White Bronze	7
Lightning Protection	50	2.5	-45° to +85°	Adapter	—	Threaded	650	500	White Bronze	12
N Series Commercial	50	11	-65° to +85°	90 (RG-214/U)	400.3	Threaded	1000	500	Nickel	20
TNC Single Crimp	50	7	-65° to +165°	60 (RG-58C/U)	266.9	Threaded	500	500	Silver	29
TNC Dual Crimp	50	11	-65° to +165°	60 (RG-58C/U)	266.9	Threaded	500	500	Silver or Nickel	29
TNC Commercial	50	7	-55° to +85°	60 (RG-58C/U)	266.9	Threaded	500	500	Nickel	29
TNC 75 Ohm	75	2	-55° to +85°	60 (RG-59B/U)	266.9	Threaded	500	500	Nickel	29
BNC Single Crimp	50	2.5	-65° to +165°	60 (RG-58C/U)	266.9	Bayonet	500	500	Silver or Nickel	44
BNC Dual Crimp	50	4	-65° to +165°	60 (RG-58C/U)	266.9	Bayonet	500	500	Silver or Nickel	44
BNC Dual Crimp Commercial	50	4	-55° to +85°	60 (RG-58C/U)	266.9	Bayonet	500	500	Nickel	44
BNC Hex Crimp	50	4	-55° to +85°	60 (RG-58C/U)	266.9	Bayonet	500	500	Nickel	44
BNC Field Serviceable	50	4	-65° to +165°	40 (RG-142B/U)	177.9	Bayonet	500	500	Nickel	44
BNC 75 Ohm	75	2	-65° to +85°	60 (RG-59B/U)	266.9	Bayonet	500	500	Nickel	44
Twin BNC	Non-constant	—	-55° to +85°	25 (RG-108/U)	111.2	Bayonet	500	200	Silver or Nickel	89
F Series	75	—	-55° to +85°	40 (Series 59, 6, 7 Single Braid)	—	Threaded (F)	500	200	Nickel	93
G Series	75	—	-55° to +85°	40 (Series 59, 6, 7 Single Braid)	—	Push-On (G)	500	200	Nickel	93
SMA Semi-Rigid	50	26.5	-65° to +105°	60 (RG-402/U)	266.9	Threaded	500	500	Gold or Passivated Stainless Steel	100
SMA Flexible	50	12.4	-65° to +165°	40 (RG-58C/U)	177.9	Threaded	500	500	Gold or Passivated Stainless Steel	100
SMP	50	40	-65° to +165°	20 (RG-405/U)	89	Snap-On	500	100	Gold	152
OSP Semi-Rigid	50	22	-65° to +125°	60 (RG-402/U)	267.02	Push-On	500	5000	Gold or Passivated Stainless Steel	157
OSP Flexible	50	12.4	-65° to +125°	40 (RG-58/U)	178	Push-On	335	5000	Gold or Passivated Stainless Steel	157
OSSP Semi-Rigid	50	28	-65° to +125°	20 (RG-405/U)	89	Push-On	335	5000	Gold or Passivated Stainless Steel	169
OSSP Flexible	50	—	-65° to +125°	20 (RG-316/U)	89	Push-On	250	5000	Gold or Passivated Stainless Steel	169
SMB	50	4	-65° to +85°	20 (RG-316/U)	89	Snap-On	335	500	Nickel	176
SMC	50	10	-65° to +85°	20 (RG-174/U)	89	Threaded	250	500	Gold	193
MCX Connectors	50	6	-65° to +165°	20 (RG-316/U)	32	Snap-On	500	500	Nickel	196
	75	6	-65° to +165°	20 (RG-187/U)	32	Snap-On	500	500	Nickel	196
SMT Quick Grip	50	3	-40° to +125°	Omni-Flex	—	Snap-On	250	5	Gold	207
SSMT	50	6	-40° to +125°	Omni-Flex	—	Snap-On	250	100	Gold	212
MMCX	50	6	-55° to +155°	10 (RG-178/U)	44.5	Snap-On	500	500	Gold	218
Mini BNC	75	2	-40° to +85°	20 (735A)	—	Bayonet	300	500	Nickel	78
QMA	50	6	-40° to +125°	20 (RG-316/U)	—	Quick Lock	335	100	Nickel	124
Comp. Coax	50	4	-40° to +125°	N/A	—	N/A	125	25	Gold	204
DIN 1.0/2.3	50	10	-40° to +85°	—	—	Thread/ Snap/Slide	500	500	—	129
	75	2	-40° to +85°	—	—	Thread/ Snap/Slide	500	500	—	129
Switching Coax	50	2.4	—	N/A	—	N/A	—	30,000	—	229

Catalog 1307191
Revised 3-07

www.tycoelectronics.com

Dimensions are in millimeters and inches unless otherwise specified. Values in brackets are standard equivalents.

Dimensions are shown for reference purposes only. Specifications subject to change.

USA: 1-800-522-6752
Canada: 1-905-470-4425
Mexico: 01-800-733-8926
C. America: 52-55-1106-0803

South America: 55-11-2103-6000
Hong Kong: 852-2735-1628
Japan: 81-44-844-8013
UK: 44-8706-080-208

Connector Selection (Continued)

Method of Termination

Tyco Electronics provides connectors that can be terminated to coaxial cable, printed circuit boards or other connector interfaces.

Selection of the proper connector to terminate to an RG cable is simplified by using the format of this catalog. Experience has proven that certain connector types lend themselves to termination of particular coax cable sizes. For example, miniature cables such as RG 188 are most practically terminated to subminiature connectors such as SMB and SMC styles. Figure 3 illustrates the interface diameters of each connector type and the dielectric outside diameter (DOD) of popular RG cables. It is most economical to select a connector that terminates to a cable with a dielectric diameter close in size to the connector's interface diameter. The product information sections of this catalog have been organized so that all connector construction types are grouped together by cable size. This allows easy selection of the connector construction best suited for the application.

Tyco Electronics continually looks at new cable types and will release new part numbers based upon general market or specific customer needs. If you cannot find a Tyco Electronics part number for a specific cable type, please contact one of our sales locations or your local distributor to make an inquiry.

Tyco Electronics offers a wide range of connector configurations for terminating to printed circuit boards. Also available are connectors which allow the interconnection of one interface type to another.

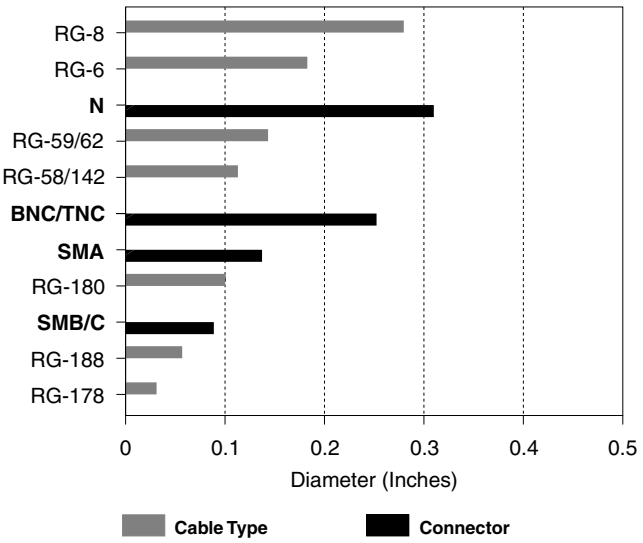

Figure 3

By reviewing this catalog, a connector can be found to match most any application. Since the RF connector is a part of a transmission line system, make sure when selecting a new connector design, that it is compatible with the overall system's performance.

Construction

The construction of a connector will greatly affect the purchase price. The connector tables in this catalog include construction details that allow you to select connectors that meet your requirements at the lowest price. Commercial designs use lower cost materials, such as zinc diecast bodies, polypropylene insulators and silver-plated contacts. Specific details of connector construction are listed in each product section of this catalog.

The materials used affect both performance and cost. Common base metals include brass, beryllium copper and stainless steel. The most common plating used for the center contact is gold because of its low contact resistance, superior mating properties and corrosion resistance.

PTFE, polypropylene and polymethylpentene (TPX) are the most common connector dielectrics. PTFE offers the lowest loss, the most stable electrical properties and high-est operating temperature. But since it cannot be injection molded, manufacturing is more costly than other materials. Be certain, when specifying connectors, that the temperature and voltage limitations are taken into consideration.

Assembly

There are several methods of assembly or termination, but they can be categorized into two major areas: (1) Solder center conductor and clamp braid (Category A) and (2) Crimp center conductor and crimp braid. Other methods are derived from combinations of the above, (e.g., solder center conductor and crimp braid. Method (1) (Category A) is generally used where no specialized tools are available, such as with field installations. With the development of low cost assembly tools, method (2) is becoming more popular for field installation.

Crimping is preferred in most manufacturing environments where assembly tooling is available because terminations can be made in the least amount of time and with the greatest reliability. The design of crimp tools assures that every termination is made the same; this cannot be done with a clamp design without further testing or inspection. Figure 4 illustrates the difference between braid crimping using AMP "O" crimp and the industry-standard hex crimp. The AMP "O" crimp gives a more consistent pressure on the outer collar. In addition, the crimp of the center conductor provides superior VSWR as shown in Figure 5.

Benefits derived by using AMP "O" crimp:

- No soldering of center contact is required. This alleviates all prospective problems associated with the soldering process such as excess solder, cold solder joints and overheating the dielectric.
- Fewer parts resulting in less assembly errors
- Braid crimping which eliminates the need for the combing, screwing and torquing associated with the braid clamp.

TPX is a trademark of Mitsui Chemicals America, Inc.

Catalog 1307191
Revised 3-07

www.tycoelectronics.com

Dimensions are in millimeters and inches unless otherwise specified. Values in brackets are standard equivalents.

Dimensions are shown for reference purposes only. Specifications subject to change.

USA: 1-800-522-6752
Canada: 1-905-470-4425
Mexico: 01-800-733-8926
C. America: 52-55-1106-0803

South America: 55-11-2103-6000
Hong Kong: 852-2735-1628
Japan: 81-44-844-8013
UK: 44-8706-080-208

7-16 Series Connectors

Product Facts

- **Designed for cellular base-stations, control component, antenna and broadcast applications**
- **Available in White Bronze plating**
- **Minimizes Intermodulation Distortion by the use of non-ferrous materials**
- **Hex knurl for wrench tightening**
- **Available for several popular RG cable sizes in solder-clamp and crimp-crimp attachment styles**



Tyco Electronics offers a comprehensive range of 7-16 Connectors to suit today's challenging Wireless Infrastructure Market. This market demands reliable, intermodulation sensitive connectors that accommodate higher power.

Tyco Electronics 7-16 Coaxial Connector Series provides reliable, intermodulation- minimizing solutions that also provide a logical alternative to N Series connectors in high power applications where a more rugged interface design is required. Typical examples of this include transmitter to antenna links and channel switching networks.

The 7-16 Series conforms to CECC 22190 and IEC 169-4 specification standards and has a 2.7kV working voltage at the connector interface and maximum power handling capability of 4kW.

The series has been designed for these demanding environments and can withstand a minimum of 500 mating cycles. Popular RG cable sizes are covered in both solder/clamp and crimp attachment styles. Two piece combination connectors adapt to straight or right-angle configurations, minimizing the number of different part codes needed by the customer. Series N to 7-16 between series adapters facilitate the transition between system interfaces as well as providing a test interface.

The increased customer demand for greater channel capacity combined with increased sensitivity of receivers has exposed the IMD (Intermodulation Distortion) phenomenon. To address this problem 7-16 Connectors have been designed to reduce IMD through the use of non-ferrous base materials and by silver plating of the electrical path. The proprietary White Bronze plating technique is standard, providing high corrosion resistance, low porosity, scratch resistance, low RF loss and a non-magnetic finish. Incorporation of hex-knurl coupling nuts allow for hand or wrench tightening of connectors, depending upon the application.

Tyco Electronics is a global ISO 9001 certified manufacturer and maintains a complete in-house Intermodulation Testing facility. Connector part numbers shown form just a small part of the extensive interconnect package that Tyco Electronics offers for the professional wireless and telecom markets.

Related Product Data

N Connectors — Pages 20-25

Application Notes —
White Bronze — Appendix B
Intermodulation — Appendix C

Between Series Adapters

For 7-16 Series Between Series Adapters, see pages 251-260.

Catalog 1307191
Revised 3-07

www.tycoelectronics.com

Dimensions are in millimeters and inches unless otherwise specified. Values in brackets are standard equivalents.

Dimensions are shown for reference purposes only. Specifications subject to change.

USA: 1-800-522-6752
Canada: 1-905-470-4425
Mexico: 01-800-733-8926
C. America: 52-55-1106-0803

South America: 55-11-2103-6000
Hong Kong: 852-2735-1628
Japan: 81-44-844-8013
UK: 44-8706-080-208

7-16 Series Connectors (Continued)

General Specifications

Materials	
Female Contacts (inner and outer)	Beryllium Copper
Other Metal Parts	Brass
Insulators	Fluorocarbon Polymer
Gaskets	Silicone Rubber
Finishes Parts in the electrical path Other Metal Parts	 Silver over copper White Bronze
Electrical	
Frequency Range	DC-7GHz
Impedance	50 Ohms
Insulation Resistance	10,000 Megohms Minimum 2.7kV (connector)
Maximum Working Voltage rms (sea level)	1.4kV (versions for RG 213, 214 and 393)
Maximum Proof Voltage rms (sea level)	2.7kV (connector) 1.4kV (versions for RG 213, 214 and 393)
Center Contact Resistance	0.8 milliohm (max.) after conditioning
Insertion Loss	<1.5dB to 5 GHz
VSWR	1.02 + 0.03f up to 7 GHz where f is measured in GHz
Intermodulation	Better than –150dBc
Mechanical	
Coupling Torque	18.5 – 22 ft.-lbs.
Proof Torque	25 ft.-lbs.
Mechanical Endurance	500 mating cycles
Environmental	
Temperature Rating	–55°C to +155°C

Catalog 1307191
Revised 3-07

www.tycoelectronics.com

Dimensions are in millimeters and inches unless otherwise specified. Values in brackets are standard equivalents.

Dimensions are shown for reference purposes only. Specifications subject to change.

USA: 1-800-522-6752
Canada: 1-905-470-4425
Mexico: 01-800-733-8926
C. America: 52-55-1106-0803

South America: 55-11-2103-6000
Hong Kong: 852-2735-1628
Japan: 81-44-844-8013
UK: 44-8706-080-208

7-16 Series Connectors (Continued)

Straight Cable Plug Solder/Solder

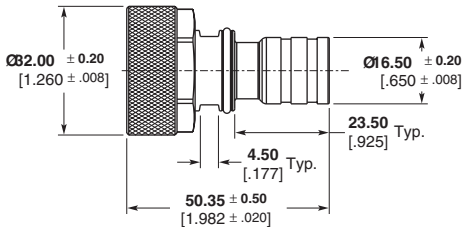

Cable Type	Body Plating	Part No.
1/2" Corrugated	White Bronze/ Gold	**1460159-1**

Straight Cable Plug Crimp/Crimp

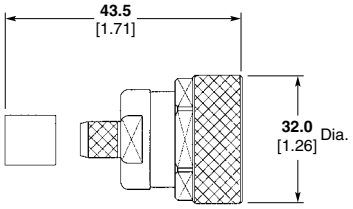

Cable Type	Body Plating	Part No.
RG 8A/U, RG 213/U	White Bronze	**6331959-1**
RG 9B/U, RG 214/U	White Bronze	**6362765-1**

Right-Angle Cable Plug Solder/Crimp

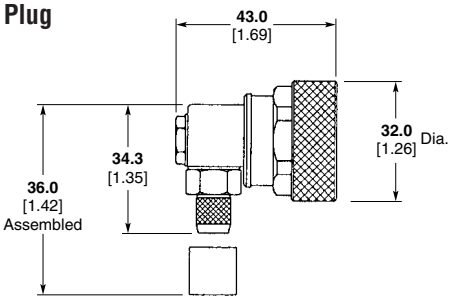

Cable Type	Body Plating	Part No.
RG 58C/U, RG 141A/U	White Bronze	**6408028-1**
RG 213/U	White Bronze	**6408030-1**
RG 214/U	White Bronze	**6312113-1**

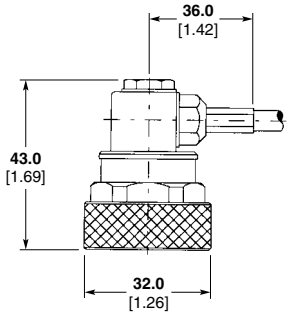

Note: Part Numbers are RoHS compliant except: ♦ Indicates non-RoHS compliant.

Catalog 1307191
Revised 3-07

www.tycoelectronics.com

Dimensions are in millimeters and inches unless otherwise specified. Values in brackets are standard equivalents.

Dimensions are shown for reference purposes only. Specifications subject to change.

USA: 1-800-522-6752
Canada: 1-905-470-4425
Mexico: 01-800-733-8926
C. America: 52-55-1106-0803

South America: 55-11-2103-6000
Hong Kong: 852-2735-1628
Japan: 81-44-844-8013
UK: 44-8706-080-208

7-16 Series Connectors (Continued)

Right-Angle Cable Plug Solder/Clamp

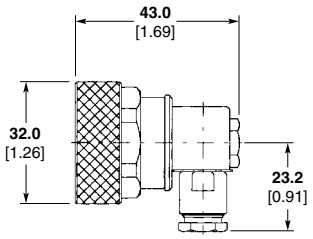

Cable Type	Body Plating	Part No.
RG 55B/U, RG 58C/U, RG 141A/U, RG 142B/U, RG 223/U, RG 400/U	White Bronze	**6408026-1**
T-Flex 402	Silver	**6328873-1**

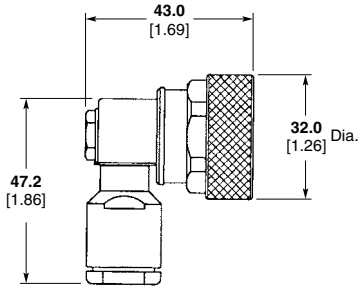

Cable Type	Body Plating	Part No.
RG 213/U, RG 214/U, RG 393/U	White Bronze	**6408027-1**
RG 8A/U, RG 9B/U, RG 213/U, RG 214/U	White Bronze	**6408038-1**

Straight Panel Mount Cable Jacks Crimp/Crimp

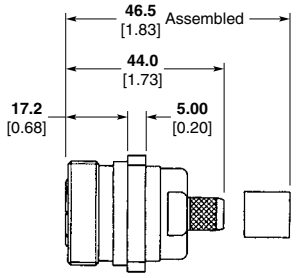

Mounting Detail

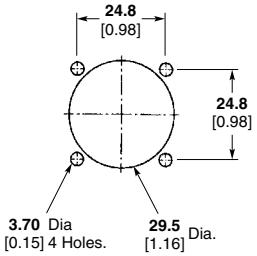

Cable Type	Body Plating	Part No.
RG 8A/U, RG 213/U	White Bronze	**6408032-1**
RG 9B/U, RG 214/U	White Bronze	**6408033-1**

Panel Socket Launcher

Mounting Detail

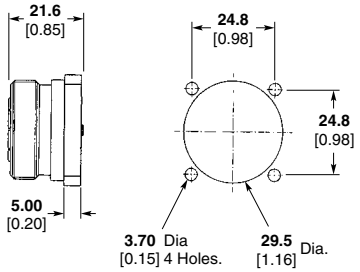

Body Plating	Part No.
White Bronze	**6311225-1**
White Bronze	**1460052-2**

Note: Part Numbers are RoHS compliant except: ♦ Indicates non-RoHS compliant.

Catalog 1307191
Revised 3-07

www.tycoelectronics.com

Dimensions are in millimeters and inches unless otherwise specified. Values in brackets are standard equivalents.

Dimensions are shown for reference purposes only. Specifications subject to change.

USA: 1-800-522-6752
Canada: 1-905-470-4425
Mexico: 01-800-733-8926
C. America: 52-55-1106-0803

South America: 55-11-2103-6000
Hong Kong: 852-2735-1628
Japan: 81-44-844-8013
UK: 44-8706-080-208

7-16 Series Connectors (Continued)

Right-Angle Panel Jack Solder/Clamp

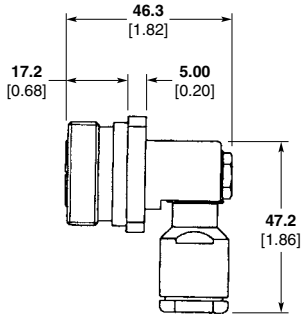

Mounting Detail

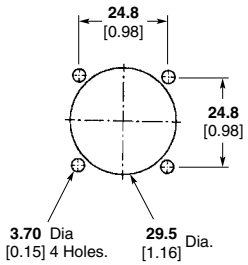

Cable Type	Body Plating	Part No.
RG 213/U, RG 214/U, RG 393	White Bronze	**6408036-1**
RG 58C/U, RG 142B/U, RG 223/U, RG 400/U	White Bronze	**6363527-1**

Combination Panel Jack Solder/Crimp

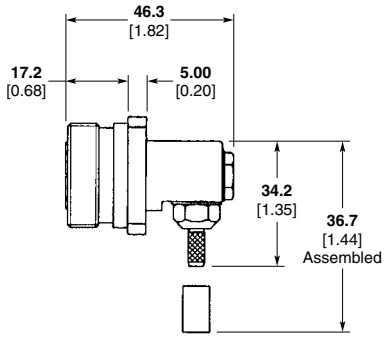

Mounting Detail

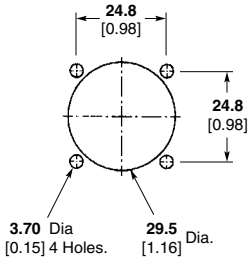

Cable Type	Body Plating	Part No.
RG 55B/U, RG 142B/U, RG 233/U, RG 400/U	White Bronze	**6363524-1**
RG 8A/U, RG 213/U	White Bronze	**6363525-1**
RG 9B/U, RG 214/U	White Bronze	**6363526-1**

Bulkhead Adapter Jack/Jack

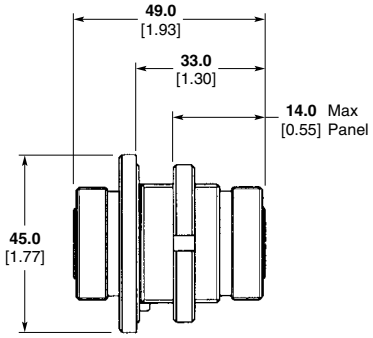

Body Plating	Part No.
White Bronze	**6408037-1**

Note: Part Numbers are RoHS compliant except: ♦ Indicates non-RoHS compliant.

Catalog 1307191
Revised 3-07

www.tycoelectronics.com

Dimensions are in millimeters and inches unless otherwise specified. Values in brackets are standard equivalents.

Dimensions are shown for reference purposes only. Specifications subject to change.

USA: 1-800-522-6752
Canada: 1-905-470-4425
Mexico: 01-800-733-8926
C. America: 52-55-1106-0803

South America: 55-11-2103-6000
Hong Kong: 852-2735-1628
Japan: 81-44-844-8013
UK: 44-8706-080-208

Lightning and EMP Protection Devices

Product Facts

- **Cellular operator protection against EMP (electro-magnetic pulses) caused by lightning strikes**
- **Two different categories: Surge protectors and Quarter wave stub tuners**
- **For use in cellular infra-structure including GSM, DCS 1800, and PCS 1900 systems**
- **Incorporates Gas Discharge Tube (GDT) technology**



Tyco Electronics has developed a unique series of Lightning and EMP protection devices for use in cellular infrastructure including GSM, DCS 1800, and PCS 1900 systems. These devices are designed to offer the cellular operator protection against EMP (electro-magnetic pulses) caused by lightning strikes. Direct or even near strikes produce fast rising electric fields within micro-seconds. These fields generate high voltage pulses through unprotected antennas and transmission lines which lead to the primary communication equipment. High voltage pulses can cause extensive damage leading to costly repairs as well as significant loss of service to subscribers. These protective devices come in two different categories: surge protectors and quarter wave stub tuners.

To ensure that proper, low level contact resistance is established between the LP device and mounting wall, it is recommended that a minimum torque of 50 in/lbs / 5.65 n/m be applied to tighten the connector mounting nut. A recommended minimum torque of 35 in/lbs / 3.95 n/m should also be applied for installation of replacement surge protector capsules to ensure proper protection performance.

In order to ensure that resultant currents from lightning or EMP strikes do not interfere with parallel transmission lines within protected electronic equipment, surge protector devices must be installed with proper orientation. The surge protector side of the device should be mounted in the unprotected side of the equipment while the mounting nut is positioned internally in the protected area.

It is important when planning lightning protection, that the user can estimate the potential number of direct strikes. This information may influence the type of device selected or the requirement for routine maintenance checks. Significant attention must be paid to the height of supporting structure as this, when related to the typical number of thunderstorms in a particular region, allows us to estimate the probability of a direct strike taking place. To assist our customers in this, the following table and chart has been included in this note. This should enable lightning protection planners to establish the likelihood of direct strikes across a network anywhere in the world.

Detailed application notes are available for proper selection of lightning protection devices (surge protectors & stub tuners) as well as intermodulation and White Bronze plating.

Selecting your RF Coaxial Lightning Protection Device

Between Series Adapters

For 7-16 Series and N Series Between Series Adapters, please see pages 251-260.

Number of Thunderstorm Days per year	hmax/m 10%	hmax/m 20%	hmax/m 50%
05	28	39	61
10	18	26	40
15	14	20	31
20	12	17	26
30	9.4	13	20
40	7.9	11	17
50	6.9	9.5	15
70	5.6	8.0	12
90	4.8	7.0	10.6
130	3.9	5.5	8.5
150	3.5	5.0	7.7
180	3.1	4.4	6.9

Table 1: Maximum height of supporting building for a given number of thunderstorm days (when hmax is exceeded, probability of direct strike to supporting building within 15 years is greater than 10% for hmax values given in second column, 20% for hmax values given in third column and 50% for hmax values given in the fourth column).

Catalog 1307191
Revised 3-07

www.tycoelectronics.com

Dimensions are in millimeters and inches unless otherwise specified. Values in brackets are standard equivalents.

Dimensions are shown for reference purposes only. Specifications subject to change.

USA: 1-800-522-6752
Canada: 1-905-470-4425
Mexico: 01-800-733-8926
C. America: 52-55-1106-0803

South America: 55-11-2103-6000
Hong Kong: 852-2735-1628
Japan: 81-44-844-8013
UK: 44-8706-080-208

Surge Protectors

Product Facts

- **Excellent for Broadband Frequency Applications**
- **Field Replaceable Gas Discharge Tube**
- **Available Interfaces Facilitate Retrofit Capabilities**
- **Low VSWR up to 2.5GHz**
- **Specialized White Bronze Finish**



Selection of a Lightning Protection Device

At right are the basic advantages and limitations for both types of protection to use in the proper selection for your application.

Advantages

- Broadband
- Allows DC bias on the transmission line. (critical for applications using mast top electronics.)
- No harmonic passband
- Ease of retrofitting antenna sights
- GDT easily accessible for replacement

Limitations

- Routine maintenance recommended
- 3 GHZ maximum frequency
- Initial pass-through voltage

These devices incorporate Gas Discharge Tube (GDT) technology. A GDT is a hermetically sealed tube containing an inert gas. The tube is inserted in the side of the device through an easily accessible weather sealed port. During normal operation the tube is inactive. When an installation is struck by lightning, a high voltage impulse will appear on the coaxial line. As the impulse amplitude rises, a level is reached where the impulse surpasses the dynamic voltage threshold of the tube and the electrodes arc over to discharge the energy to ground. Prior to activation of the tube, there will be a short period of time where energy will be present on the line. This *residual pulse* is equal to the dynamic voltage threshold of the tube. The maximum impulse voltage a tube can handle without discharging is referred to as the *impulse sparkover voltage*. This capacity of the GDT is quoted as follows:

Characteristic	Symbol	Definition	Impulse	Typical Value
Impulse sparkover voltage	U_{zdyn}	Dynamic voltage threshold	1kV/µS	650V

In the case of the referenced chart, the voltage will rise at one kilovolt per microsecond and the tube will fire after 650 nanoseconds. During activation a small percentage of voltage (called arc voltage) will still pass through. This will be approximately 30 volts. When the pulse subsides, the tube again becomes inactive leaving a small *residual voltage* on the line. A direct lightning strike results in an impulse current of high amplitude. The capability of a device to protect a system is defined as the *impulse discharge current* rating. This is defined as the peak current of an impulse which the device can withstand ten times (5 at each polarity at fixed intervals) without affecting the device. *maximum impulse discharge current* is the peak current of an impulse the device can withstand once.

Surge protectors are often used in applications requiring a standing DC line voltage. This is typical in applications with mast top electronics. The maximum voltage capacity of a surge protector prior to it surpassing the static voltage threshold and discharging it to ground is defined as its D.C.

Catalog 1307191
Revised 3-07

www.tycoelectronics.com

Dimensions are in millimeters and inches unless otherwise specified. Values in brackets are standard equivalents.

Dimensions are shown for reference purposes only. Specifications subject to change.

USA: 1-800-522-6752
Canada: 1-905-470-4425
Mexico: 01-800-733-8926
C. America: 52-55-1106-0803

South America: 55-11-2103-6000
Hong Kong: 852-2735-1628
Japan: 81-44-844-8013
UK: 44-8706-080-208

Surge Protectors (Continued)

sparkover voltage. This capacity is quoted as follows:

Characteristic	Symbol	Definition	Impulse	Typical Value
d.c. sparkover voltage	U_{zstat}	Static voltage threshold	n/a	230V

In these applications it is important to select a device that will assure the tube can return to its inactive state after the passage of a surge. This feature of the Surge protector is known as the *holdover voltage*. If the device continues to conduct, the protected line will be short circuited and the tube will heat up (glow mode). If left in this state, the tube can overheat and destruct. GDT's have a finite life span which is inversely proportional to the energy dissipated. At extremes it is possible to reach a level where the tube is unable to discharge all the energy and is destroyed. It is therefore necessary to schedule routine maintenance checks and periodically replace the tube within the surge protector.

Surge protectors offer excellent lightning protection for broadband systems and are usable up to 3 GHz. Standard interfaces include 7-16, N, and SMA. Configurations include straight and bulkhead mounted adapters which allows for ease of assimilation into existing systems.

Specifications

Requirement	Detail
Electrical	
Frequency Range	DC to 3GHz
Impedance	50Ω
VSWR Performance	≤ 1.33:1
Insertion Loss (Typical)	0.45dB
Impulse Discharge Current (8/20µs, multiple strike)	20kA
Maximum Impulse Discharge Current (8/20µs, single strike)	50kA
Dynamic Sparkover Voltage, NEMP (1kV/µs)	2,000V
Dynamic Sparkover Voltage, LEMP (1kV/µs)	800V
Dynamic Sparkover Voltage, Static (<100V/µs)	90V*
Materials	
Body Parts	Brass
Gaskets	Silicone Rubber
Female Contacts	Beryllium Copper
Male Contacts	Brass
Insulators	P.T.F.E.
Environmental	
Operating Temperature Range	-45° C to +85° C
Relative Humidity	up to 100%

* Determined by gas tube used, can be higher than value shown.

N Series Jack to SMA Bulkhead Jack Adapter



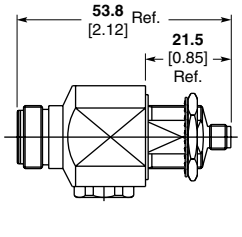

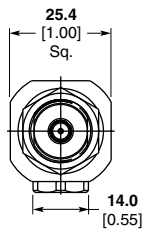

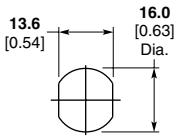

Recommended Mounting Hole

Part Number
6312079-1

Frequency Range	DC to 3GHz
Contact Plating	Gold
Body Plating	White Bronze
Max Panel	10.00mm
Compliant With	CECC22210/ CEC22110
Coupling Torque	0.7-1.1Nm
Proof Torque	1.7Nm both ends
Endurance	500 Matings

Note: Part Numbers are RoHS compliant except: ♦ Indicates non-RoHS compliant.

Catalog 1307191
Revised 3-07

www.tycoelectronics.com

Dimensions are in millimeters and inches unless otherwise specified. Values in brackets are standard equivalents.

Dimensions are shown for reference purposes only. Specifications subject to change.

USA: 1-800-522-6752
Canada: 1-905-470-4425
Mexico: 01-800-733-8926
C. America: 52-55-1106-0803

South America: 55-11-2103-6000
Hong Kong: 852-2735-1628
Japan: 81-44-844-8013
UK: 44-8706-080-208

Surge Protectors (Continued)

N Series Jack to N Series Bulkhead Jack Adapter



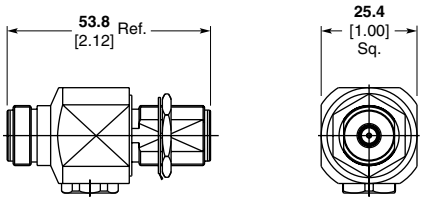

Part Number
6312138-1

Frequency Range	DC to 3.0 GHz
Contact Plating	Gold
Body Plating	White Bronze
Max Panel	10.00mm
Compliant With	CECC22210
Coupling Torque	0.7-1.1 Nm
Proof Torque	1.7 Nm
Endurance	500 Matings

7-16 Plug to 7-16 Jack Adapter



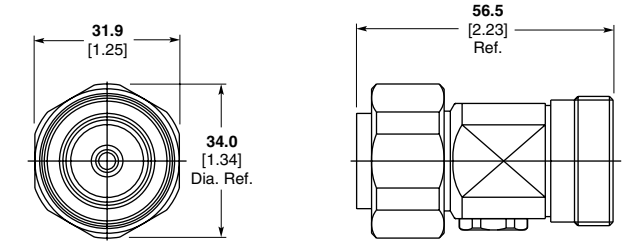

Part Number
6312121-1

Frequency Range	DC to 3.0 GHz
Contact Plating	Silver
Body Plating	White Bronze
Compliant With	CECC22190
Coupling Torque	25 - 30 Nm
Proof Torque	35Nm
Endurance	500 Matings

Gas Discharge Tube Replacement



Part Number
1402314-1

d.c. Sparkover Voltage:	230V ± 46V
Impulse Sparkover Voltage: (1kV/mS)	700V typ. (900V max)
Glow Discharge Voltage:	72V
Arc Discharge Voltage:	10V
a.c. Discharge Current: (1 sec, 50Hz)	20A
Impulse Discharge Current: (8/20mS waveform)	20kA (50kA for one strike)
Insulation Resistance (@100V):	10GW
Capacitance:	2pF

Note: Part Numbers are RoHS compliant except: ♦ Indicates non-RoHS compliant.

Catalog 1307191
Revised 3-07

www.tycoelectronics.com

Dimensions are in millimeters and inches unless otherwise specified. Values in brackets are standard equivalents.

Dimensions are shown for reference purposes only. Specifications subject to change.

USA: 1-800-522-6752
Canada: 1-905-470-4425
Mexico: 01-800-733-8926
C. America: 52-55-1106-0803

South America: 55-11-2103-6000
Hong Kong: 852-2735-1628
Japan: 81-44-844-8013
UK: 44-8706-080-208

λ/4 Stub Tuners

Product Facts

- **Ideal for use with GSM, PCS and DCS**
- **Maintenance Free Operation**
- **Low VSWR Within Specified Bandwidth**
- **Configurations include direct attachments to Cable variants**
- **Optional White Bronze Finish**



Advantages

- Low VSWR in pass-band
- Minimal maintenance
- Pass-through voltage eliminated
- No sparkover or residual voltage concerns
- Ease of retro-fitting antenna sights

Limitations

- Frequency specific
- Harmonic passband
- Does not allow DC bias on transmission line

These devices are three port coaxial connectors. The third port extending from the main through path is terminated in a short circuit at a pre-determined distance calculated to be exactly one quarter wavelength at the desired center frequency (see graph).

Unlike surge protectors, this design eliminates concerns about residual pulse, sparkover voltage and residual voltage ensuring greater protection for sensitive electronic equipment. As opposed to surge protectors, stub tuners will absorb lightning strikes without need for replacing components. These devices yield very low VSWR and feature high attenuation within a relatively narrow pass-band (+/- 70 MHz) but are application specific. Stub tuners also pass energy in bands that are harmonically related to the fundamental center frequency. The graphs below show a typical test impulse and the response of a stub tuner.

λ/4 Shorting Stub Basics

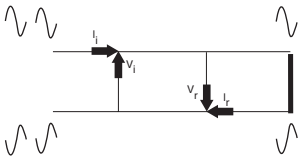

Stub tuners are classified into two broad categories—simple and broadband. The simple stub tuner exhibits a V-shaped response on the VSWR vs. frequency plot. The trough of the V is designed to occur at the required Fo and the bandwidth is restricted to approximately 8%. The broadband tuner employs extra RF techniques, similar to multiple cavity filtering, which increase the effective bandwidth by approximately 20%.

Tyco Electronics offers a wide variety of stub tuners for the most popular frequency bands to facilitate purchase without need for custom design and manufacturing. Designs exist for GSM, PCS 1900, DCS 1800 frequencies with standard industry interfaces including SMA, 7-16, and Type N. Configurations include cable assemblies, cabled connectors, and adapters for ease of assimilation into existing systems. Stub tuners are maintenance free since they incorporate no active components though it is recommended that a check of the stub tuner affixment be made following heavy discharges at an installation.

Typical Test Impulse

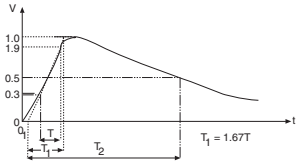

Typical λ/4 Test Response

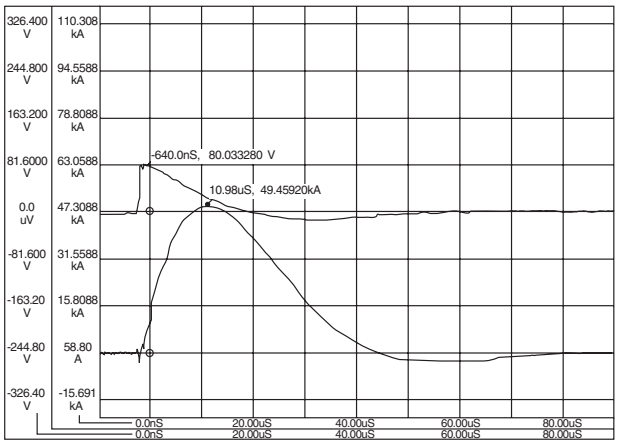

Catalog 1307191
Revised 3-07

www.tycoelectronics.com

Dimensions are in millimeters and inches unless otherwise specified. Values in brackets are standard equivalents.

Dimensions are shown for reference purposes only. Specifications subject to change.

USA: 1-800-522-6752
Canada: 1-905-470-4425
Mexico: 01-800-733-8926
C. America: 52-55-1106-0803

South America: 55-11-2103-6000
Hong Kong: 852-2735-1628
Japan: 81-44-844-8013
UK: 44-8706-080-208

λ/4 Stub Tuners (Continued)

Requirement	Detail (Type-N, 7-16)
Electrical	
Impedance	50Ω
VSWR Performance in Band	≤1.2:1
Insertion Loss (Typical)	0.2dB
DC Resistance (stub outer to inner)	1mΩ
Dynamic Voltage @ 250A/ms	≤15V
Residual Voltage @ 2500A, 8/20μs	≤15V
Outer Conductor Contact Resistance	10mΩ
DC Resistance (through-path center contact)	100mΩ
Materials	
Body parts	Brass
Gasket	Silicone Rubber
Female contacts	Beryllium Copper
Male Contacts	Brass
Insulators	P.T.F.E.
Environmental	
Operating temperature range	-45°C to +85°C
Relative humidity (non-condensing)	up to 100%

DCS 1800
Type N Clamp Bulkhead Jack



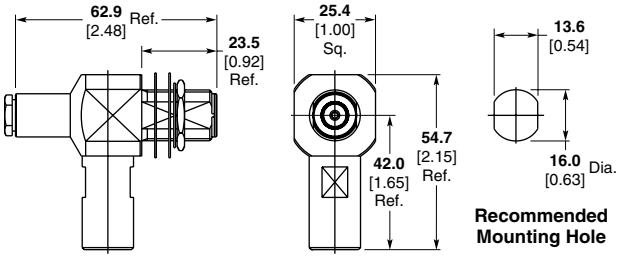

Cable	Part No.
T-Flex402	**6329818-1**

Bandwidth	± 70 MHz
Center Frequency	1795 MHz
Contact Plating	Silver
Body Plating	Silver
Max Panel	10.00mm
Compliant With	CECC22210
Coupling Torque	0.7-1.1Nm
Proof Torque	1.7Nm
Endurance	500 Matings

7-16 Jack to 7-16 Bulkhead Jack Adapter



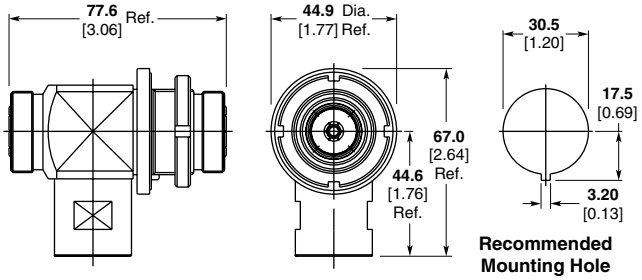

Part Number
6361137-1

Bandwidth	± 70 MHz
Center Frequency	1795 MHz
Contact Plating	Silver
Body Plating	White Bronze
Max Panel	8.00mm
Compliant With	CECC22190
Coupling Torque	25 - 30Nm
Proof Torque	35Nm
Endurance	500 Matings

Note: Part Numbers are RoHS compliant except: ♦ Indicates non-RoHS compliant.

Catalog 1307191
Revised 3-07

www.tycoelectronics.com

Dimensions are in millimeters and inches unless otherwise specified. Values in brackets are standard equivalents.

Dimensions are shown for reference purposes only. Specifications subject to change.

USA: 1-800-522-6752
Canada: 1-905-470-4425
Mexico: 01-800-733-8926
C. America: 52-55-1106-0803

South America: 55-11-2103-6000
Hong Kong: 852-2735-1628
Japan: 81-44-844-8013
UK: 44-8706-080-208

λ/4 Stub Tuners (Continued)

DCS 1800 (Continued)

Type N Crimp Bulkhead Jack



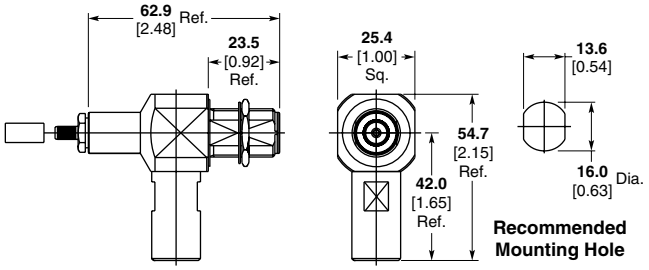

Cable	Part No.
RG58C/U	**1329819-1**

Bandwidth	± 70 MHz
Center Frequency	1795 MHz
Contact Plating	Silver
Body Plating	Silver
Max Panel	10.00mm
Compliant With	CECC22210
Coupling Torque	0.7-1.1Nm
Proof Torque	1.7Nm
Endurance	500 Matings

Type N Jack to Type N Bulkhead Jack Adapter



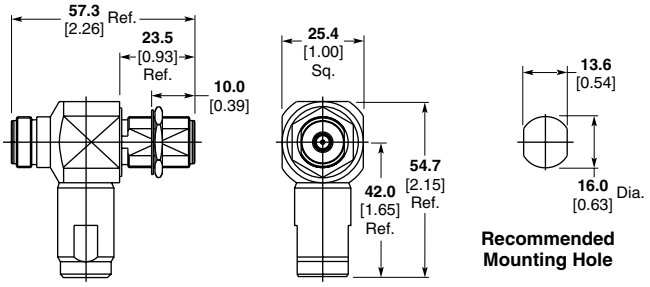

Part Number
1361138-1

Bandwidth	± 70 MHz
Center Frequency	1795 MHz
Contact Plating	Silver
Body Plating	Silver
Max Panel	10.00mm
Compliant With	CECC22210
Coupling Torque	0.7-1.1Nm
Proof Torque	1.7Nm
Endurance	500 Matings

GSM

7-16 Bulkhead Jack to 7-16 Bulkhead Jack



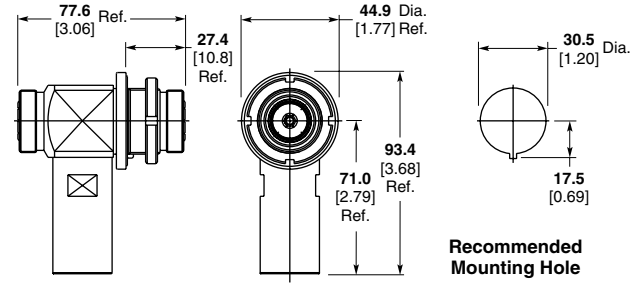

Cable	Part No.
T-Flex 402 Cable	**6408399-1**

Bandwidth	± 70 MHz
Center Frequency	925 MHz
Contact Plating	Silver
Body Plating	White Bronze
Max Panel	8.00mm
Compliant With	CECC22190
Coupling Torque	25 - 30Nm
Proof Torque	35Nm
Endurance	500 Matings

PCS 1900

Type N Clamp Bulkhead Jack



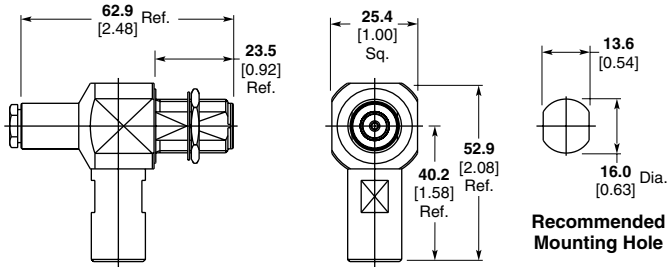

Cable	Part No.
T-Flex 402	**1312137-1**

Bandwidth	± 70 MHz
Center Frequency	1920 MHz
Contact Plating	Silver
Body Plating	Silver
Max Panel	10.00mm
Compliant With	CECC22210
Coupling Torque	0.7-1.1Nm
Proof Torque	1.7Nm
Endurance	500 Matings

Note: Part Numbers are RoHS compliant except: ♦ Indicates non-RoHS compliant.

Catalog 1307191
Revised 3-07

www.tycoelectronics.com

Dimensions are in millimeters and inches unless otherwise specified. Values in brackets are standard equivalents.

Dimensions are shown for reference purposes only. Specifications subject to change.

USA: 1-800-522-6752
Canada: 1-905-470-4425
Mexico: 01-800-733-8926
C. America: 52-55-1106-0803

South America: 55-11-2103-6000
Hong Kong: 852-2735-1628
Japan: 81-44-844-8013
UK: 44-8706-080-208

λ/4 Stub Tuners (Continued)

PCS 1900 (Continued)

Type N Crimp Bulkhead Jack



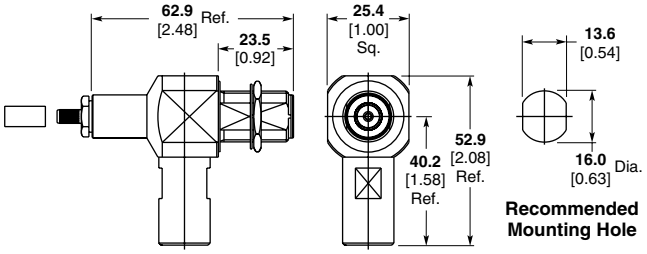

Cable	Part No.
RG58 C/U	**6312139-1**

Bandwidth	± 70 MHz
Center Frequency	1920 MHz
Contact Plating	Silver
Body Plating	Silver
Max Panel	10.00mm
Compliant With	CECC22210
Coupling Torque	0.7-1.1Nm
Proof Torque	1.7Nm
Endurance	500 Matings

7-16 Clamp Bulkhead Jack



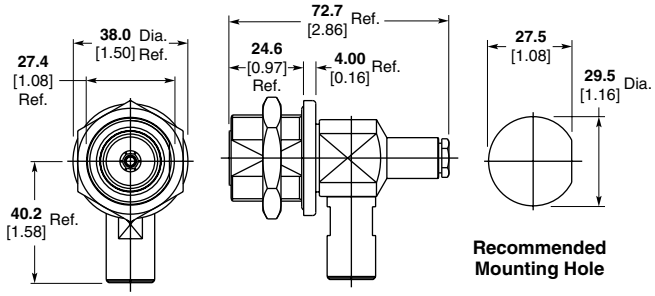

Cable	Part No.
T-Flex402	**6312123-1**

Bandwidth	1920 MHz
Center Frequency	± 70 MHz
Contact Plating	Silver
Body Plating	Silver
Max Panel	8.00mm
Compliant With	CECC 22190
Coupling Torque	25-30 Nm
Proof Torque	35 Nm
Endurance	500 Matings

7-16 Bulkhead Jack to 7-16 Bulkhead Jack Adapter



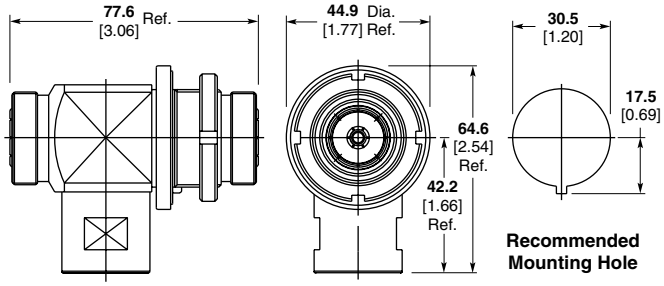

Part Number
6312124-1

Bandwidth	1920 MHz
Center Frequency	± 70 MHz
Contact Plating	Silver
Body Plating	White Bronze
Max Panel	8.00mm
Compliant With	CECC 22190
Coupling Torque	25-30 Nm
Proof Torque	35 Nm
Endurance	500 Matings

Type N Bulkhead Jack to Type N Bulkhead Jack Adapter



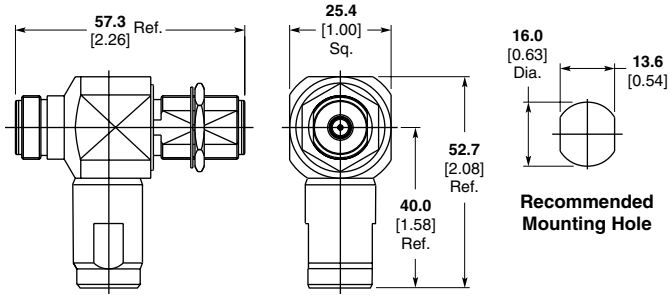

Part Number
6361139-1

Bandwidth	± 70 MHz
Center Frequency	1920 MHz
Contact Plating	Silver
Body Plating	Silver
Max Panel	10.00mm
Compliant With	CECC22210
Coupling Torque	0.7-1.1Nm
Proof Torque	1.7Nm
Endurance	500 Matings

Note: Part Numbers are RoHS compliant except: ♦ Indicates non-RoHS compliant.

Catalog 1307191
Revised 3-07

www.tycoelectronics.com

Dimensions are in millimeters and inches unless otherwise specified. Values in brackets are standard equivalents.

Dimensions are shown for reference purposes only. Specifications subject to change.

USA: 1-800-522-6752
Canada: 1-905-470-4425
Mexico: 01-800-733-8926
C. America: 52-55-1106-0803

South America: 55-11-2103-6000
Hong Kong: 852-2735-1628
Japan: 81-44-844-8013
UK: 44-8706-080-208

N Series Connectors

Product Facts

- **Designated connectors are MIL-C-39012, Class II, Category B qualified**
- **Captive center contacts**
- **Completely crimpable application – one hand tool crimps all cables with single or double braided shields of a given size**
- **Impedance matching crimps**
- **Broad band performance – low VSWR**
- **Superior cable retention**
- **PTFE dielectric**
- **Silver or nickel finish**
- **Fully intermateable with MIL-C-39012 connectors**
- **Listed under the Component Program of Underwriters Laboratories Inc., File No. E81956**
- **Recognized under the Component Program of Underwriters Laboratories Inc., File No. E81956**
- **Certified by Canadian Standards Association File No. LR 7189**

Between Series Adapters

For N Series Between Series Adapters, see pages 251-260.

The Tyco Electronics N Connector, featuring a 15.88 [5/8] - 24 threaded coupling for optimum stability, is highly suited for critical applications and environments. This medium sized connector can withstand shock and vibration to assure a low noise level and has a constant impedance of 50 ohms. It also features a captive center contact and provides excellent performance at frequencies up to 11 GHz, with voltages to 1000 volts rms.

This Tyco Electronics connector offers the added benefits of low overall applied cost with a labor-saving two-crimp assembly. The contact is simply crimped to the cable's center conductor, then both braid and cable support are simultaneously crimped to complete the termination.

N Series Connectors are available in standard plug, jack, panel jack, bulkhead jack and right-angle plug configurations. Those connectors with a military designation (M39012) are furnished in accordance with all requirements of specification MIL-C-39012, Class II, Category B.

Materials

Brass — QQ-B-626
Beryllium Copper — QQ-C-530
Dielectric — **PTFE** — MIL-P-19468
Copper, Annealed — QQ-C-576
Phosphor Bronze — QQ-B-750
Silicone Rubber — ZZ-R-765

Plating

Body —
Silver per QQ-S-365
Nickel per QQ-N-290
Center Contact —
Gold per MIL-B-45204



Electrical Characteristics

Nominal Impedance — 50 ohms
Working Voltage — 1000 volts, rms at sea level
Frequency Range — 0 to 11 GHz
Voltage Standing Wave Ratio (VSWR) —
Straight Plug or Jack — 1.3:1 max.
Right-Angle Plug —
1.35 max. at 0 to 9.0 GHz
1.50 max. at 9.0 to 11.0 GHz
Contact Resistance —
Outer Contact — 0.2 milliohms
Center Contact — 1.0 milliohms
Right-Angle — 2.5 milliohms
Insulation Resistance — 5000 megohms min.
Dielectric Withstanding Voltage — 2500 Volts, rms at sea level
RF Leakage — MIL Type, -90 dB min. at 2 to 3 GHz
RF Insertion Loss — MIL Type, 0.15 dB max. at 10 GHz
Right-Angle Plug, 0.3 dB max. at 10 GHz
Corona Level — MIL Type, 500 volts min. at 21 336 m [70,000 ft.]
Terminator —
Resistance — 50 ohms ±1%
Power Rating — 1.0 watt max.

Mechanical Characteristics

Mating/Unmating — Threaded coupling
Cable Attachment — Crimp type - center contact and braid
Coupling Nut Retention — 445 N [100 lbs.] min.
Cable Retention — 400 N [90 lbs.] min. RG 214/U Cable
Durability — 500 cycles per MIL-C-39012
Captive Contact — 27 N [6 lbs.] min. axial retention, either direction

Environmental Characteristics

Temperature Range —
MIL Type, -65°C to +165°C
Commercial, -55°C to +85°C
Vibration — MIL-STD-202, Method 204, Test Cond. B
Shock — MIL-STD-202, Method 213, Test Cond. I
Moisture Resistance — MIL-STD-202 Method 106
Salt Spray — MIL-STD-202, Method 101, Test Cond B
Temperature Cycling — MIL-STD-202, Method 107, Test Cond. B (except high temperature is +85°C)

Note: All data pertains to use with MIL-C-39012 specified cables only.

Catalog 1307191
Revised 3-07

www.tycoelectronics.com

Dimensions are in millimeters and inches unless otherwise specified. Values in brackets are standard equivalents.

Dimensions are shown for reference purposes only. Specifications subject to change.

USA: 1-800-522-6752
Canada: 1-905-470-4425
Mexico: 01-800-733-8926
C. America: 52-55-1106-0803

South America: 55-11-2103-6000
Hong Kong: 852-2735-1628
Japan: 81-44-844-8013
UK: 44-8706-080-208

N Series Connectors, 50 Ohm (Continued)

Plugs

MIL Type Dual Crimp

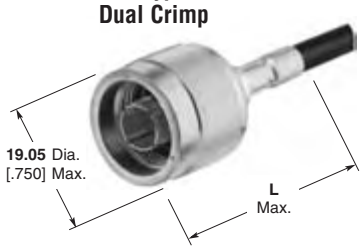

Semi-Rigid Cable



Hex Dual Crimp

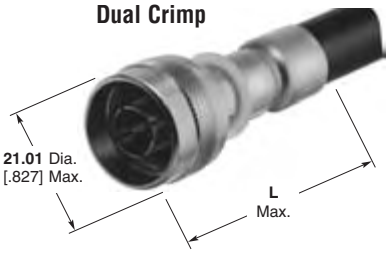

RG/U Cable	Termination Type	Body Plating	M39012/ Military No. and/ or Comments	Dim. L	Integral Die Hand Tool	Hex Across Flats		Notes	Part No.
						Center	Braid		
58, 58A, 58B, 58C	O Crimp	Nickel	Knurl Collar	**42.85** 1.687	220045-2	—	—	1	**1-5225661-2**
	O Crimp	Silver	Knurl Collar	**42.85** 1.687	220045-2	—	—	1	**5225361-1**
223, 55, 55A, 55B	O Crimp	Nickel	Knurl Collar	**42.85** 1.687	220045-2	—	—	1	**1-5225661-3**
	O Crimp	Silver	Knurl Collar	**42.85** 1.687	220045-2	—	—	1	**5225361-2**
142, 142A 142B, 400	O Crimp	Silver	Knurl Collar	**42.85** 1.687	220045-2	—	—	1, 3	**5225392-2**
			Knurl Collar	**42.85** 1.687	220045-2	—	—	1	**5225361-4**
142, 142A 142B	O Crimp	Nickel	Knurl Collar	**41.35** 1.628	220045-2	—	—	3	**5225699-1**
	Hex Crimp	Nickel	Knurl Collar	**39.40** 1.550	58436-1	**1.73** .068	**5.41** .213	2	**5415232-4**
115A, BELDEN 89880, 9880	O Crimp	Nickel	Knurl Collar	**42.85** 1.687	220015-1	—	—	3	**5225092-8**
BELDEN 9880	Hex Crimp	Nickel	Knurl Collar	**39.40** 1.550	58485-1	**2.54** .100	**10.90** .429	2	**1-415232-0**
402 Semi Rigid (.141)	Solder	Nickel	Knurl Collar	**24.6** .970	—	—	—	—	**6057088-1**
405 Semi Rigid (.085)	Solder	Nickel	Knurl Collar	**24.6** .970	—	—	—	—	**6057094-1**
8, 8A, 213	O Crimp	Nickel	Knurl Collar	**42.85** 1.687	220015-1	—	—	—	**1-5227086-0**
	O Crimp	Nickel	Knurl Collar	**42.85** 1.687	220015-1	—	—	—	**5225661-2**
	O Crimp	Silver	01B0007 Knurl Collar	**42.85** 1.687	220015-1	—	—	3	**51692-2**
	O Crimp	Nickel	Knurl Collar	**47.22** 1.859	220015-1	—	—	3	**5225662-2**
11, 11A, 216	O Crimp	Silver	01B0013 Knurl Collar	**42.85** 1.687	220015-1	—	—	3	**51692-4**
BELDEN 9292	O Crimp	Nickel	—	**47.22** 1.859	220015-1	—	—	3	**1-5225662-8**
393	Hex Crimp	Nickel	Hex Collar	**39.40** 1.550	58485-2	**3.25** .128	**10.90** .429	2	**5414160-5**
BELDEN 8214	O Crimp	Nickel	Knurl Collar	**42.85** 1.687	220015-1	—	—	—	**1-5225661-6**
9, 9A, 9B, 214	O Crimp	Nickel	Knurl Collar	**42.85** 1.687	220015-1	—	—	—	**5225661-1**
	O Crimp	Silver	01B0008 Knurl Collar	**42.85** 1.687	220015-1	—	—	3	**51692-1**
9, 214	Hex Crimp	Nickel	Hex Collar	**39.40** 1.550	58485-1	**2.54** .100	**10.90** .429	2	**5415232-7**
LMR 240	Hex/Solder	Silver	Hex Collar	**29.74** 1.171	—	—	**6.81** .268	—	**6274532-1**

Notes: 1 Hand Tool 69710-1, with Die Insert 220062-1, is available to terminate these connectors. The 626 Pneumatic tool system can also be used.
2 Die Set Crimp Tool — PRO-CRIMPER II Hand Tool, P/N 354940-1 or 626 Series Pneumatic Tool with 679304-1.
3 Weatherproof.

BELDEN is a trademark of Belden Wire and Cable Company.

Note: Part Numbers are RoHS compliant except: ♦ Indicates non-RoHS compliant.

Catalog 1307191
Revised 3-07

www.tycoelectronics.com

Dimensions are in millimeters and inches unless otherwise specified. Values in brackets are standard equivalents.

Dimensions are shown for reference purposes only. Specifications subject to change.

USA: 1-800-522-6752
Canada: 1-905-470-4425
Mexico: 01-800-733-8926
C. America: 52-55-1106-0803

South America: 55-11-2103-6000
Hong Kong: 852-2735-1628
Japan: 81-44-844-8013
UK: 44-8706-080-208

N Series Connectors, 50 Ohm (Continued)

Right-Angle Plugs, Crimp

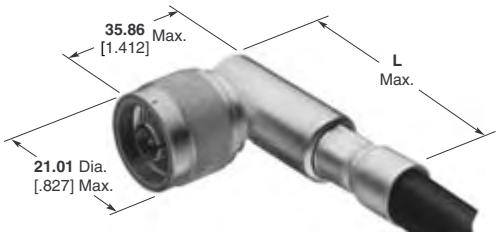

RG/U Cable	Termination Type	Body Plating	M39012/ Military No. and/ or Comments	Dim. L	Integral Die Hand Tool	Hex Across Flats		Notes	Part No.
						Center	Braid		
58A, 58C	Hex Crimp	Nickel	Hex Collar	**57.79** 2.275	58436-1	**1.73** .068	**5.41** .213	1	**5415255-1**
142, 142A, 142B	Hex Crimp	Nickel	Hex Collar	**57.79** 2.275	58436-1	**1.73** .068	**5.41** .213	1	**5415255-2**
8, 8A, 213	O Crimp	Nickel	Knurl Collar	**57.79** 2.275	220015-1	—	—	—	**5225669-2**
	O Crimp	Silver	05B0002 Knurl Collar	**57.79** 2.275	220015-1	—	—	—	**225014-2**
8, 213	Hex Crimp	Nickel	Hex Collar	**57.79** 2.275	58485-1	**2.54** .100	**10.90** .429	1	**5415255-3**
393	O Crimp	Silver	Knurl Collar	**62.31** 2.453	220015-1	—	—	1,3	**225389-6**
9, 9A, 9B 214	O Crimp	Nickel	Knurl Collar	**57.79** 2.275	220015-1	—	—	—	**5225669-1**
	O Crimp	Silver	05B0003 Knurl Collar	**57.79** 2.275	220015-1	—	—	—	**225014-3**
9, 214	Hex Crimp	Nickel	Hex Collar	**57.79** 2.275	58485-1	**2.54** .100	**10.90** .429	1	**5415255-4**

Notes: [1] Die Assembly compatible with Crimp Tool — PRO-CRIMPER III Hand Tool, P/N 354940-1, 626 Series Pneumatic Tool 1213855-1, SDE Battery Tool Kit 1725837-1, or SDE Electric Terminator 1490076-2.
[3] Weatherproof.

Jacks

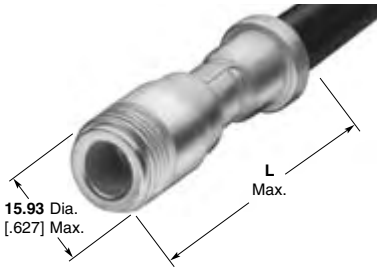

RG/U Cable	Termination Type	Body Plating	M39012/ Military No. and/ or Comments	Dim. L	Integral Die Hand Tool	Hex Across Flats		Notes	Part No.
						Center	Braid		
58A, 58C	O Crimp	Nickel	—	**44.83** 1.765	220045-2	—	—	2, 3	**1-5225664-2**
142, 142A, 142B	Hex Crimp	Nickel	—	**41.28** 1.625	58436-1	**1.73** .068	**5.41** .213	2	**5415242-2**
8, 8A, 213	O Crimp	Silver	02B0008	**49.20** 1.937	220015-1	—	—	3	**225093-2**
8, 213	O Crimp	Nickel	—	**49.20** 1.937	220015-1	—	—	2, 3	**5225664-2**
9, 9A, 9B, 214	O Crimp	Silver	02B0009	**49.20** 1.937	220015-1	—	—	—	**225093-1**
9, 214	O Crimp	Nickel	—	**49.20** 1.937	220015-1	—	—	2, 3	**5225664-1**
393	Hex Crimp	Nickel	—	**41.28** 1.625	58485-1	**2.54** .100	**10.90** .429	2	**5415242-6**
402 Semi Rigid (.141)	Solder	Nickel	—	**26.70** 1.051	—	—	—	—	**6057116-1**

Notes: [1] Hand Tool 69710-1, with Die Insert 220062-1, is available to terminate these connectors. The 626 Pneumatic tool system can also be used.
[2] Die Assembly compatible with Crimp Tool — PRO-CRIMPER III Hand Tool, P/N 354940-1, 626 Series Pneumatic Tool 1213855-1, SDE Battery Tool Kit 1725837-1, or SDE Electric Terminator 1490076-2.
[3] Weatherproof.

Note: Part Numbers are RoHS compliant except: ♦ Indicates non-RoHS compliant.

Catalog 1307191
Revised 3-07

www.tycoelectronics.com

Dimensions are in millimeters and inches unless otherwise specified. Values in brackets are standard equivalents.

Dimensions are shown for reference purposes only. Specifications subject to change.

USA: 1-800-522-6752
Canada: 1-905-470-4425
Mexico: 01-800-733-8926
C. America: 52-55-1106-0803

South America: 55-11-2103-6000
Hong Kong: 852-2735-1628
Japan: 81-44-844-8013
UK: 44-8706-080-208

N Series Connectors, 50 Ohm (Continued)

Bulkhead Jacks, Crimp



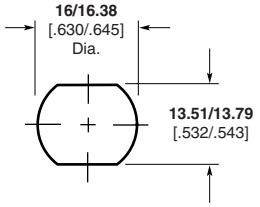

Maximum Panel Thickness **6.35** [.250]

Recommended Panel Cutout

RG/U Cable	Termination Type	Body Plating	Dim. L	Integral Die Hand Tool	Hex Across Flats		Notes	Part No.
					Center	Braid		
58, 58A, 58B, 58C, LMR195	O Crimp	Silver	**49.61** 1.953	220045-2	—	—	1	**5225363-1**
58A, 58C	Hex Crimp	Nickel	**45.72** 1.800	58436-1	**1.73** .068	**5.41** .213	2	**5415248-1**
142, 142A, 142B	Hex Crimp	Nickel	**45.72** 1.800	58436-1	**1.73** .068	**5.41** .213	2	**5415248-7**
124, 140, 210, 62, 62A, 62B, 59, 59A, 59B, BELDEN 9291, 9209, 9269, 89269	O Crimp	Nickel	**49.61** 1.953	220045-3	—	—	—	**1-5225667-6**
8, 213	O Crimp	Silver	**53.98** 2.125	220015-1	—	—	2, 3	**225094-2**
393	O Crimp	Nickel	**53.98** 2.125	220015-1	—	—	2, 3	**1-225668-1**
9, 214	O Crimp	Silver	**53.98** 2.125	220015-1	—	—	2, 3	**225094-1**

Notes: 1 Hand Tool 69710-1, with Die Insert 220062-1, is available to terminate these connectors. The 626 Pneumatic tool system can also be used.
2 Die Assembly compatible with Crimp Tool — PRO-CRIMPER III Hand Tool, P/N 354940-1, 626 Series Pneumatic Tool 1213855-1, SDE Battery Tool Kit 1725837-1, or SDE Electric Terminator 1490076-2.
3 Weatherproof.

Bulkhead Jacks for Semi-Rigid Cable

Rear Mount



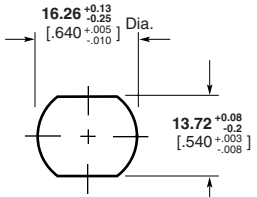

Maximum Panel Thickness **6.35** [.250]

Recommended Panel Cutout

Front Mount



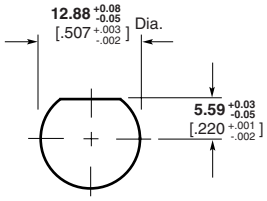

Maximum Panel Thickness **6.35** [.250]

Recommended Panel Cutout

RG/U Cable	Termination Type	Body Plating	M39012/ Military No. and/or Comments	Dim. L	Integral Die Hand Tool	Part No.
402 Semi-Rigid/.141	Crimp	Nickel	Rear Mount	**29.37** 1.156	*	**228658-1**
	Solder	Pass. Gold	Rear Mount	—	*	**6057159-1**
	Solder	Nickel	Rear Mount	**25.4** 1.00	—	**6057176-1**
405 Semi-Rigid/.085	Solder	Nickel	Rear Mount	**33.9** 1.335	—	**6057165-1**

*Tooling—Hand Tool No. 59980-1, Requires (2) Crimping Dies No. 312253-1 and (1) Locator No. 220220-2.

BELDEN is a trademark of Belden Wire and Cable Company.

Note: Part Numbers are RoHS compliant except: ♦ Indicates non-RoHS compliant.

Catalog 1307191
Revised 3-07

www.tycoelectronics.com

Dimensions are in millimeters and inches unless otherwise specified. Values in brackets are standard equivalents.

Dimensions are shown for reference purposes only. Specifications subject to change.

USA: 1-800-522-6752
Canada: 1-905-470-4425
Mexico: 01-800-733-8926
C. America: 52-55-1106-0803

South America: 55-11-2103-6000
Hong Kong: 852-2735-1628
Japan: 81-44-844-8013
UK: 44-8706-080-208

N Series Connectors, 50 Ohm (Continued)

Jack, Panel Mount

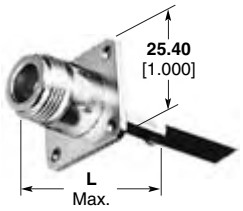

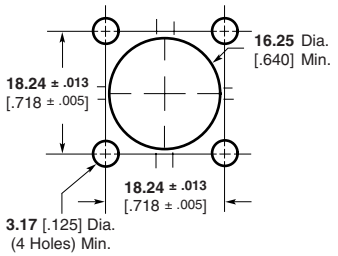

Recommended Panel Cutout

RG/U Cable	Termination Type	Body Plating	Dim. L	Integral Die Hand Tool	Hex Across Flats		Notes	Part No.
					Center	Braid		
58A, 58C	Hex Crimp	Nickel	**41.28** 1.625	58436-1	**1.73** .068	**5.41** .213	—	**5415252-1**
142, 142A, 142B	Hex Crimp	Nickel	**41.28** 1.625	58436-1	**1.73** .068	**5.41** .213	—	**5415252-2**
8, 213	Hex Crimp	Nickel	**41.28** 1.625	58485-1	**2.54** .100	**10.90** .429	—	**5415252-3**
9, 214	Hex Crimp	Nickel	**41.28** 1.625	58485-1	**2.54** .100	**10.90** .429	—	**5415252-4**
RG 225	O Crimp	Silver	**49.20** 1.937	220015-1	—	—	3	**5225089-4**

Note: [3] Weatherproof.

Panel Jacks, Solder

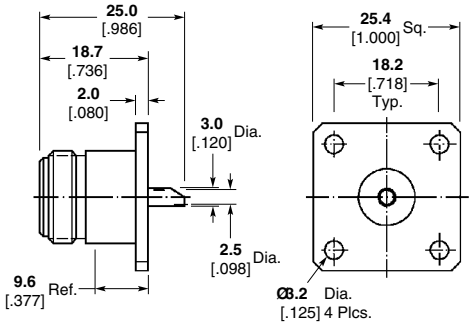

Body Plating	Part No.
Nickel	**1057284-1**
Nickel	**1057290-1***

*No solder cup — dielectric protrudes.

Panel Plug, Solder

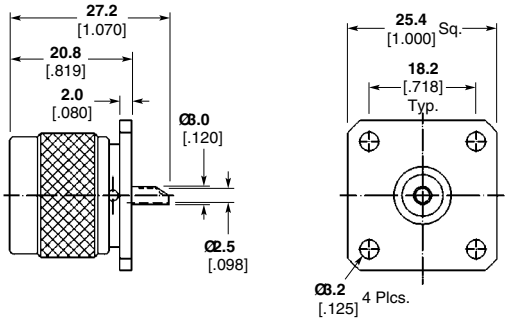

Body Plating	Part No.
Nickel	**1057275-1**
Nickel	**1057279-1***
Nickel	**1057277-1***

*No solder cup — dielectric protrudes.

Note: Part Numbers are RoHS compliant except: ♦ Indicates non-RoHS compliant.

Catalog 1307191
Revised 3-07

www.tycoelectronics.com

Dimensions are in millimeters and inches unless otherwise specified. Values in brackets are standard equivalents.

Dimensions are shown for reference purposes only. Specifications subject to change.

USA: 1-800-522-6752
Canada: 1-905-470-4425
Mexico: 01-800-733-8926
C. America: 52-55-1106-0803

South America: 55-11-2103-6000
Hong Kong: 852-2735-1628
Japan: 81-44-844-8013
UK: 44-8706-080-208

N Series Connectors, 50 Ohm (Continued)

Panel Mount Jack, Press-Fit

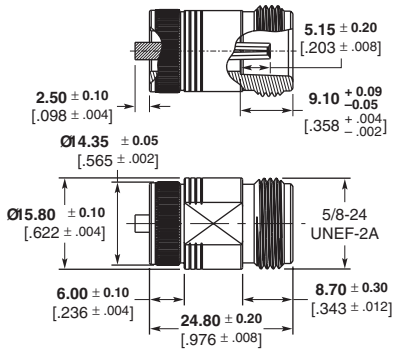

Body Plating	Contact	Dielectric	Part No.
White bronze	Gold	PTFE	**1460055-1**

Panel Mount Jack, Screw-In

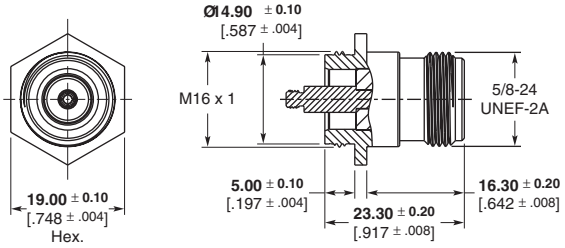

Body Plating	Contact	Dielectric	Part No.
White bronze	Gold	PTFE	**1460118-1**[1]
White bronze	Gold	PTFE	**1460118-2**[2]
White bronze	Gold	PTFE	**1460118-3**[3]

Notes: 1. Without TUF-LOC Adhesive
2. With TUF-LOC Adhesive around M3 thread
3. With TUF-LOC Spot on M3 thread

Feedthru Jack Adapter

(Jack-Jack)

Plating

Body — Nickel
Dielectric — General purpose polypropylene
Contact — Gold plated



Part Number
227945-2

Inter-Series Adapters

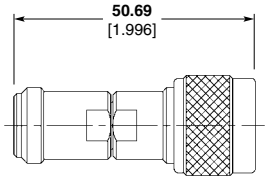

Jack-Plug

Type	Body Plating	Contact	Dielectric	Part No.
Jack-Plug	Stainless steel/ passivate	Gold	PTFE	**1057374-1**

Note: Part Numbers are RoHS compliant except: ♦ Indicates non-RoHS compliant.

Catalog 1307191
Revised 3-07

www.tycoelectronics.com

Dimensions are in millimeters and inches unless otherwise specified. Values in brackets are standard equivalents.

Dimensions are shown for reference purposes only. Specifications subject to change.

USA: 1-800-522-6752
Canada: 1-905-470-4425
Mexico: 01-800-733-8926
C. America: 52-55-1106-0803

South America: 55-11-2103-6000
Hong Kong: 852-2735-1628
Japan: 81-44-844-8013
UK: 44-8706-080-208

Quick Lock N (QLN) Series Connectors

Product Facts

- **Similar performance and applications to standard N Series**
- **Time saving and user friendly snap on/off mating**
- **Excellent performance to 6 GHz**
- **No torquing of connector required**
- **Free rotation of mated connection**
- **Higher packaging density can be achieved**
- **Fully compatible with Huber&Suhner and Radiall QN Series QLF® connectors***



Description

Snap-on version of the popular N Series connector

- Snap-on interface facilitates assembly
- Same dependable performance as standard N connector

Applications

- Cellular & PCS Base Stations
- Broadcast equipment
- Telephony applications, WLAN
- Instrumentation and remote measuring equipment
- Mil Aero, SatCom, Radar

Material and Finish

Shell — Brass, plated white bronze

Male Pin Center Contact — Brass, plated gold

Female Socket Center Contact — Beryllium copper, plated gold

Outer Contact — Phosphor bronze, plated white bronze

Insulators — PTFE or PFA

Electrical Characteristics

Characteristic Impedance — 50 ohms

Frequency Range — DC to 6 GHz

Voltage Standing Wave Ratio (VSWR) — 1.12 max. DC to 3 GHz

Insertion Loss — 0.15 dB max. DC to 3 GHz

Rated Voltage — 1000 VAC rms, 50 Hz (at sea level)

Insulation Resistance — 5000 megohms min.

Contact Resistance — Center Contact — 1.5 milliohms max. Outer Contact — 1.5 milliohms max.

Mechanical Characteristics

Engagement Force — 30 N typical

Disengagement Force — 30 N typical

Interface Retention Force — 450 N min.

Contact Captivation — 28 N min.

Durability — 100 cycles min.

Environmental Characteristics

Operating Temperature — –40°C to +125°C (cable dependent)

Thermal Shock — IEC 60169 para. 16.4

Corrosion — MIL-STD-202, Method 101, Condition B

Vibration — IEC-1169-1 para. 9.3.3 (10-500 Hz, 5g)

IP Rating for Interface — IP68 (connector dependent)

Related Product Data

Internet — http://tycoelectronics.com/products/rfcoax

Product Specification/Design Objectives — 108-2281

* QN and QLF are registered trademarks of Huber&Suhner, Inc. and Radiall S.A.. Huber&Suhner, Inc. and Radiall S.A. are not affiliated with the QLN product.

Catalog 1307191
Revised 3-07

www.tycoelectronics.com

Dimensions are in millimeters and inches unless otherwise specified. Values in brackets are standard equivalents.

Dimensions are shown for reference purposes only. Specifications subject to change.

USA: 1-800-522-6752
Canada: 1-905-470-4425
Mexico: 01-800-733-8926
C. America: 52-55-1106-0803

South America: 55-11-2103-6000
Hong Kong: 852-2735-1628
Japan: 81-44-844-8013
UK: 44-8706-080-208

Quick Lock N (QLN) Series Connectors (Continued)

Semi-Rigid Cable — Direct Solder Attachment

Straight Cable Plug

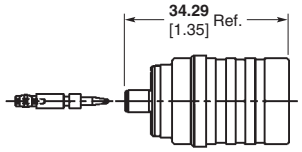

Cable	Part No.
RG 402	**1274805-1**

Bulkhead Cable Jack

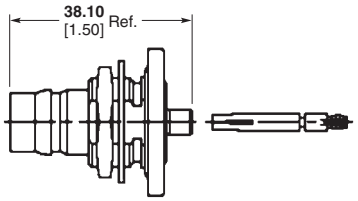

Cable	Part No.
RG 402	**1274806-1**

Flexible Cable — Crimp Attachment

Straight Cable Plug

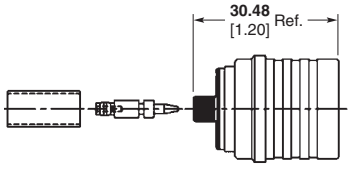

Cable	Part No.
RG 58	**1274688-1**
RG 142	**1274688-2**
LMR 240	**1274688-3**

Straight Cable Jack

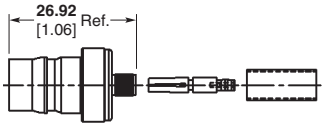

Cable	Part No.
RG 58	**1274689-1**
RG 142	**1274689-2**
LMR 240	**1274689-3**

Right-Angle Cable Plug

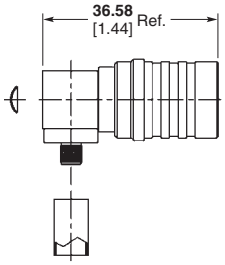

Cable	Part No.
RG 58	**1274804-1**
RG 142	**1274804-2**
LMR 240	**1274804-3**

Bulkhead Cable Jack

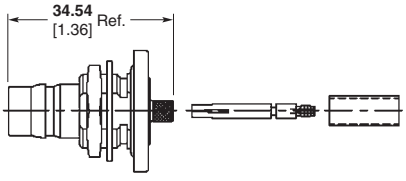

Cable	Part No.
RG 58	**1274734-1**
RG 142	**1274734-2**
LMR 240	**1274734-3**

4-Hole Square Flange Cable Jack

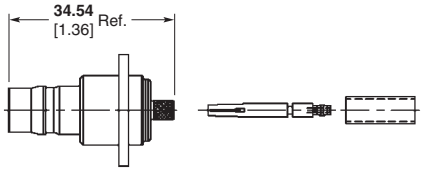

Cable	Part No.
RG 58	**1274735-1**
RG 142	**1274735-2**
LMR 240	**1274735-3**

Note: Part Numbers are RoHS compliant except: ♦ Indicates non-RoHS compliant.

Quick Lock N (QLN) Series Connectors (Continued)

Panel Mount Receptacles

Press-Fit Bulkhead Jack Receptacle — Solder Terminal

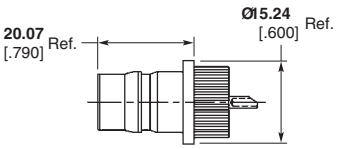

Part Number
1274807-1

4-Hole Flange Jack Receptacle — Solder Terminal

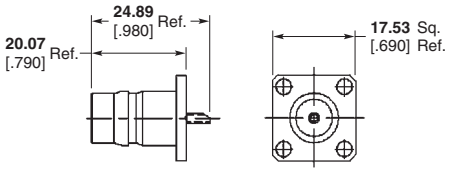

Part Number
1274662-1

Adapters — Between Series

QLN Plug to N Series Jack

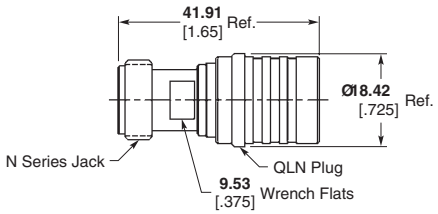

Part Number
1274808-1

Note: Part Numbers are RoHS compliant except: ♦ Indicates non-RoHS compliant.

Catalog 1307191
Revised 3-07

www.tycoelectronics.com

Dimensions are in millimeters and inches unless otherwise specified. Values in brackets are standard equivalents.

Dimensions are shown for reference purposes only. Specifications subject to change.

USA: 1-800-522-6752
Canada: 1-905-470-4425
Mexico: 01-800-733-8926
C. America: 52-55-1106-0803

South America: 55-11-2103-6000
Hong Kong: 852-2735-1628
Japan: 81-44-844-8013
UK: 44-8706-080-208

TNC Connectors

Product Facts

Hex Crimp and O Crimp Connectors

- **50 and 75 ohm commercial versions available**
- **Provides excellent performance at frequencies up to 7 GHz**
- **Low cost commercial type available**
- **Commercial type is smaller and lighter weight**
- **Tarnish resistant nickel finish**
- **Choice of dielectric materials**
- **Standard and weatherproof versions available**
- **Plugs available for high temperature cable**

Single Crimp Connectors

- **Fast application–one crimping operation terminates inner conductor, outer braid and cable support**
- **Low application cost**

Connectors for Semi-Rigid Cable

- **Crimp and solder versions available**
- **Standard cable stripping dimensions**
- **Universal cable termination common to all configurations**

Listed under the Component Program of Underwriters Laboratories Inc., File No. E81956

PC Board connectors are recognized under the Component Program of Underwriters Laboratories Inc., File No. E81956

Certified by Canadian Standards Association File No. LR 7189

The Tyco Electronics TNC RF connector family, with 7/16-28 threaded couplings, provides low noise levels and optimum stability, and can withstand the shock and vibration often present in hostile environments.

Available in both 50 and 75 ohm versions, these connectors feature numerous styles including cable plugs and jacks, adapters and printed circuit board connectors. These connectors accept a wide range of coaxial cables and are intermateable with industry standard connectors designed to MIL-C-39012 specifications.

Single crimp connectors provide reduced application time and lower applied costs. This is accomplished by using Tyco Electronics one-crimp operation tooling which simultaneously terminates the inner conductor, outer braid and cable support with one controlled stroke.

Tyco Electronics can also supply low-cost alternatives with a commercial type product line. These connectors are designed around the mil-specifications, offering comparable mechanical and electrical performance.



Between Series Adapters

For TNC Between Series Adapters, see pages 251-260.

Related Product Data

Military Category — All crimp connectors are Category B Type (Tyco Electronics Crimp Tooling), unless otherwise noted.

Packaging — All Mil-Type connectors are packaged individually and all Commercial connectors are bulk packaged unless otherwise noted.

Catalog 1307191
Revised 3-07

www.tycoelectronics.com

Dimensions are in millimeters and inches unless otherwise specified. Values in brackets are standard equivalents.

Dimensions are shown for reference purposes only. Specifications subject to change.

USA: 1-800-522-6752
Canada: 1-905-470-4425
Mexico: 01-800-733-8926
C. America: 52-55-1106-0803

South America: 55-11-2103-6000
Hong Kong: 852-2735-1628
Japan: 81-44-844-8013
UK: 44-8706-080-208

TNC Connectors (Continued)

Specifications

Characteristics	Single Crimp (MIL Type)	Category B O Crimp (MIL Type)	Commercial O Crimp & Hex Crimp 50 & 75 Ohm	Commercial PCB	Commercial Solder Jacks	Semi-Rigid	Solder Clamp
Electrical							
Impedance, Nom. (Ohms)	50	50	50	50	50	50	50
Working Voltage (Volts RMS)	500	500	500	500	500	335	500
Contact Resistance (Milliohms)	Inner: 1.5 Outer: 3	Inner: 1.5 Outer: 0.2	Inner: 2.0 Outer: 0.3	Inner: 6.0 Outer: 3.0	Inner: 2.75 Outer: 1.0	Inner: 1.5 Outer: 0.2	Inner: 1.5 Outer: 0.2
Initial Insulation Resistance (Megohms)	5000	5000	5000	5000	5000	5000	5000
Dielectric Withstanding Voltage (VAC)	1500	1500	1500	1500	1500	1500	1500
Corona Level at 70,000 ft. (Picocoulombs)	5 max. @ 375 VRMS	5 max. @ 375 VRMS	5 max. @ 375 VRMS	—	—	5 max. @ 375 VRMS	5 max. @ 375 VRMS
RF Leakage, Max. (dB)	—	60 @ 2-3 GHz	55 @ 2-3 GHz	—	—	60 @ 2-3 GHz	55 @ 2-3 GHz
RF Insertion Loss, Max. (dB)	—	0.18 @ 9 GHz	0.2 @ 3 GHz	—	—	0.06 @ 3-6 GHz	0.2 @ 3 GHz
Frequency Range (GHz)	0-4	0-11	0-7	0-4	0-4	0-15	0-11
VSWR in Frequency Range Max.	1.35	1.3	1.40	—	—	1.35	1.30 @ 4 GHz
Mechanical							
Force to Engage/ Couple, lbs. [N]	10/2 [44.5/8.9]	2/2 [8.9/8.9]	6/6 [26.7/26.7]	—	—	2 [.023]	2 [.023]
Coupling Nut Retention, Min. lbs. [N]	100 [444.8]	100 [444.8]	60 [266.9]	—	—	100 [444.8]	100 [444.8]
Cable Retention, lbs. [N]	60 [266.9] RG 58C/U	60 [266.9] RG 58C/U	60 [266.9] RG 58C/U	60 [266.9] (PCB Ret)	—	60 [266.9]	40 [178.0]
Durability (Cycles)	500	500	500	500	500	500	500
Jam Nut Mounting Torque, Max. lbs. [N•m]	25 [2.8]	25 [2.8]	25 [2.8]	25 [2.8]	25 [2.8]	25 [2.8]	25 [2.8]
Environmental							
Temperature Range, Operating (C°)	-65 to +85	-65 to +165[1] -55 to +85[2]	-55 to +85	-55 to +85	-65 to +165	-65 to +105	-65 to +165
Vibration	MIL-STD-202 Method 204 Cond. B	MIL-STD-202 Method 204 Cond. B	MIL-STD-202 Method 204 Cond. B	MIL-STD-202 Method 201A Cond. A	MIL-STD-202 Method 204 Cond. B	MIL-STD-202 Method 202 Cond. B	MIL-STD-202 Method 202 Cond. B
Physical Shock	MIL-STD-202 Method 213 Cond. G, (50 G's)	MIL-STD-202 Method 213 Cond. I, (100 G's)	MIL-STD-202 Method 213 Cond. I, (100 G's)	MIL-STD-202 Method 213 Cond. I, (100 G's)	MIL-STD-202 Method 213 Cond. I, (100 G's)	MIL-STD-202 Method 213 Cond. I	MIL-STD-202 Method 213 Cond. I
Thermal Shock	MIL-STD-202 Method 107	MIL-STD-202 Method 107 Cond. B	MIL-STD-20 Method 107 Cond. A	MIL-STD-202 Method 107	MIL-STD-202 Method 107	MIL-STD-202 Method 107	MIL-STD-202 Method 107
Moisture Resistance	MIL-STD-202 Method 106	MIL-STD-202 Method 106	MIL-STD-202 Method 106 Type II	MIL-STD-202 Method 106	MIL-STD-202 Method 106	MIL-STD-202 Method 106	MIL-STD-202 Method 106
Salt Spray	MIL-STD-202 Method 101 Cond. B	MIL-STD-202 Method 101 Cond. B	MIL-STD-202 Method 101 Cond. B	MIL-STD-202 Method 101 Cond. B	MIL-STD-202 Method 101 Cond. B	MIL-STD-202 Method 101 Cond. B	MIL-STD-202 Method 101 Cond. B
Product Specification	—	108-12001	108-12046	—	—	108-12032	—

[1]Assembled to cable with polytetrafluorethylene dielectric.
[2]Assembled to cable with polyethylene dielectric.

Catalog 1307191
Revised 3-07

www.tycoelectronics.com

Dimensions are in millimeters and inches unless otherwise specified. Values in brackets are standard equivalents.

Dimensions are shown for reference purposes only. Specifications subject to change.

USA: 1-800-522-6752
Canada: 1-905-470-4425
Mexico: 01-800-733-8926
C. America: 52-55-1106-0803

South America: 55-11-2103-6000
Hong Kong: 852-2735-1628
Japan: 81-44-844-8013
UK: 44-8706-080-208

TNC Connectors (Continued)

Specifications (Continued)

Characteristics	Single Crimp (MIL Type)	Category B O Crimp (MIL Type)	Commercial O Crimp & Hex Crimp 50 & 75 Ohm	Commercial PCB	Commercial Solder Jacks	Semi-Rigid	Solder Clamp
Connector Material							
Collar	Brass QQ-B-626	Brass QQ-B-626	Brass QQ-B-626	—	—	Brass QQ-B-626	Brass QQ-B-626
Outer Contact (Plug)	Phos. Bronze QQ-B-750 Beryl. Copper QQ-C-530	Phos. Bronze QQ-B-750 Beryl. Copper QQ-C-530	Brass MIL-C-21768	—	—	Brass QQ-B-626	Brass QQ-B-626
Outer Contact (Jack)	Brass QQ-B-626	Brass QQ-B-626	Zinc QQ-Z-363	Zinc QQ-Z-363	Zinc QQ-Z-363	Brass QQ-B-626	Brass QQ-B-626
Dielectric	PTFE MIL-P-19468	PTFE MIL-P-19468	Polyethylene Polypropylene Gen. Purpose	Polypropylene Gen. Purpose[1]	PTFE MIL-P-19468 Polyester PBT MIL-P-24519	PTFE MIL-P-19468	PTFE MIL-P-19468
Center Contact (Plug)	Brass QQ-B-626	Brass QQ-B-626	Brass QQ-B-626	—	—	Brass QQ-B-626	Brass QQ-B-626
Center Contact (Jack)	Beryl. Copper ASTM-B-643, QQ-C-530	Beryl. Copper ASTM-B-643, QQ-C-530	Beryl. Copper QQ-C-530	Phos. Bronze QQ-B-570	Phos. Bronze QQ-B-570	Beryl Copper QQ-C-530	Beryl Copper QQ-C-530
Gasket	Silicon Rubber QQ-R-765	Silicon Rubber QQ-R-765	Silicon Rubber QQ-R-765	—	—	Silicone Rubber QQ-R-765	Silicone Rubber QQ-R-765
Ferrule	Copper QQ-C-576	Copper QQ-C-576	Copper QQ-C-576	—	—	—	—
Connector Primary Finishes[2]							
Collar	Silver QQ-S-365	Silver QQ-S-365	Bright Nickel QQ-N-290	—	—	Nickel QQ-N-290	Nickel QQ-N-290
Outer Contact (Plug & Jack)	Silver QQ-S-365	Bright Nickel QQ-N-290	Bright or Matte Nickel QQ-N-290	Bright Nickel QQ-N-290	Bright Nickel QQ-N-290	Nickel QQ-N-290	Nickel QQ-N-290
Center Contact (Plug & Jack)	Gold MIL-G-45204	Silver QQ-S-365	Tin Lead, ASTM-B-545 Silver, QQ-S-365 Gold, MIL-G-45204	Tin Lead, ASTM-B-545 Silver, QQ-S-365 Gold, MIL-G-45204	Tin Lead, ASTM-B-545 Silver, QQ-S-365 Gold, MIL-G-45204	Gold MIL-G-45204	Gold MIL-G-45204
Ferrule	Silver QQ-S-365	Gold MIL-G-45204	Tin Lead ASTM-B-5	—	—	—	—

[1]Several pc board connectors have an outer polyester PBT insulator per MIL-P-24519.
[2]If several finishes are listed, refer to individual catalog page(s) or customer drawings for exact specifications.

Catalog 1307191
Revised 3-07

www.tycoelectronics.com

Dimensions are in millimeters and inches unless otherwise specified. Values in brackets are standard equivalents.

Dimensions are shown for reference purposes only. Specifications subject to change.

USA: 1-800-522-6752
Canada: 1-905-470-4425
Mexico: 01-800-733-8926
C. America: 52-55-1106-0803

South America: 55-11-2103-6000
Hong Kong: 852-2735-1628
Japan: 81-44-844-8013
UK: 44-8706-080-208

TNC Connectors, 50 Ohm

Plugs, Crimp

Hex Crimp and O Crimp

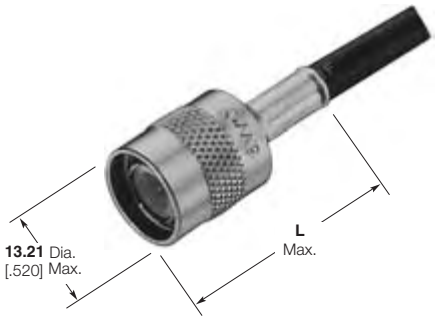

MIL Type O Crimp Weatherproof

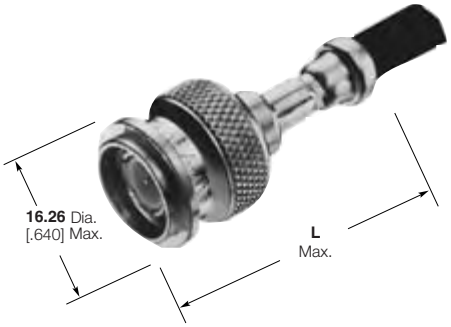

RG/U Cable	Termination Type	Center Contact Plating	Body Plating	Dielectric	Style	Comments	Dim. L	CERTI-CRIMP Hand Tool with Integral Die	Interchangeable Dies for PRO-CRIMPER Hand Tool 354940-1 or PRO-CRIMPER Adapter 679304-1	Part No.
174, 188, 188A, 316	Hex Crimp	Gold	Nickel	Polypropylene	Commercial	—	**31.24** 1.230	—	58436-3	**5222506-5**
179, 179A, 179B 161, 187, 187A BELDEN 9221	Hex Crimp	Gold	Nickel	Polypropylene	Commercial	—	**31.24** 1.230	—	58436-3	**5222506-6**
58, 58A, 58B, 58C	Hex Crimp	Gold	Nickel	Polypropylene	Commercial	—	**31.25** 1.230	—	58436-1[1]	**5222506-1**
	O Crimp	Gold	Nickel	PTFE	MIL Type	Weatherproof	**34.93** 1.375	220045-2	—	**5225555-2**
142, 142A 142B, 400	O Crimp	Gold	Nickel	PTFE	MIL Type	Weatherproof	**34.93** 1.375	220045-2	—	**5225555-6**
8, 8A, 213	O Crimp	Gold	Nickel	PTFE	MIL Type	Weatherproof	**50.8** 2.000	220015-1	—	**5225555-7**
9, 9A, 9B, 214	O Crimp	Gold	Nickel	PTFE	MIL Type	Weatherproof	**50.8** 2.000	220015-1	—	**5225555-8**

[1]Order Tyco Electronics PRO-CRIMPER Coaxial Hex Crimp Hand Tool assembly 58433-2, which includes dies 58436-1.

BELDEN is a trademark of Belden Wire and Cable Company.

Note: Part Numbers are RoHS compliant except: ♦ Indicates non-RoHS compliant.

TNC Connectors, 50 Ohm (Continued)

Plugs for Semi Rigid-Cable

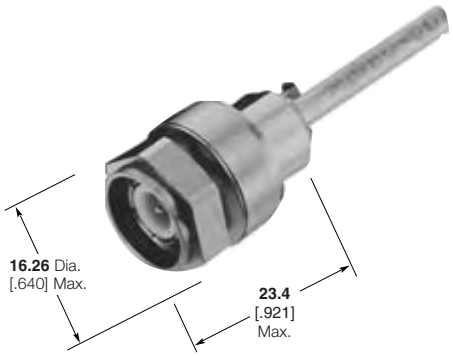

Crimp Type

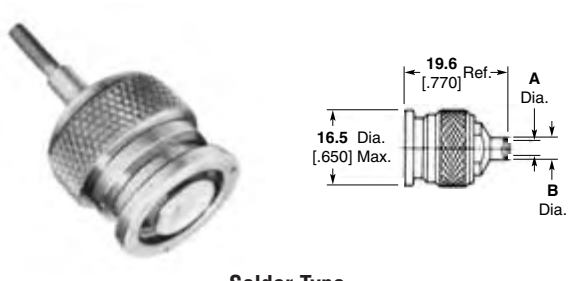

Solder Type

RG/U Cable	Termination Type	Center Contact Plating	Body Plating	Dielectric	Style	Comments	Dim. A	Dim. B	Interchangeable Dies for PRO-CRIMPER Hand Tool 354940-1 or PRO-CRIMPER Adapter 679304-1	Interchangeable Dies for Hand Tool 69710-1 & 626 Pneu. Head 318161-1	Part No.
405 Semi-Rigid/ **2.18** [.086]	Solder	Gold	Passivate	Solid PTFE	MIL Type	—	**2.3** .089	**3.0** .120	—	[3]	**1057635-1**
402 Semi-Rigid/ **3.66** [.141]	Crimp	Gold	Nickel	PTFE	Commercial	Weather proof		—	[1]	[2]	**228179-3**
RG 402/U .141 **3.66** [.141]	Solder	Gold	Gold	Solid PTFE	MIL Type	—	**3.7** .144	**4.6** .180	—	[3]	**1057631-1**

[1]Hand Tool 59980-1, Requires (2) Crimping Dies 312253-1 and (1) Locator 312644-1.
[2]Pneumatic Tool 58318-1, Requires (2) Crimping Dies 313720-1 and (1) Locator 312645-1.
[3]Refer to Recommended Assembly Tools in Tool Section.

Note: Part Numbers are RoHS compliant except: ♦ Indicates non-RoHS compliant.

Catalog 1307191
Revised 3-07

www.tycoelectronics.com

Dimensions are in millimeters and inches unless otherwise specified. Values in brackets are standard equivalents.

Dimensions are shown for reference purposes only. Specifications subject to change.

USA: 1-800-522-6752
Canada: 1-905-470-4425
Mexico: 01-800-733-8926
C. America: 52-55-1106-0803

South America: 55-11-2103-6000
Hong Kong: 852-2735-1628
Japan: 81-44-844-8013
UK: 44-8706-080-208

TNC Connectors, 50 Ohm (Continued)

Right-Angle Plugs, Crimp

O Crimp



MIL Type
O Crimp
Weatherproof

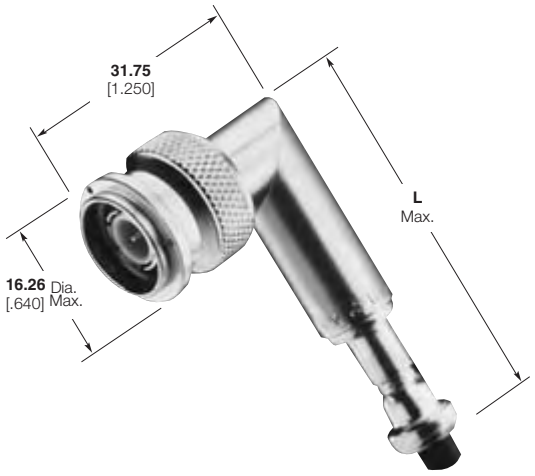

RG/U Cable	Termination Type	Center Contact Plating	Body Plating	Dielectric	Style	Comments	Dim. L	CERTI-CRIMP Hand Tool with Integral Die	Interchangeable Dies for PRO-CRIMPER Hand Tool 354940-1 or PRO-CRIMPER Adapter 679304-1	Part No.
174, 174A, 188 188A, 316	O Crimp	Gold	Nickel	Polymethyl-pentene	Commercial	—	**38.23** 1.505	—	318450-2	**5414173-3**
58, 58A, 58B 58C	O Crimp	Gold	Nickel	PTFE	MIL Type	Weatherproof	**47.63** 1.875	220045-2	—	**5225559-2**
55, 55A, 55B 223	O Crimp	Gold	Nickel	Polymethyl-pentene	Commercial	—	**38.23** 1.505	—	220189-1	**5414173-6**
142, 142A, 142B 400	O Crimp	Gold	Silver	PTFE	MIL Type	Weatherproof	**47.63** 1.875	220045-2	—	**5225554-6**
8, 8A, 213	O Crimp	Gold	Nickel	PTFE	MIL Type	Weatherproof	**63.5** 2.500	220015-1	—	**5225559-8**
393, 225	O Crimp	Gold	Silver	PTFE	MIL Type	Weatherproof	**63.5** 2.500	220015-1	—	**1-5225554-1**
9, 9A, 9B, 214	O Crimp	Gold	Silver	PTFE	MIL Type	—	**59.52** 2.343	220015-1	—	**5225349-9**

Note: Part Numbers are RoHS compliant except: ♦ Indicates non-RoHS compliant.

Catalog 1307191
Revised 3-07

www.tycoelectronics.com

Dimensions are in millimeters and inches unless otherwise specified. Values in brackets are standard equivalents.

Dimensions are shown for reference purposes only. Specifications subject to change.

USA: 1-800-522-6752
Canada: 1-905-470-4425
Mexico: 01-800-733-8926
C. America: 52-55-1106-0803

South America: 55-11-2103-6000
Hong Kong: 852-2735-1628
Japan: 81-44-844-8013
UK: 44-8706-080-208

TNC Connectors, 50 Ohm (Continued)

Jacks, Crimp

O Crimp

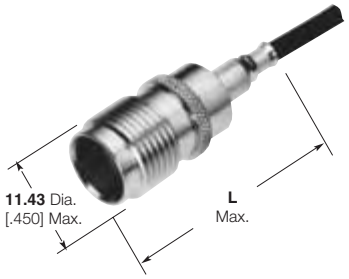

**MIL Type
O Crimp
Weatherproof**

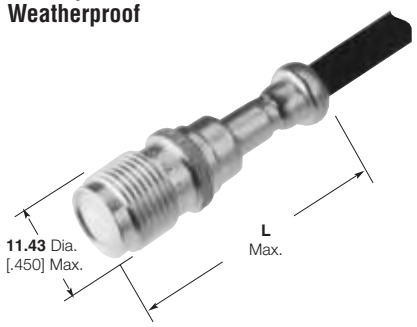

RG/U Cable	Termination Type	Center Contact Plating	Body Plating	Dielectric	Style	Comments	Dim. L	CERTI-CRIMP Hand Tool with Integral Die	Interchangeable Dies for PRO-CRIMPER Hand Tool 354940-1 or PRO-CRIMPER Adapter 679304-1	Part No.
174, 174A, 188 188A, 316	O Crimp	Gold	Nickel	Polymethyl-pentene	Commercial	—	**30.48** 1.200	—	318450-2	**5414171-3**
58, 58A, 58B 58C	O Crimp	Gold	Silver	PTFE	MIL Type	Weatherproof	**35.72** 1.406	220045-2*	—	**225551-2**
141, 141A, 303	O Crimp	Gold	Silver	PTFE	MIL Type	Weatherproof	**35.72** 1.406	220045-2*	—	**225551-5**
55, 55A, 55B 223	O Crimp	Gold	Nickel	Polymethyl-pentene	Commercial	—	**29.85** 1.175	—	220189-1	**414171-6**
142, 142A, 142B 400	O Crimp	Gold	Silver	PTFE	MIL Type	Weatherproof	**35.72** 1.406	220045-2*	—	**225551-6**

*Battery, Pneumatic

Jacks, Solder/Clamp

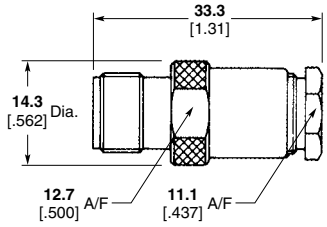

RG/U Cable	Termination Type	Center Contact Plating	Body Plating	Dielectric	Style	Part No.
RG 58C/U, RG 141 A/U	Solder/Clamp	Gold	Silver	PTFE	MIL Type	**1312569-1**

Note: Part Numbers are RoHS compliant except: ♦ Indicates non-RoHS compliant.

Catalog 1307191
Revised 3-07

www.tycoelectronics.com

Dimensions are in millimeters and inches unless otherwise specified. Values in brackets are standard equivalents.

Dimensions are shown for reference purposes only. Specifications subject to change.

USA: 1-800-522-6752
Canada: 1-905-470-4425
Mexico: 01-800-733-8926
C. America: 52-55-1106-0803

South America: 55-11-2103-6000
Hong Kong: 852-2735-1628
Japan: 81-44-844-8013
UK: 44-8706-080-208

TNC Connectors, 50 Ohm (Continued)

Bulkhead Jacks, Crimp

Single Crimp

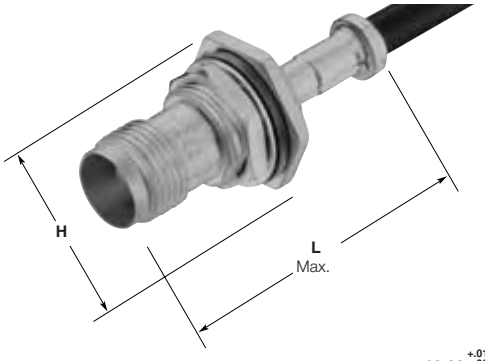

O Crimp

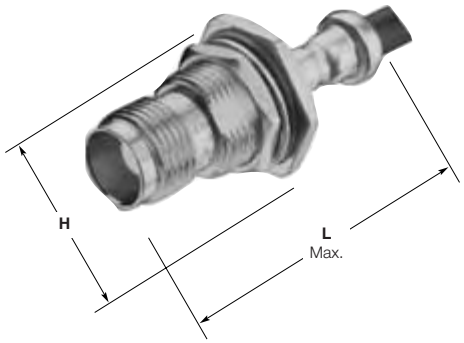

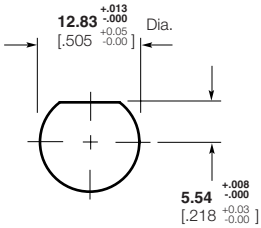

Maximum Panel Thickness Single Crimp **3.18** [.125];
Dual Crimp **6.35** [.250]

Recommended Panel Cutout

H= **11/16** [.6875] max. across flats, **20.32** [.800] max. across points.

RG/U Cable	Termination Type	Center Contact Plating	Body Plating	Dielectric	Style	Comments	Dim. L	CERTI-CRIMP Hand Tool with Integral Die	Interchangeable Dies for PRO-CRIMPER Hand Tool 354940-1 or PRO-CRIMPER Adapter 679304-1	Part No.
174, 174A, 316 188, 188A	O Crimp	Gold	Nickel	Polymethyl-pentene	Commercial	—	**34.93** 1.375	—	318450-2	**5414168-3**
179, 179A, 179B 161, 187, 187A BELDEN 9221	Single Crimp	Gold	Nickel	PTFE	MIL Type	—	**38.1** 1.500	—	91910-1	**5331238**
RD 188, 316 Double Braid	O Crimp	Gold	Nickel	Polymethyl-pentene	Commercial	—	**34.93** 1.375	—	58539-1	**5414168-4**
58, 58A, 58B, 58C 141, 141A, 303	O Crimp	Gold	Nickel	Polymethyl-pentene	Commercial	—	**34.93** 1.375	—	220189-1	**5414168-1**
223 55, 55A, 55B	O Crimp	Gold	Nickel	Polymethyl-pentene	Commercial	—	**34.93** 1.375	—	220189-1	**5414168-6**
142, 142A 142B, 400	O Crimp	Gold	Nickel	Polymethyl-pentene	Commercial	—	**34.93** 1.375	—	220189-1	**5414168-5**
	O Crimp	Gold	Nickel	PTFE	MIL Type	Weatherproof	**38.1** 1.500	220045-2	—	**5225557-6**

BELDEN is a trademark of Belden Wire and Cable Company.

Note: Part Numbers are RoHS compliant except: ♦ Indicates non-RoHS compliant.

Catalog 1307191
Revised 3-07

www.tycoelectronics.com

Dimensions are in millimeters and inches unless otherwise specified. Values in brackets are standard equivalents.

Dimensions are shown for reference purposes only. Specifications subject to change.

USA: 1-800-522-6752
Canada: 1-905-470-4425
Mexico: 01-800-733-8926
C. America: 52-55-1106-0803

South America: 55-11-2103-6000
Hong Kong: 852-2735-1628
Japan: 81-44-844-8013
UK: 44-8706-080-208

TNC Connectors, 50 Ohm (Continued)

Bulkhead Jacks for Semi-Rigid Cable, Rear Mount

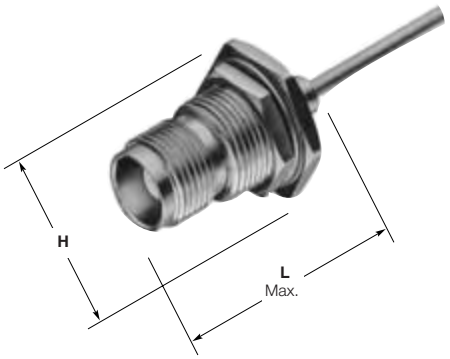

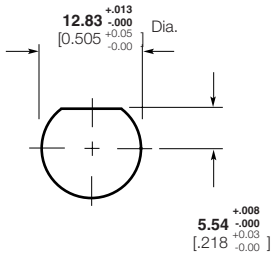

Maximum Panel Thickness **6.35** [.250]

Recommended Panel Cutout

H= **17.45** [.687] max. across flats, **20.32** [.800] max. across points.

RG/U Cable	Termination Type	Center Contact Plating	Body Plating	Dielectric	Style	Dim. L	Part No.
402 Semi-Rigid/ **3.66** [.141]*	Crimp	Gold	Nickel	PTFE	MIL Type	**25.4** 1.000	**228502-1**

*Tooling—Hand Tool 59980-1, Requires (2) Crimping Dies 312253-1 and (1) Locator 220220-2.



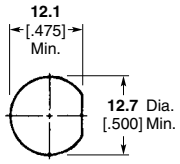

Recommended Panel Cutout

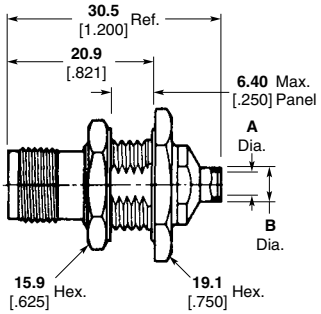

RG/U Cable	Termination Type	Center Contact Plating	Body Plating	Dielectric	Style	Dim. A	Dim. B	Part No.
RG 402/U **3.66** [.141]	Solder	Gold	Pass. Stainless Steel	Solid PTFE	MIL Type	**3.7** .144	**4.6** .180	**1057676-1**
RG 405/U **2.16** [.085]	Solder	Gold	Pass. Stainless Steel	Solid PTFE	MIL Type	**2.3** .089	**3.0** .120	**1057679-1**

Note: Part Numbers are RoHS compliant except: ♦ Indicates non-RoHS compliant.

Catalog 1307191
Revised 3-07

www.tycoelectronics.com

Dimensions are in millimeters and inches unless otherwise specified. Values in brackets are standard equivalents.

Dimensions are shown for reference purposes only. Specifications subject to change.

USA: 1-800-522-6752
Canada: 1-905-470-4425
Mexico: 01-800-733-8926
C. America: 52-55-1106-0803

South America: 55-11-2103-6000
Hong Kong: 852-2735-1628
Japan: 81-44-844-8013
UK: 44-8706-080-208

TNC Connectors, 50 Ohm (Continued)

Panel Jacks, Crimp

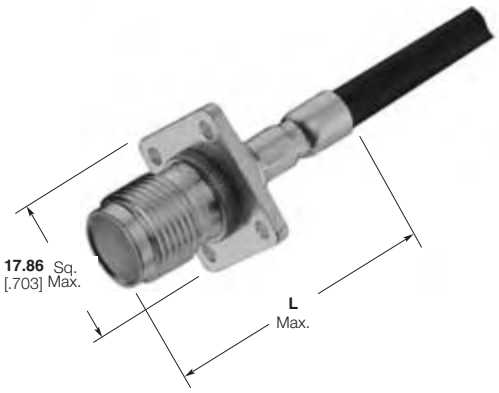

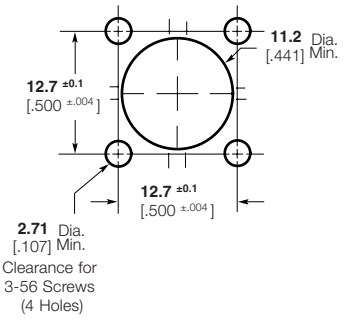

Recommended Panel Cutout

RG/U Cable	Termination Type	Center Contact Plating	Body Plating	Dielectric	Style	Dim. L	CERTI-CRIMP Hand Tool With Integral Die	Part No.
58, 58A, 58B, 58C	Crimp	Gold	Silver	PTFE	MIL Type	**34.93** 1.375	220045-2	**225348-2**

Panel Jacks for Semi-Rigid Cable



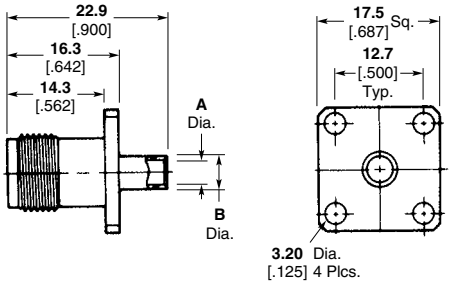

RG/U Cable	Termination Type	Center Contact Plating	Body Plating	Dielectric	Style	Dim. A	Dim. B	Part No.
RG 402/U **3.66** [.141]	Solder	Gold	Gold	PTFE	MIL Type	**3.7** .144 Min.	**4.6** .180	**1057697-1**
RG 405/U **2.16** [.085]	Solder	Gold	Gold	PTFE	MIL Type	**2.3** .089 Min.	**3.0** .120	**1057699-1**

Note: Part Numbers are RoHS compliant except: ♦ Indicates non-RoHS compliant.

Catalog 1307191
Revised 3-07

www.tycoelectronics.com

Dimensions are in millimeters and inches unless otherwise specified. Values in brackets are standard equivalents.

Dimensions are shown for reference purposes only. Specifications subject to change.

USA: 1-800-522-6752
Canada: 1-905-470-4425
Mexico: 01-800-733-8926
C. America: 52-55-1106-0803

South America: 55-11-2103-6000
Hong Kong: 852-2735-1628
Japan: 81-44-844-8013
UK: 44-8706-080-208

TNC Connectors, 50 Ohm (Continued)

Right-Angle PC Board/ Panel Mount Jacks

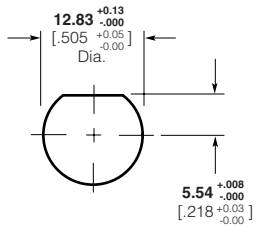

Maximum Panel Thickness **6.1** [.240]

Recommended Panel Cutout

VALOX Body

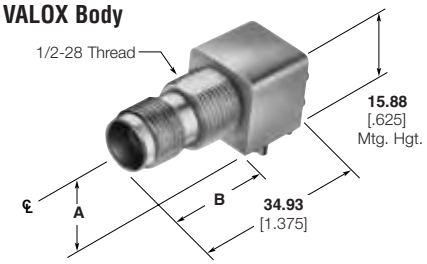

Metal Body

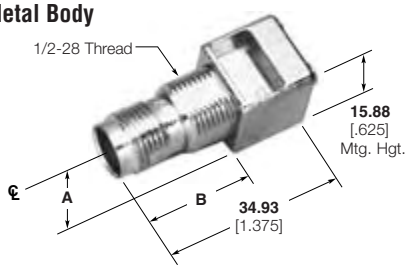

Body Material	Ω	Center Contact Plating	Dimensions A	Dimensions B	Part Numbers
VALOX, White	50	Gold	**8.56** .337	**21.21** .835	**5227818-1**
Metal	50	Gold	**8.26** .325	**20.83** .820	**5227839-1**

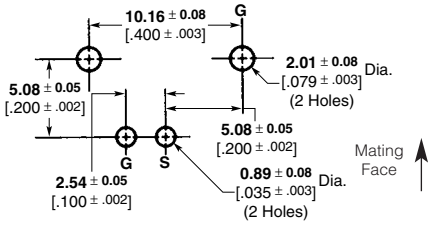

(Top View)

Recommended PC Board Layout

Vertical PC Board/ Panel Mount Jacks

*2-56 Self-Tapping Screws:
For 1.57 [3/32] or greater panel thickness
Part No. **221108-2**
For less than 1.57 [3/32] panel thickness
Part No. **221108-4**

Lockwasher and Jam Nut



Part No. 1-329632-2 **Part No. 1-329631-2**

VALOX Body

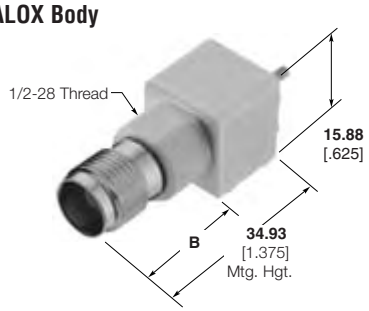

Body Material	Center Contact Plating	Dimension B	Part Number
VALOX, White	Gold	**21.21** .835	**5227820-1**

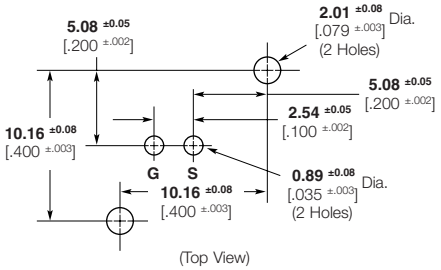

(Top View)

Recommended PC Board Layout

VALOX is a trademark of General Electric Company.

Note: Part Numbers are RoHS compliant except: ♦ Indicates non-RoHS compliant.

Catalog 1307191
Revised 3-07

www.tycoelectronics.com

Dimensions are in millimeters and inches unless otherwise specified. Values in brackets are standard equivalents.

Dimensions are shown for reference purposes only. Specifications subject to change.

USA: 1-800-522-6752
Canada: 1-905-470-4425
Mexico: 01-800-733-8926
C. America: 52-55-1106-0803

South America: 55-11-2103-6000
Hong Kong: 852-2735-1628
Japan: 81-44-844-8013
UK: 44-8706-080-208

TNC Connectors, 50 Ohm (Continued)

Right-Angle PC Board/ Mount Jacks

Plating

Body — Nickel
Center Contact — Gold
Dielectric — PTFE

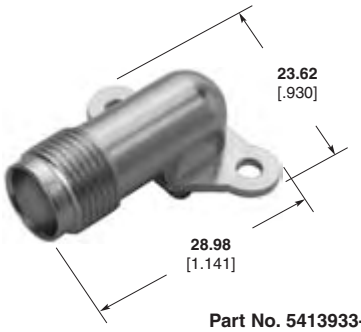

Part No. 5413933-1

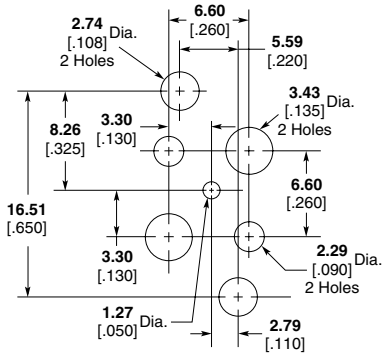

Recommended PC Board Cutout

Bulkhead Solder Jacks

Insulation Bushing

Material — Nylon
Part No. 227223-1

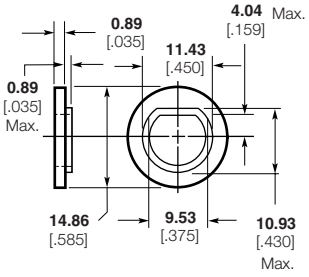

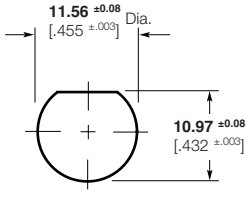

Recommended Panel Cutout (Bushing)

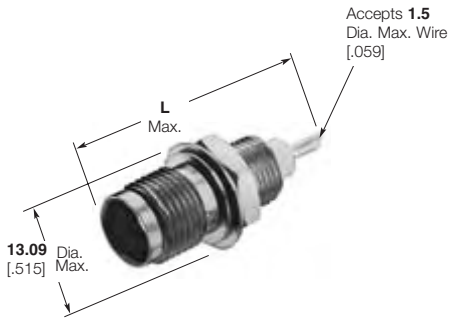

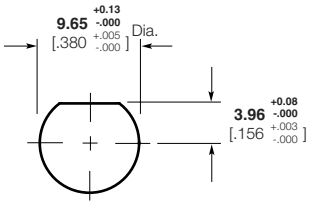

Recommended Panel Cutout (Jack)

Panel Thickness Refer to chart below.

Body Plating	Center Contact Plating	Dielectric	Dim. L	Panel Thickness	Part Number
Nickel	Gold	VALOX	**33.33** 1.312	**1.17-6.35** .046-.250	**5227764-2**

VALOX is a trademark of General Electric Company.

Note: Part Numbers are RoHS compliant except: ♦ Indicates non-RoHS compliant.

Catalog 1307191
Revised 3-07

www.tycoelectronics.com

Dimensions are in millimeters and inches unless otherwise specified. Values in brackets are standard equivalents.

Dimensions are shown for reference purposes only. Specifications subject to change.

USA: 1-800-522-6752
Canada: 1-905-470-4425
Mexico: 01-800-733-8926
C. America: 52-55-1106-0803

South America: 55-11-2103-6000
Hong Kong: 852-2735-1628
Japan: 81-44-844-8013
UK: 44-8706-080-208

TNC Connectors, 50 Ohm (Continued)

Panel Mount Jack Receptacles



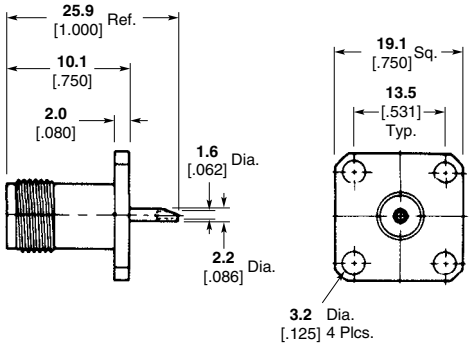

Shell	Part No.
Nickel Plated Brass	**1057775-1**[1]

[1]Captured Center Contact

Flange Mount Receptacles



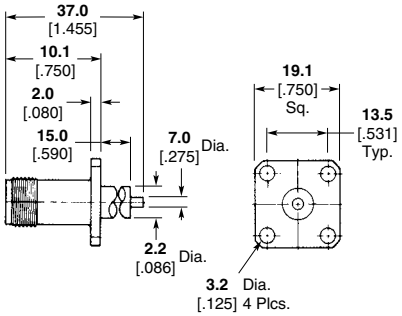

Shell	Part No.
Nickel Plated Brass	**1057780-1**[1]

[1]Captured Center Contact

Jack-Jack Adapter



Center Contact Plating	Body Plating	Dielectric	Part No.
Gold	Nickel	Polypropylene	**5221325-1**

Bulkhead Jack-Jack Adapter



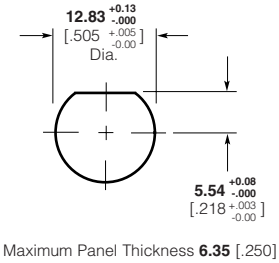

Maximum Panel Thickness **6.35** [.250]

Recommended Panel Cutout

Center Contact Plating	Body Plating	Dielectric	Part No.
Gold	Nickel	Acetal	**221500-1**

Note: Part Numbers are RoHS compliant except: ♦ Indicates non-RoHS compliant.

Catalog 1307191
Revised 3-07

www.tycoelectronics.com

Dimensions are in millimeters and inches unless otherwise specified. Values in brackets are standard equivalents.

Dimensions are shown for reference purposes only. Specifications subject to change.

USA: 1-800-522-6752
Canada: 1-905-470-4425
Mexico: 01-800-733-8926
C. America: 52-55-1106-0803

South America: 55-11-2103-6000
Hong Kong: 852-2735-1628
Japan: 81-44-844-8013
UK: 44-8706-080-208

TNC Connectors, 75 Ohm

Plugs, Crimp

These connectors have been designed for optimum performance and have a true 75 ohm impedance the complete length of the connector. The crimp die tooling listed below is different from the equivalent 50 ohm connectors.

Hex Crimp and O Crimp

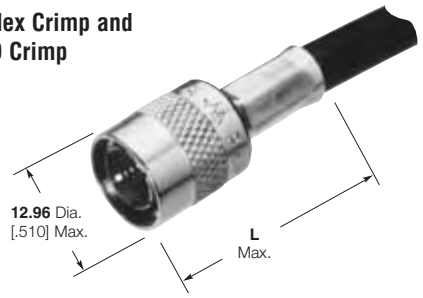

RG/U Cable	Termination Type	Center Contact Plating	Body Plating	Dielectric	Style	Dim. L	Interchangeable Dies for PRO-CRIMPER Hand Tool 354940-1 or PRO-CRIMPER Adapter 679304-1	Part No.
179, 179A, 179B, 187, 187A, BELDEN 9221	O Crimp	Gold	Nickel	Polymethyl-pentene	Commercial	**27.79** 1.094	318451-2	**5221506-3**
AT&T 735A	O Crimp	Gold	Nickel	Polymethyl-pentene	Commercial	**29.46** 1.160	58174-1	**5221506-5**
302 BELDEN 88241 89269 Hi-Temp 62A Times PL62, BERK-TEK BTDC-59, BTDC-62	Hex Crimp	Gold	Nickel	Polymethyl-pentene	Commercial	**31.75** 1.250	58425-1	**5413591-1**
BELDEN 8281 9141, 9231	O Crimp	Gold	Nickel	Polymethyl-pentene	Commercial	**32.9** 1.295	58538-1	**5221506-2**

Bulkhead Jack, Crimp

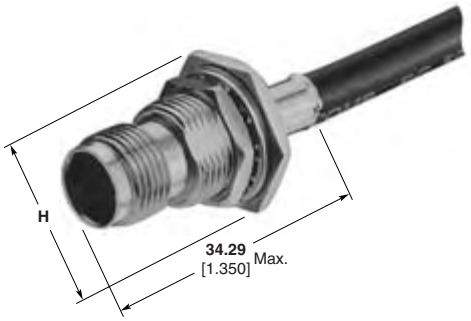

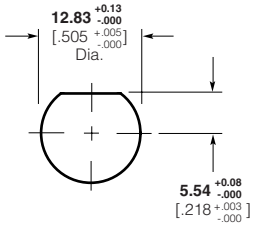

Maximum Panel Thickness **6.35** [.250]

Recommended Panel Cutout

RG/U Cable	Termination Type	Center Contact Plating	Body Plating	Dielectric	Style	Dim. H	Tooling	Part No.
210, 62, 62A, 62B, 59, 59A, 59B, BELDEN 9291, 9209, 9169, 89269	O Crimp	Gold	Nickel	Polymethyl-pentene	Commercial	11/16 across flats, **20.32** .800 max. across points	Use Hand Tool 354940-1 with Die Set 58536-1	**221509-1**

AT&T is a trademark of AT&T Corporation.
BELDEN is a trademark of Belden Wire and Cable Company.
BERK-TEK is a trademark of Nexans, Inc.

Note: Part Numbers are RoHS compliant except: ♦ Indicates non-RoHS compliant.

Catalog 1307191
Revised 3-07

www.tycoelectronics.com

Dimensions are in millimeters and inches unless otherwise specified. Values in brackets are standard equivalents.

Dimensions are shown for reference purposes only. Specifications subject to change.

USA: 1-800-522-6752
Canada: 1-905-470-4425
Mexico: 01-800-733-8926
C. America: 52-55-1106-0803

South America: 55-11-2103-6000
Hong Kong: 852-2735-1628
Japan: 81-44-844-8013
UK: 44-8706-080-208

TNC Connectors, 75 Ohm (Continued)

Right-Angle PC Board/ Panel Mount Jacks

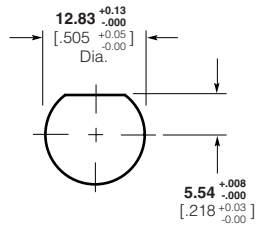

Maximum Panel Thickness **6.1** [.240]

Recommended Panel Cutout

Metal Body

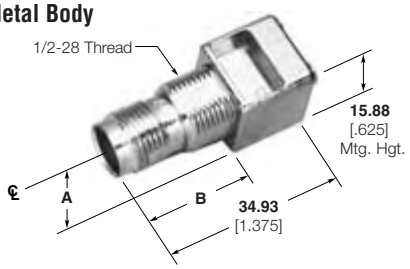

Body Material	Ω	Center Contact Plating	Dimensions		Part Numbers	
			A	B	Without Mounting Posts	With Mounting Posts
Metal	75	Gold	**8.26** .325	**20.83** .820	—	**5413506-1**

Bulkhead Jack-Jack Adapter



Center Contact Plating	Body Plating	Dielectric	Part No.
Gold	Nickel	Polymethylpentene	**414396-1**

Note: Part Numbers are RoHS compliant except: ♦ Indicates non-RoHS compliant.

Catalog 1307191
Revised 3-07

www.tycoelectronics.com

Dimensions are in millimeters and inches unless otherwise specified. Values in brackets are standard equivalents.

Dimensions are shown for reference purposes only. Specifications subject to change.

USA: 1-800-522-6752
Canada: 1-905-470-4425
Mexico: 01-800-733-8926
C. America: 52-55-1106-0803

South America: 55-11-2103-6000
Hong Kong: 852-2735-1628
Japan: 81-44-844-8013
UK: 44-8706-080-208

BNC Connectors (50 ohm/75 ohm)

Product Facts

- **Bayonet lock coupling for quick connect/disconnect**
- **Various connectors available in 50 and 75 ohm versions**
- **Fully intermateable with comparable BNC UG/U connectors**
- **Full range of Hex Crimp and O Crimp Products for common coaxial cables.**
- **Low VSWR**
- **Single crimp connectors offer one crimping operation for fast application**
- **Twist-on connectors require no special tooling for application to the cable**
- **Field serviceable (Category A) connectors qualified to MIL-C-39012**
- **Field replaceable (Category C) plugs with captivated center contact**
- **Field replaceable plugs can be terminated with industry standard tooling**
- **Tarnish resistant Nickel finish available**
- **Choice of different dielectrics**
- **Listed under the Component Program of Underwriters Laboratories Inc., File No. E81956**
- **PC Board soldered connectors are recognized under the Component Program of Underwriters Laboratories Inc., File No. E81956**
- **Certified by Canadian Standards Association File No. LR 7189**

Between Series Adapters

For BNC Between Series Adapters, see pages 251-260.



The Tyco Electronics BNC RF connector family with bayonet locking coupling provides highly reliable, quick connect/disconnect coaxial connections. Exclusive single and O crimp terminations allow positive insulation grip and require no soldering, providing terminations at a very low overall applied cost.

Available in both 50 and 75 ohm versions, these connectors feature numerous styles including cable plugs and jacks, adapters and printed circuit board connectors. In addition to a variety of crimp type terminations, connectors are furnished in field replaceable and twist-on styles. These connectors accept a wide range of coaxial cables and are intermateable with industry standard connectors designed to MIL-C-39012 specifications.

Tyco Electronics can also supply low cost alternatives with an extensive commercial type product line. A lower cost consumer series product offers the capability to supply center contacts in strip form and allow for automated center contact crimp technology. All connectors are designed around the mil-specifications, but utilize low-cost materials, offering comparable mechanical and electrical performance.

Related Product Data

Product Specifications —

108-1275 — BNC Ohm Terminators

108-12020 — BNC O Crimp Connectors

108-12044 — BNC Commercial Hex Crimp

108-12047 — BNC Commercial and Hex Crimp Connectors

108-12074 — BNC Solder Jacks

108-12075 — BNC Connectors (Category A)

108-12078 — BNC Commercial PCB Panel-Mount Jacks

108-12002 — BNC Commercial T Adapter

108-12095 — BNC Commercial 75 Ohm Connectors

108-12096 — BNC Commercial Feed-Thru and Bulkhead Adapters

108-12079 — BNC Commercial 50 Ohm Solder Jacks

108-12103 — BNC Commercial PCB Press Fit Jacks

Application Specifications —

114-12001 — BNC Commercial PCB Jack Press Fit

Performance Specifications — Page 45

Material Specifications — Page 46

Tooling — Pages 266-268

Military Category — All MIL type O crimp connectors are Category B Type (Tyco Electronics Crimp Tooling), unless otherwise noted.

Packaging — All MIL Type connectors are packaged individually, all O crimp connectors are bulk packaged and all Hex crimp connectors are individually packaged unless otherwise noted.

Catalog 1307191
Revised 3-07

www.tycoelectronics.com

Dimensions are in millimeters and inches unless otherwise specified. Values in brackets are standard equivalents.

Dimensions are shown for reference purposes only. Specifications subject to change.

USA: 1-800-522-6752
Canada: 1-905-470-4425
Mexico: 01-800-733-8926
C. America: 52-55-1106-0803

South America: 55-11-2103-6000
Hong Kong: 852-2735-1628
Japan: 81-44-844-8013
UK: 44-8706-080-208

BNC Connectors (50 ohm/75 ohm) Performance Specifications

Characteristics	Single Crimp (MIL Type)	Category B O Crimp (MIL Type)	Straight Solder Clamp	Right-Angle Solder Clamp	Commercial O Crimp & Hex Crimp 50 Ohms	Commercial O Crimp & Hex Crimp 75 Ohms	Commercial PC Board 50 & 75 Ohms	Commercial Solder 50 Ohm Jacks
Electrical								
Impedance, Nom. (Ohms)	50	50	50	50	50	75	50 & 75	50 & 75
Working Voltage (Volts RMS)	500	500	500	500	500	500	500	500
Contact Resistance (Milliohms)	Inner: 1.5 Outer: 0.3	Inner: 1.5 Outer: 0.2	Inner: 1.5 Outer: .20	Inner: 1.5 Outer: .20	Inner: 2.0 Outer: 1.0	Inner: 2.0 Outer: 2.0	Inner: 6/1.5 Outer: 3/0.2	Inner: 2.75 Outer: 1.0
Initial Insulation Resistance (Megohms)	5000	5000	5000	5000	5000	5000	5000	5000
Dielectric Withstanding Voltage (VAC)	1500	1500	1500	1500	1500	1500	1500	1500
Corona Level at 70,000 ft. (Volts, RMS)	375	375	375	375	375	375	—	375
RF Leakage, Max. (dB)	—	-55 at 2-3 GHz	-55 at 2-3 GHz	-55 at 2-3 GHz	-55 at 2-3 GHz	-55 at 1-2 GHz	—	—
RF Insertion Loss, Max. (dB)	—	0.2 at 3 GHz	0.2 at 3 GHz	0.3 at 3 GHz	0.2 at 3 GHz	0.15 at 2 GHz	—	—
Frequency Range (GHz)	0-2.5	0-4	0-4	0-4	0-4	0-2	0-4 and 0-2	0-4
VSWR in Frequency Range Max.	1.35	1.30	1.30	1.35	1.30	1.30	—	—
Mechanical								
Force to Engage (lbs. [N])/couple, (in-lbs. [N-M]) max.	13.3/11.12 [3/2.5]	13.3/11.12 [3/2.5]	13.3/.028 [3/2.5]	13.3/.028 [3/2.5]	26.7/26.69 [6/6.0]	26.7/26.69 [6/6.0]	—	—
Coupling Nut Retention, Min. N [lbs.]	444.8 [100]	444.8 [100]	444.8 [100]	444.8 [100]	266.9 [60]	266.9 [60]	—	—
Cable Retention, N [lbs.]	266.9 [60] (RG58C/U)	266.9 [60] (RG58C/U)	177.9 [40] (RG58C/U)	177.9 [40] (RG58C/U)	266.9 [60] (RG58C/U)	266.9 [60] (RG58C/U)	266.9 [60] (PCB Ret)	—
Durability (Cycles)	500	500	500	500	500	500	500	500
Jam Nut Mounting Torque, Max. [N•m] (in. lbs.)	25 [2.8]	25 [2.8]	25 [2.8]	—	25 [2.8]	25 [2.8]	25[3]/12[4] [2.8/1.4]	25 [2.8]
Environmental								
Temperature Range, Operating (C°)	-65 to +85	-65 to +165[1] -55 to +85[2]	-65 to +165	-65 to +165	-55 to +85	-55 to +85	-55 to +85	-65 to +165
Vibration	MIL-STD-202 Method 204 Cond. B	MIL-STD-202 Method 204 Cond. B	MIL-STD-202 Method 204 Cond. B	MIL-STD-202 Method 204 Cond. B	MIL-STD-1344 Method 2005 Cond. III	MIL-STD-202 Method 204 Cond. B	MIL-STD-202 Method 201A	MIL-STD-202 Method 204 Cond. B
Physical Shock	MIL-STD-202 Method 213 Cond. G, 50 G's	MIL-STD-202 Method 213 Cond. G, 50 G's	MIL-STD-202 Method 213 Cond. G	MIL-STD-202 Method 213 Cond. G	MIL-STD-1344 Method 2004 Cond. G, 100 G's	MIL-STD-202 Method 213 Cond. I, 100 G's	MIL-STD-202 Method 213 Cond. I or A, 50 G's	MIL-STD-202 Method 213 Cond. I, 100 G's
Thermal Shock	MIL-STD-202 Method 107	MIL-STD-202 Method 107	MIL-STD-202 Method 107	MIL-STD-202 Method 107	MIL-STD-1344 Method 1003 Cond. A	MIL-STD-202 Method 107	MIL-STD-202 Method 107	MIL-STD-202 Method 107
Moisture Resistance	MIL-STD-202 Method 106	MIL-STD-202 Method 106	MIL-STD-202 Method 106	MIL-STD-202 Method 106	MIL-STD-1344 Method 1002 Type II	MIL-STD-202 Method 106	MIL-STD-202 Method 106	MIL-STD-202 Method 106
Salt Spray	MIL-STD-202 Method 101 Cond. B	MIL-STD-202 Method 101 Cond. B	MIL-STD-202 Method 101 Cond. B	MIL-STD-202 Method 101 Cond. B	MIL-STD-1344 Method 1001 Cond. B	MIL-STD-202 Method 101 Cond. B	MIL-STD-202 Method 101 Cond. B	MIL-STD-202 Method 101 Cond. B
Product Specification	108-12002	108-12020	—	—	108-12044 108-12047	108-12095	108-12078	108-12079

[1]Assembled to cable with polytetrafluorethylene dielectric.
[2]Assembled to cable with polyethylene dielectric.
[3]For Metal Threads
[4]For Polyester Threads

Catalog 1307191
Revised 3-07

www.tycoelectronics.com

Dimensions are in millimeters and inches unless otherwise specified. Values in brackets are standard equivalents.

Dimensions are shown for reference purposes only. Specifications subject to change.

USA: 1-800-522-6752
Canada: 1-905-470-4425
Mexico: 01-800-733-8926
C. America: 52-55-1106-0803

South America: 55-11-2103-6000
Hong Kong: 852-2735-1628
Japan: 81-44-844-8013
UK: 44-8706-080-208

BNC Connectors (50 ohm/75 ohm) Performance Specifications (Continued)

Connector Component	Single Crimp (MIL Type)	Category B & C O Crimp (MIL Type)	Straight Solder Clamp	Right-Angle Solder Clamp	Commercial O Crimp Hex Crimp & Terminators	Commercial PCB Solder	Commercial PCB Press Fit	Commercial Solder Ohm Jacks	Adapters
Connector Material									
Collar	Brass QQ-B-626	Brass QQ-B-626	Brass	Brass	Brass QQ-B-626 Zinc QQ-Z-363	—	—	—	Brass QQ-B-626
Outer Contact (Plug)	Brass QQ-B-626 Beryl. Copper QQ-C-530	Phos. Bronze QQ-B-750	Brass	Brass	Brass MIL-C-21768	—	—	—	Brass QQ-B-626 Beryl. Copper QQ-C-530
Shell (Jack)	Brass QQ-B-626	Brass QQ-B-626	Brass	—	Zinc QQ-Z-363	Zinc QQ-Z-363	Zinc Zinc QQ-Z-363	QQ-Z-363 Brass QQ-B-626	Brass QQ-B-626
Dielectric	PTFE MIL-P-19468 Polypropylene Gen. Purpose	PTFE MIL-P-19468	PTFE	PTFE	Polyethylene Polypropylene Polymethylpentene Gen. Purpose	Polymethylpentene Gen. Purpose[1]	PTFE MIL-P-19468	PTFE MIL-P-19468 Polyester PBT MIL-P-24519	PTFE MIL-P-19468 Polypropylene, Gen. Purpose
Center Contact (Plug)	Brass QQ-B-626	Brass QQ-B-626	Brass	Brass	Brass QQ-B-626	—	—	—	Brass QQ-B-626 Beryl. Copper QQ-C-530
Center Contact (Jack)	Beryl. Copper ASTM-B-643 QQ-C-530	Beryl. Copper ASTM-B-643 QQ-C-530	Beryl. Copper	Beryl. Copper	Beryl. Copper QQ-C-530	Phos. Bronze QQ-B-750	Beryl. Copper QQ-C-530	Phos. Bronze QQ-B-570 Beryl. Copper QQ-C-530	Phos. Bronze QQ-B-570 Beryl. Copper QQ-C-530
Gasket	Silicon Rubber QQ-R-765	Silicon Rubber QQ-R-765	Silicon Rubber	Silicon Rubber	Silicon Rubber QQ-R-765	—	—	—	Silicon Rubber QQ-R-765
Ferrule	Copper QQ-C-576	Copper QQ-C-576	—	—	Copper QQ-C-576	—	—	—	—
Connector Primary Finishes[2]									
Collar	Silver QQ-S-365 Bright Nickel QQ-N-290	Silver QQ-S-365 Bright Nickel QQ-N-290	Silver/ Bright Nickel	Silver/ Bright Nickel	Bright Nickel QQ-N-290	—	—	—	Silver QQ-S-365 Bright Nickel QQ-N-290
Outer Contacts (Plug & Jack)	QQ-S-365 Gold	Silver QQ-S-365 Bright Nickel QQ-N-290	Silver/ Bright Nickel	Silver/ Bright Nickel	Bright or Matte Nickel QQ-N-290	Bright Nickel QQ-N-290	Bright Nickel QQ-N-290	Bright Nickel QQ-N-290	Silver QQ-S-365 Bright Nickel QQ-N-290
Center Contacts (Plug & Jack)	MIL-G-45204 Silver	Gold MIL-G-45204	Gold	Gold	Tin Lead ASTM-B-545 Silver, QQ-S-365 Gold, MIL-G-45204	Tin Lead ASTM-B-545 Silver, QQ-S-365 Gold, MIL-G-45204	Gold MIL-B-45204	Tin Lead ASTM-B-545 Silver, QQ-S-365 Gold, MIL-G-45204	Silver QQ-S-365 Gold MIL-G-45204
Ferrule[3]	QQ-S-365	Silver QQ-S-365 Tin Lead ASTM-B-545	—	—	Tin Lead ASTM-B-545	—	—	—	—

[1]Several pc board connectors have an outer polyester PBT insulator per MIL-P-24519.
[2]If more than one finish is listed, refer to individual catalog page(s) or customer drawings for exact specification.
[3]Ferrules with tin-lead finish are used with nickel plated outer contacts.

Catalog 1307191
Revised 3-07

www.tycoelectronics.com

Dimensions are in millimeters and inches unless otherwise specified. Values in brackets are standard equivalents.

Dimensions are shown for reference purposes only. Specifications subject to change.

USA: 1-800-522-6752
Canada: 1-905-470-4425
Mexico: 01-800-733-8926
C. America: 52-55-1106-0803

South America: 55-11-2103-6000
Hong Kong: 852-2735-1628
Japan: 81-44-844-8013
UK: 44-8706-080-208

BNC Connectors, 50 Ohm

Plugs, Crimp

Single Crimp

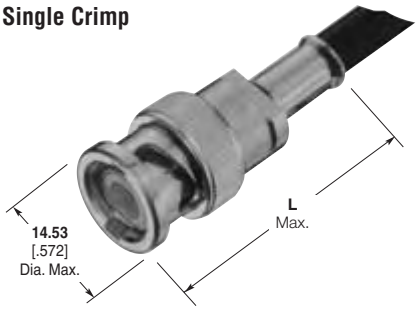

Hex and O Crimp

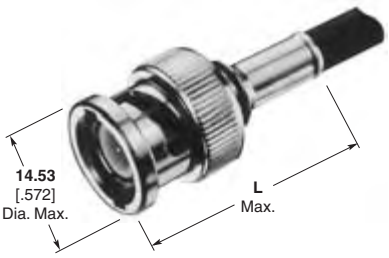

RG/U Cable	Termination Type	Body Plating	Dielectric	Style	Dim. L	CERTI-CRIMP Hand Tool with Integral Die	Interchangeable Dies for PRO-CRIMPER Hand Tool 354940-1 or PRO-CRIMPER Adapter 679304-1	Interchangeable Dies for Hand Tool 69710-1 & 626 Pneu. Head 318161-1	Part No.
178, 178A, 178B, 196, 196A	Single Crimp	Silver	PTFE	MIL Type	**33.33** 1.312	69245-4	—	69471	**5330876**
174, 188, 188A, 316	Hex Crimp	Nickel	Polyethylene	Commercial	**33.53** 1.320	—	58436-3	—	**2-5221128-1**
	O Crimp	Nickel	Polyethylene	Commercial	**27.69** 1.090	220009-5	318450-2	220217-3	**1-5227079-6**
	O Crimp	Nickel	PTFE	MIL Type	**30.18** 1.188	—	1424050-1	220026-1	**5225395-7**
	Single Crimp	Silver	PTFE	MIL Type	**33.33** 1.312	69245-2	—	69422	**2-5330061-1**
179, 179A, 179B, 161, 187, 187A, BELDEN 9221	Hex Crimp	Nickel	Polyethylene	Commercial	**33.53** 1.320	—	58436-3	—	**2-5221128-3**
	O Crimp	Nickel	Polyethylene	Commercial	**27.69** 1.090	—	1424050-1	220217-3	**2-5227079-2**
	O Crimp	Nickel	PTFE	MIL Type	**30.18** 1.188	—	—	220026-1	**5225395-8**
	Single Crimp	Silver	PTFE	MIL Type	**33.33** 1.312	—	91910-1	69408	**2-5329446-1**
RD 316, 188, Double Braid	O Crimp	Nickel	Polyethylene	Commercial	**27.69** 1.090	69477-4	58539-1	—	**8-5227079-2**
BELDEN 8219	Hex Crimp	Nickel	Polyethylene	Commercial	**33.53** 1.320	—	58436-1[2]	—	**2-5221128-7**
	O Crimp	Nickel	Polyethylene	Commercial	**27.69** 1.090	220187-1	58435-1[1]	220217-1	**6-5227079-7**[3]
BELDEN 9907, 89907 COMM/ SCOPE 2104	O Crimp	Nickel	Polyethylene	Commercial	**27.69** 1.090	220187-1	318452-2	220217-1	**6-5227079-8**[4]
BELDEN 8218	O Crimp	Nickel	Polyethylene	Commercial	**27.69** 1.090	69477-4	58539-1	58376-1	**1-5227079-9**
	O Crimp	Nickel	PTFE	MIL Type	**30.18** 1.188	—	91904-1	69669-2	**1-5225395-0**

[1]Order Tyco Electronics PRO-CRIMPER Coaxial "O" Crimp Hand Tool assembly 58433-1, which includes dies 58435-1.
[2]Order Tyco Electronics PRO-CRIMPER Coaxial Hex Crimp Hand Tool assembly 58433-2, which includes dies 58436-1.
[3]For use with BELDEN 9907 cable, COMM/SCOPE 3104 cable, and BELDEN 8219 cable only.
[4]For use with BELDEN 89907 cable, and COMM/SCOPE 2104 cable only.

BELDEN is a trademark of Belden Wire and Cable Company.
COMM/SCOPE is a trademark of Commscope, Inc.

Note: Part Numbers are RoHS compliant except: ♦ Indicates non-RoHS compliant.

Catalog 1307191
Revised 3-07

www.tycoelectronics.com

Dimensions are in millimeters and inches unless otherwise specified. Values in brackets are standard equivalents.

Dimensions are shown for reference purposes only. Specifications subject to change.

USA: 1-800-522-6752
Canada: 1-905-470-4425
Mexico: 01-800-733-8926
C. America: 52-55-1106-0803

South America: 55-11-2103-6000
Hong Kong: 852-2735-1628
Japan: 81-44-844-8013
UK: 44-8706-080-208

BNC Connectors, 50 Ohm (Continued)

Plugs, Crimp (Continued)

Single Crimp

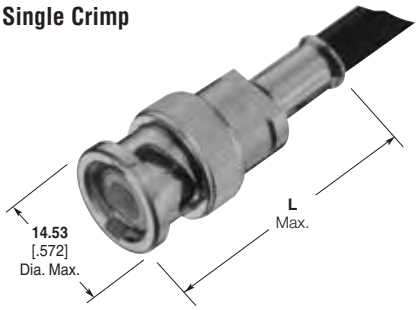

Hex and O Crimp

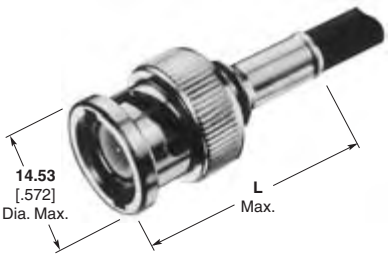

RG/U Cable	Termination Type	Body Plating	Dielectric	Style	Dim. L	CERTI-CRIMP Hand Tool with Integral Die	Interchangeable Dies for PRO-CRIMPER Hand Tool 354940-1 or PRO-CRIMPER Adapter 679304-1	Interchangeable Dies for Hand Tool 69710-1 & 626 Pneu. Head 318161-1	Part No.
58, 58A, 58B, 58C	Hex Crimp	Nickel	Polyethylene	Commercial	**33.53** 1.320	—	58436-1[2]	—	**5221128-1**[3]
	O Crimp	Nickel	Polyethylene	Commercial	**27.69** 1.090	220187-1	58435-1[1]	220217-1	**5227079-5**
	O Crimp	Nickel	PTFE	MIL Type	**33.74** 1.328	69478-1	220189-3	69727	**5225395-1**
	Single Crimp	Silver	PTFE	MIL Type	**33.33** 1.312	—	91904-4	69223-1	**2-5329444-1**
BELDEN 88240, BERK-TEK BTDC-58, COMM/ SCOPE 2135	Hex Crimp	Nickel	Polyethylene	Commercial	**33.53** 1.320	—	58436-1[2]	—	**1-5221128-0**
	O Crimp	Nickel	Polyethylene	Commercial	**33.33** 1.312	220187-1	58435-1[1]	220217-1	**4-5227079-3**
	O Crimp	Nickel	PTFE	MIL Type	**33.33** 1.312	69478-1	220189-3	69727	**4-5225395-2**
223, 55, 55A, 55B	O Crimp	Nickel	Polyethylene	Commercial	**27.69** 1.280	220187-1	58435-1[1]	220217-1	**5227079-6**
	O Crimp	Nickel	PTFE	MIL Type	**43.64** 1.718	69478-1	220189-3	69727	**5225395-3**
	Single Crimp	Silver	PTFE	MIL Type	**33.33** 1.312	—	91904-3	69424	**2-5329444-2**
142, 142A, 142B, 400	O Crimp	Nickel	Polyethylene	Commercial	**27.69** 1.090	220187-1	58435-1[1]	220217-1	**6-5227079-1**
	O Crimp	Nickel	PTFE	MIL Type	**30.18** 1.188	69478-1	220189-3	69727	**5225395-6**
	Single Crimp	Silver	PTFE	MIL Type	**33.33** 1.312	69331-1	—	69429-1	**2-5330358-2**

Consult Tyco Electronics for recommended crimp tooling.
[1]Order Tyco Electronics PRO-CRIMPER Coaxial "O" Crimp Hand Tool assembly 58433-1, which includes dies 58435-1.
[2]Order Tyco Electronics PRO-CRIMPER Coaxial Hex Crimp Hand Tool assembly 58433-2, which includes dies 58436-1.
[3]Bulk packaged.

BELDEN is a trademark of Belden Wire and Cable Company.
BERK-TEK is a trademark of Nexans, Inc.
COMM/SCOPE is a trademark of Commscope, Inc.

Note: Part Numbers are RoHS compliant except: ♦ Indicates non-RoHS compliant.

BNC Connectors, 50 Ohm (Continued)

Plugs, Crimp (Continued)

Single Crimp

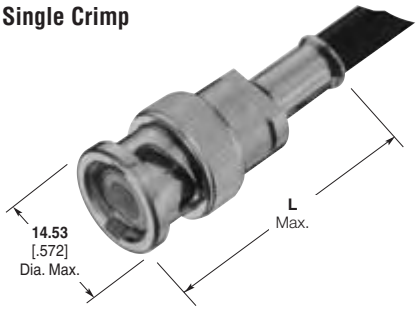

Hex and O Crimp

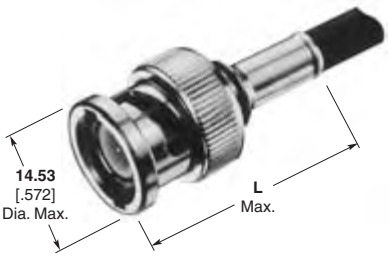

RG/U Cable	Termination Type	Body Plating	Dielectric	Style	Dim. L	CERTI-CRIMP Hand Tool with Integral Die	Interchangeable Dies for PRO-CRIMPER Hand Tool 354940-1 or PRO-CRIMPER Adapter 679304-1	Interchangeable Dies for Hand Tool 69710-1 & 626 Pneu. Head 318161-1	Part No.
124, 140, 210, 62, 62A, 62B, 59, 59A, 59B, BELDEN 9291, 9209, 9269	Hex Crimp	Nickel	Polyethylene	Commercial	**33.53** 1.320	—	58436-1[2]	—	**1-5221128-1**
	O Crimp	Nickel	Polyethylene	Commercial	**27.69** 1.090	220187-2	58435-1[1]	220217-2	**5227079-7**
	O Crimp	Nickel	Polyethylene	Commercial	**27.69** 1.090	220187-2	58435-1[1]	220217-2	**1-5227079-1**
	O Crimp	Nickel	PTFE	MIL Type	**30.18** 1.188	—	58537-1	—	**5225395-2**
	Single Crimp	Silver	PTFE	MIL Type	**33.33** 1.312	69141-1	—	—	**2-5329445-1**
302, BELDEN 88241, 89269, Hi-Temp 62A, Times PL62, BERK-TEK, BTDC-59, BTDC-62	Hex Crimp	Nickel	Polyethylene	Commercial	**33.53** 1.320	—	58436-1[2]	—	**1-5221128-1**
	O Crimp	Nickel	PTFE	MIL Type	**34.14** 1.344	69477-1	58537-1	69669-1	**4-5225395-1**
Hi-Temp 59, Times PL59, PLF59 (20 AWG C.C.)	O Crimp	Nickel	Polyethylene	Commercial	**33.33** 1.312	—	58537-1	—	**5-5227079-3**
BELDEN 9104, 9240, 9112, 9167, 9259, 9266, Times FM-59	Hex Crimp	Nickel	Polyethylene	Commercial	**33.53** 1.320	—	58436-1[2]	—	**1-5221128-7**
	O Crimp	Nickel	PTFE	MIL Type	**30.94** 1.218	—	58537-1	69669-1	**2-5225395-0**
BELDEN 8281, 9141, 9231, Western Electric 724, 728, 3049	Single Crimp	Silver	Polypropylene	MIL Type	**41.50** 1.634	69652	—	220000	**5330878**
8, 8A, 213	O Crimp	Silver	PTFE	MIL Type	**27.31** 1.075	220015-1	—	—	**5225886-1**
11, 11A	O Crimp	Silver	PTFE	MIL Type	**47.63** 1.875	220015-1	—	—	**5225886-4**
BELDEN 9914, Times FM-8	O Crimp	Silver	PTFE	MIL Type	**47.63** 1.875	220015-1	—	—	**5225886-7**
Alpha 9847, BELDEN 8213, 9292	O Crimp	Silver	PTFE	MIL Type	**47.63** 1.875	220015-1	—	—	**225886-5 ♦**
9, 9A, 9B, 214	O Crimp	Silver	PTFE	MIL Type	**52.38** 2.062	220015-1	—	—	**5225886-1**

[1]Order Tyco Electronics PRO-CRIMPER Coaxial "O" Crimp Hand Tool assembly 58433-1, which includes dies 58435-1.
[2]Order Tyco Electronics PRO-CRIMPER Coaxial Hex Crimp Hand Tool assembly 58433-2, which includes dies 58436-1.
Tyco Electronics PRO-CRIMPER II Hand Tool Frame without dies Part No. 354940-1

BELDEN is a trademark of Belden Wire and Cable Company.
BERK-TEK is a trademark of Nexans, Inc.

Note: Part Numbers are RoHS compliant except: ♦ Indicates non-RoHS compliant.

Catalog 1307191
Revised 3-07

www.tycoelectronics.com

Dimensions are in millimeters and inches unless otherwise specified. Values in brackets are standard equivalents.

Dimensions are shown for reference purposes only. Specifications subject to change.

USA: 1-800-522-6752
Canada: 1-905-470-4425
Mexico: 01-800-733-8926
C. America: 52-55-1106-0803

South America: 55-11-2103-6000
Hong Kong: 852-2735-1628
Japan: 81-44-844-8013
UK: 44-8706-080-208

BNC Connectors, 50 Ohm (Continued)

Plugs, Twist-On

Related Product Data

Twist-On plugs must be used with cable that has a solid conductor. These plugs are not recommended for applications where the cable frequently moves or flexes.

Mating Twist-On Jack — Page 52

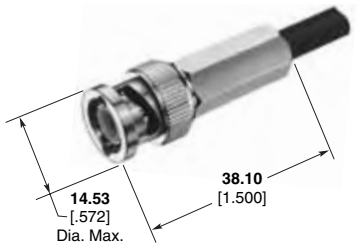

RG/U Cable	Contact Plating	Body Plating	Dielectric	Style	Part No.
59, 59A, 59B	Gold	Nickel	Polymethyl-pentene	Commercial	**5414265-3**

Right-Angle Plugs, Crimp

Single Crimp

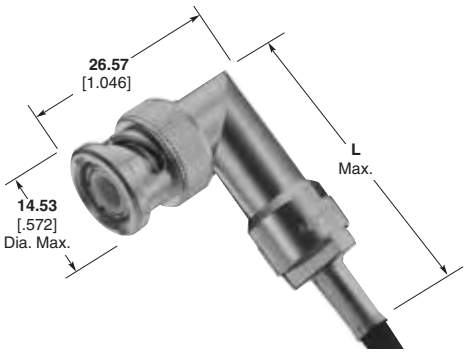

Hex and O Crimp

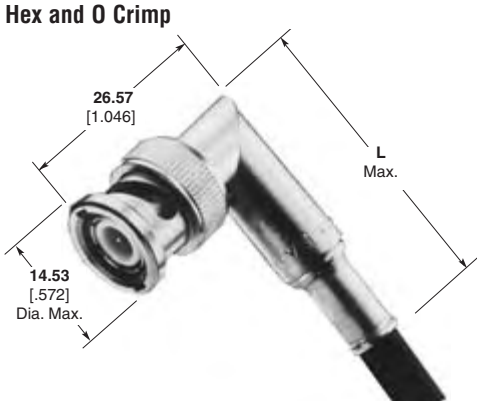

RG/U Cable	Termination Type	Center Contact Plating	Body Plating	Dielectric	Style	Dim. L	CERTI-CRIMP Hand Tool with Integral Die	Interchangeable Dies for PRO-CRIMPER Hand Tool 354940-1 or PRO-CRIMPER Adapter 679304-1	Interchangeable Dies for Hand Tool 69710-1 & 626 Pneu. Head 318161-1	Part No.
174, 188, 188A, 316	Hex Crimp	Gold	Nickel	Polymethyl-pentene	Commercial	**39.45** 1.553	—	58436-3	—	**5413959-3**
	Single Crimp	Gold	Silver	PTFE	MIL Type	**44.45** 1.750	—	91910-1	69422	**5331178**
179, 179A, 179B, 161, 187, 187A, BELDEN 9221	Hex Crimp	Gold	Nickel	Polymethyl-pentene	Commercial	**39.45** 1.553	—	58436-3	—	**5413959-4**
180, 180A, 180B, 195, 195A	Hex Crimp	Gold	Nickel	Polymethyl-pentene	Commercial	**39.45** 1.553	—	58436-3	—	**5413959-5**
BELDEN 9907, 89907, 8219, COMM/SCOPE 2104, 3104	Hex Crimp	Gold	Nickel	Polymethyl-pentene	Commercial	**39.45** 1.553	—	58436-1	—	**5413959-6**
58, 58A, 58B, 58C	Hex Crimp	Gold	Nickel	Polymethyl-pentene	Commercial	**39.45** 1.553	—	58436-1	—	**5413959-1**
	O Crimp	Gold	Nickel	PTFE	MIL Type	**37.29** 1.468	69478-1	220189-3	69727-1	**5225974-1**
	Single Crimp	Gold	Silver	PTFE	MIL Type	**44.45** 1.750	—	91904-1	69223-1	**5331175**
55, 55A, 55B, 223	O Crimp	Gold	Nickel	PTFE	MIL Type	**37.29** 1.468	69478-1	220189-3	69727-1	**5225974-2**
	Single Crimp	Gold	Silver	PTFE	MIL Type	**44.45** 1.750	—	91904-3	69429-1	**5331182**
142, 142A, 142B, 400	Single Crimp	Gold	Silver	PTFE	MIL Type	**44.45** 1.750	69331-1	—	69429-1	**5331182**
124, 140, 210, 62, 62A, 62B, 59, 59A, 59B, BELDEN 9291, 9209, 9269	O Crimp	Gold	Nickel	PTFE	MIL Type	**37.29** 1.468	—	58537-1	69669-1	**5225974-5**

BELDEN is a trademark of Belden Wire and Cable Company.
COMM/SCOPE is a trademark of Commscope, Inc.

Note: Part Numbers are RoHS compliant except: ♦ Indicates non-RoHS compliant.

Catalog 1307191
Revised 3-07

www.tycoelectronics.com

Dimensions are in millimeters and inches unless otherwise specified. Values in brackets are standard equivalents.

Dimensions are shown for reference purposes only. Specifications subject to change.

USA: 1-800-522-6752
Canada: 1-905-470-4425
Mexico: 01-800-733-8926
C. America: 52-55-1106-0803

South America: 55-11-2103-6000
Hong Kong: 852-2735-1628
Japan: 81-44-844-8013
UK: 44-8706-080-208

BNC Connectors, 50 Ohm (Continued)

Jacks, Crimp

Single Crimp

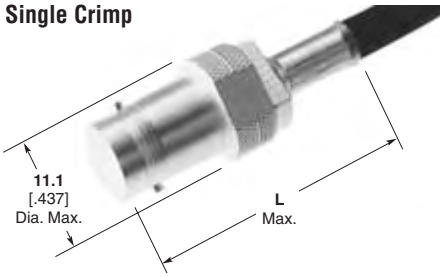

Hex and O Crimp

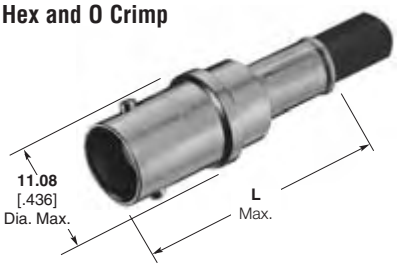

RG/U Cable	Termination Type	Center Contact Plating	Body Plating	Dielectric	Style	Dim. L	CERTI-CRIMP Hand Tool with Integral Die	Interchangeable Dies for PRO-CRIMPER Hand Tool 354940-1 or PRO-CRIMPER Adapter 679304-1	Interchangeable Dies for Hand Tool 69710-1 & 626 Pneu. Head 318161-1	Part No.
174, 188, 188A, 316	Hex Crimp	Gold	Nickel	Polymethyl-pentene	Commercial	**33.02** 1.300	—	58436-3	—	**5413779-3**
	O Crimp	Gold	Nickel	Polypro-pylene	Commercial	**30.48** 1.200	—	1424050-1	220217-3	**5228979-7**
	O Crimp	Gold	Nickel	PTFE	MIL Type	**30.48** 1.200	—	1424050-1	220026-1	**5225396-7**
	Single Crimp	Gold	Silver	PTFE	MIL Type	**33.33** 1.312	—	—	69422	**2-5330062-1**
179, 179A, 179B, 161, 187, 187A, BELDEN 9221	Hex Crimp	Gold	Nickel	Polymethyl-pentene	Commercial	**33.02** 1.300	—	58436-3	—	**2-5413779-4**
58, 58A, 58B, 58C	O Crimp	Gold	Nickel	Polypro-pylene	Commercial	**30.48** 1.200	220187-1	58435-1[1]	220217-1	**5228979-5**
	O Crimp	Gold	Nickel	PTFE	MIL Type	**30.48** 1.200	—	91901-1	69727	**5225396-1**
223, 55, 55A, 55B	Single Crimp	Gold	Silver	PTFE	MIL Type	**33.33** 1.312	69140-2	91904-3	69424	**2-5329452-2**
124, 140, 210, 62, 62A, 62B, 59, 59A, 59B, BELDEN 9291, 9209, 9269	O Crimp	Gold	Nickel	Polypro-pylene	Commercial	**30.48** 1.200	220187-2	58435-1[1]	220217-2	**5228979-6**
	O Crimp	Gold	Nickel	PTFE	MIL Type	**30.48** 1.200	—	58537-1	69669-1	**5225396-2**

[1]Order Tyco Electronics PRO-CRIMPER Coaxial "O" Crimp Hand Tool assembly 58433-1, which includes dies 58435-1.

BELDEN is a trademark of Belden Wire and Cable Company.

Note: Part Numbers are RoHS compliant except: ♦ Indicates non-RoHS compliant.

Catalog 1307191
Revised 3-07

www.tycoelectronics.com

Dimensions are in millimeters and inches unless otherwise specified. Values in brackets are standard equivalents.

Dimensions are shown for reference purposes only. Specifications subject to change.

USA: 1-800-522-6752
Canada: 1-905-470-4425
Mexico: 01-800-733-8926
C. America: 52-55-1106-0803

South America: 55-11-2103-6000
Hong Kong: 852-2735-1628
Japan: 81-44-844-8013
UK: 44-8706-080-208

BNC Connectors, 50 Ohm (Continued)

Jacks, Twist-On

Related Product Data

Twist-on jacks must be used with cable that has a solid conductor. These jacks are not recommended for applications where the cable frequently moves or flexes.

Mating Twist-On Plug — Page 50

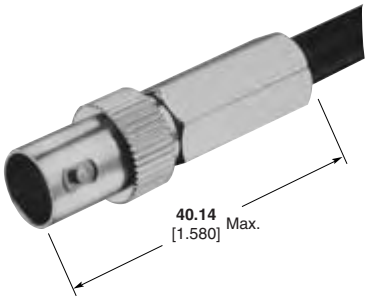

RG/U Cable	Center Contact	Body Plating	Dielectric	Style	Part No.
59, 59A, 59B	Gold	Nickel	Acetal	Commercial	**222428-1**

Panel Jacks, Crimp

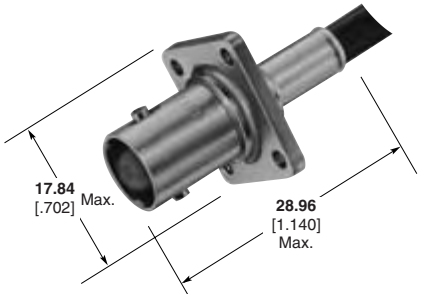

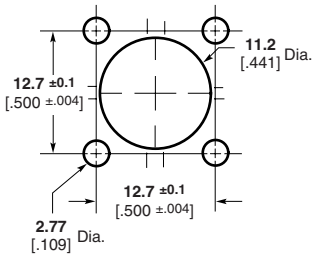

Recommended Panel Cutout

RG/U Cable	Termination Type	Center Contact Plating	Body Plating	Dielectric	Style	CERTI-CRIMP Hand Tool with Integral Die	Interchangeable Dies for PRO-CRIMPER Hand Tool 354940-1 or PRO-CRIMPER Adapter 679304-1	Interchangeable Dies for Hand Tool 69710-1 & 626 Pneu. Head 318161-1	Part No.
174, 188, 188A, 316	O Crimp	Gold	Nickel	PTFE	MIL Type	—	1424050-1	220026-1	**5225397-7**
58, 58A, 58B, 58C	O Crimp	Gold	Nickel	PTFE	MIL Type	69478-1	91901-1	69727	**5225397-1**
124, 140, 210, 62, 62A, 62B, 59, 59A, 59B, BELDEN 9291, 9209, 9269, 89269	O Crimp	Gold	Nickel	PTFE	MIL Type	69477-1	58537-1	69669-1	**5225397-2**

BELDEN is a trademark of Belden Wire and Cable Company.

Note: Part Numbers are RoHS compliant except: ♦ Indicates non-RoHS compliant.

Catalog 1307191
Revised 3-07

www.tycoelectronics.com

Dimensions are in millimeters and inches unless otherwise specified. Values in brackets are standard equivalents.

Dimensions are shown for reference purposes only. Specifications subject to change.

USA: 1-800-522-6752
Canada: 1-905-470-4425
Mexico: 01-800-733-8926
C. America: 52-55-1106-0803

South America: 55-11-2103-6000
Hong Kong: 852-2735-1628
Japan: 81-44-844-8013
UK: 44-8706-080-208

BNC Connectors, 50 Ohm (Continued)

Bulkhead Jacks, Crimp

Note: Panel Insulating Bushings — Page 54

Single Crimp

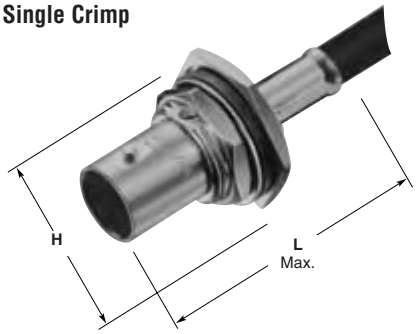

Hex and O Crimp

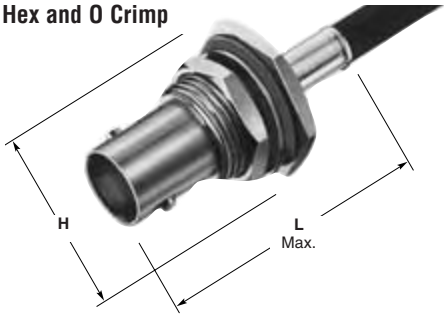

Recommended Panel Cutouts
Maximum Panel Thickness **3.18** [.125]

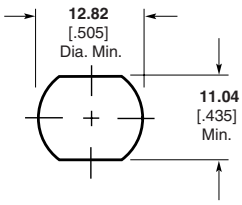

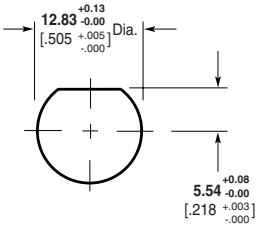

H = 11/16" across flats, **20.32** [.800] Max. across points

RG/U Cable	Termination Type	Center Contact Plating	Body Plating	Dielectric	Style	Dim. L	CERTI-CRIMP Hand Tool with Integral Die	Interchangeable Dies for PRO-CRIMPER Hand Tool 354940-1 or PRO-CRIMPER Adapter 679304-1	Interchangeable Dies for Hand Tool 69710-1 & 626 Pneu. Head 318161-1	Part No.
174, 188, 188A, 316	Hex Crimp	Gold	Nickel	Polymethyl-pentene	Commercial	**36.83** 1.450	—	58436-3	—	**5413771-3**
	O Crimp	Gold	Nickel	Polypro-pylene	Commercial	**34.93** 1.375	—	—	220217-3	**5228980-7**
	O Crimp	Gold	Nickel	PTFE	MIL Type	**35.71** 1.406	—	—	220026-1	**5225398-7**
	Single Crimp	Gold	Silver	PTFE	MIL Type	**32.13** 1.265	—	—	69422	**2-5330063-1**
179, 179A, 179B, 161, 187, 187A, BELDEN 9221	O Crimp	Gold	Nickel	PTFE	MIL Type	**35.71** 1.406	—	1424050-1	220026-1	**5225398-8**
	Single Crimp	Gold	Silver	PTFE	MIL Type	**32.13** 1.265	—	91910-1	69408	**2-5329458-1**
Times RD316	O Crimp	Gold	Nickel	PTFE	MIL Type	**35.71** 1.406	—	91904-1	69669-2	**1-5225398-5**

BELDEN is a trademark of Belden Wire and Cable Company.

Note: Part Numbers are RoHS compliant except: ♦ Indicates non-RoHS compliant.

Catalog 1307191
Revised 3-07

www.tycoelectronics.com

Dimensions are in millimeters and inches unless otherwise specified. Values in brackets are standard equivalents.

Dimensions are shown for reference purposes only. Specifications subject to change.

USA: 1-800-522-6752
Canada: 1-905-470-4425
Mexico: 01-800-733-8926
C. America: 52-55-1106-0803

South America: 55-11-2103-6000
Hong Kong: 852-2735-1628
Japan: 81-44-844-8013
UK: 44-8706-080-208

BNC Connectors, 50 Ohm (Continued)

Bulkhead Jacks, Crimp (Continued)

Note: Panel Insulating Bushings — at the bottom of this page

Single Crimp

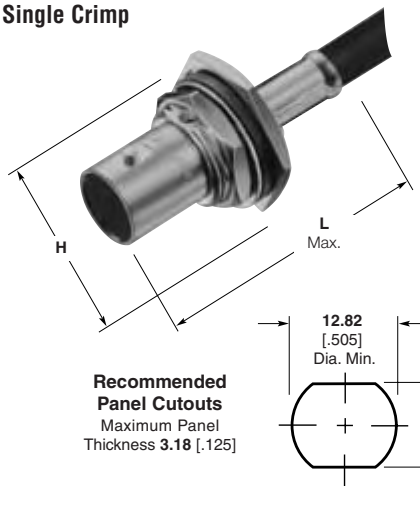

Hex and O Crimp

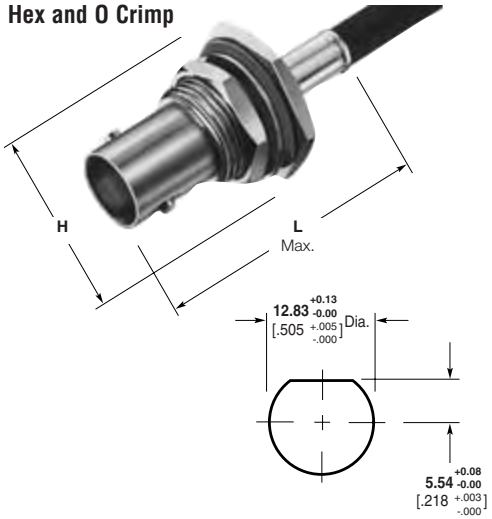

H = 11/16" across flats, **20.32** [.800] Max. across points

RG/U Cable	Termination Type	Center Contact Plating	Body Plating	Dielectric	Style	Dim. L	CERTI-CRIMP Hand Tool with Integral Die	Interchangeable Dies for PRO-CRIMPER Hand Tool 354940-1 or PRO-CRIMPER Adapter 679304-1	Interchangeable Dies for Hand Tool 69710-1 & 626 Pneu. Head 318161-1	Part No.
58, 58A, 58B, 58C, BELDEN 88240, BERK-TEK BTDC-58, COMM/SCOPE 2135	Hex Crimp	Gold	Nickel	Polymethyl-pentene	Commercial	**36.83** 1.450	—	58436-1	—	**5413771-1**
58, 58A, 58B, 58C	O Crimp	Gold	Nickel	Polypro-pylene	Commercial	**34.93** 1.375	220187-1	58435-1[1]	220217-1	**5228980-5**
	O Crimp	Gold	Nickel	PTFE	MIL Type	**41.28** 1.625	—	91901-1	69727	**5225398-1**
	Single Crimp	Gold	Silver	PTFE	MIL Type	**32.13** 1.265	—	91904-4	69223-1	**2-5329456-1**
223, 55, 55A, 55B	O Crimp	Gold	Nickel	PTFE	MIL Type	**35.71** 1.406	—	91901-1	69727	**5225398-3**
142, 142A, 142B, 400	O Crimp	Gold	Nickel	PTFE	MIL Type	**35.71** 1.406	—	91901-1	69727	**5225398-6**
124, 140, 210, 62, 62A, 62B, 59, 59A, 59B, BELDEN 9291, 9209, 9269	O Crimp	Gold	Nickel	Polypro-pylene	Commercial	**34.93** 1.375	220187-2	58435-1[1]	220217-2	**5228980-6**

[1]Order Tyco Electronics PRO-CRIMPER Coaxial "O" Crimp Hand Tool assembly 58433-1, which includes dies 58435-1.

Panel Insulating Bushings for Bulkhead Jacks

Material — Nylon

Note: Can not be used with single crimp bulkhead jacks.

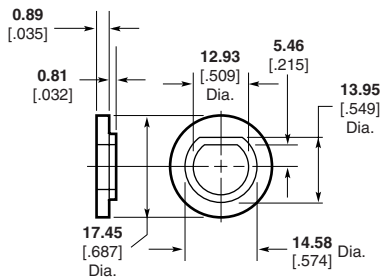

Part No. 330620 (2 Required)

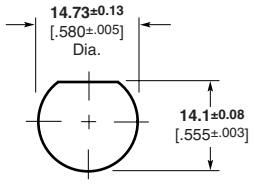

Recommended Panel Cutout

BELDEN is a trademark of Belden Wire and Cable Company.
BERK-TEK is a trademark of Nexans, Inc.
COMM/SCOPE is a trademark of Commscope, Inc.

Note: Part Numbers are RoHS compliant except: ♦ Indicates non-RoHS compliant.

Catalog 1307191
Revised 3-07

www.tycoelectronics.com

Dimensions are in millimeters and inches unless otherwise specified. Values in brackets are standard equivalents.

Dimensions are shown for reference purposes only. Specifications subject to change.

USA: 1-800-522-6752
Canada: 1-905-470-4425
Mexico: 01-800-733-8926
C. America: 52-55-1106-0803

South America: 55-11-2103-6000
Hong Kong: 852-2735-1628
Japan: 81-44-844-8013
UK: 44-8706-080-208

BNC Connectors, 50 Ohm (Continued)

Plugs, for JIS Cables, Crimp

Plating
Body — Nickel
Center Contact — Gold

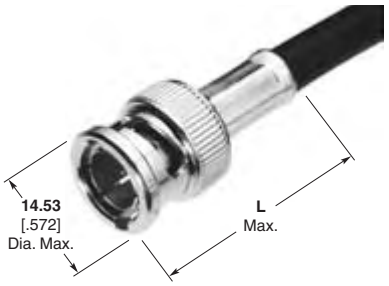

JIS Cable	Termination Type	Dielectric	Dim. L	Interchangeable Dies for PRO-CRIMPER Hand Tool 354940-1 or PRO-CRIMPER Adapter 679304-1	Part No.
3D-2V	Hex Crimp	Polyethylene	**33.53** 1.320	58436-1	**3-5221128-1**

Bulkhead Solder Jacks, Front Mount

Body Plating — Nickel

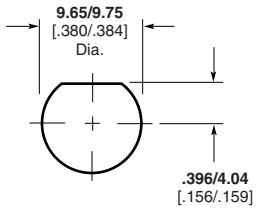

Recommended Panel Cutout

Without Solder Terminal

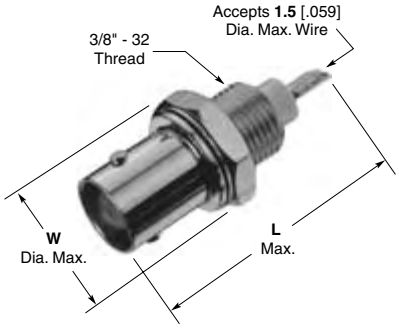

With Solder Terminal

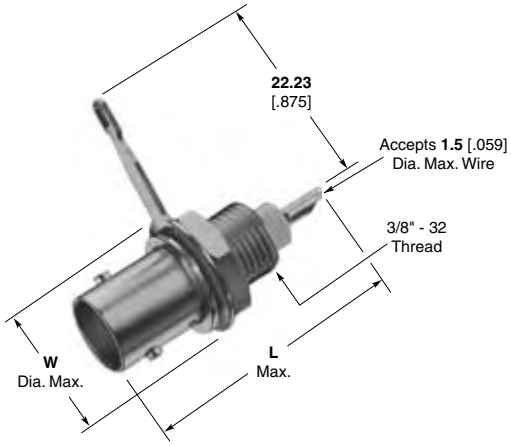

Contact Material	Dielectric	Dimensions L	Dimensions W	Panel Thickness	Insulating Bushing	Part No. Without Solder Terminal*	Part No. With Solder Terminal**
Silver	VALOX	**26.93** 1.060	**13.09** .515	**1.17-3.18** .046-.125	**227223-1** or **221951-1**	**5227754-3**	**5227755-3**
Gold	VALOX	**33.33** 1.312	**13.09** .515	**1.17-6.35** .046-.250	**227223-1** or **221951-1**	—	**5227169-7**
		26.93 1.060	**13.09** .515	**1.17-3.18** .046-.125	**227223-1** or **221951-1**	**5227754-2**	**5227755-2**
	PTFE	**33.33** 1.312	**13.09** .515	**1.17-6.35** .046-.250	**227223-1** or **221951-1**	**5227169-4**	**5227169-8**
		26.93 1.060	**13.09** .515	**1.17-3.18** .046-.125	**227223-1** or **221951-1**	**5227715-3**	**5227716-3**
Tin	VALOX	**33.33** 1.312	**13.09** .515	**1.17-6.35** .046-.250	**227223-1** or **221951-1**	—	**5227169-5**
		26.93 1.060	**13.09** .515	**1.17-3.18** .046-.125	**227223-1** or **221951-1**	**5227754-1**	**5227755-1**

*Includes lockwasher and jam nut.
**Includes solder terminal and jam nut.

VALOX is a trademark of General Electric Company.

Note: Part Numbers are RoHS compliant except: ♦ Indicates non-RoHS compliant.

Catalog 1307191
Revised 3-07

www.tycoelectronics.com

Dimensions are in millimeters and inches unless otherwise specified. Values in brackets are standard equivalents.

Dimensions are shown for reference purposes only. Specifications subject to change.

USA: 1-800-522-6752
Canada: 1-905-470-4425
Mexico: 01-800-733-8926
C. America: 52-55-1106-0803

South America: 55-11-2103-6000
Hong Kong: 852-2735-1628
Japan: 81-44-844-8013
UK: 44-8706-080-208

BNC Connectors, 50 Ohm (Continued)

Insulating Bushings

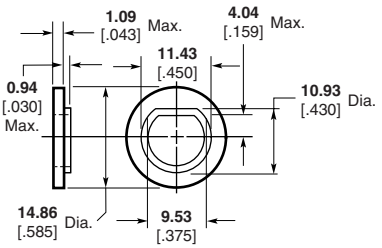

Part No. 227223-1

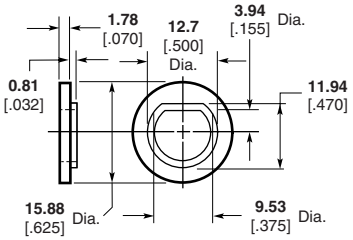

Part No. 221951-1

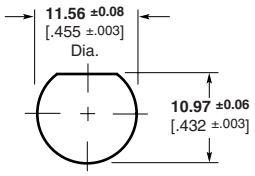

Recommended Panel Cutout

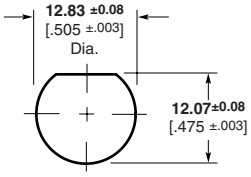

Recommended Panel Cutout

Isolated Bulkhead Solder Jacks, Front Mount

Plating
Body — Nickel
Dielectric — White VALOX

Center Contact Plating	Flange & Thread Material	Part No.
Tin	VALOX	**5227726-1**
Silver	VALOX	**5227726-2**
Gold	VALOX	**5227726-3**

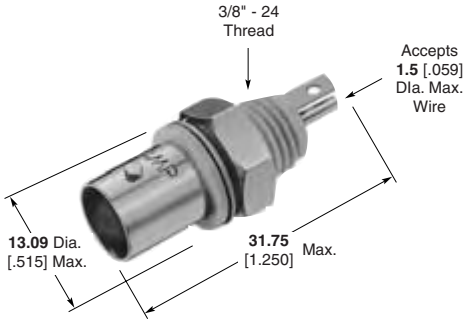

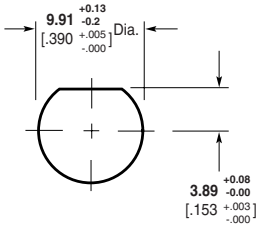

Panel Thickness **1.17-6.35** [.046-.250]

Recommended Panel Cutout

Plating
Body — Nickel
Center Contact — Silver
Dielectric — Black VALOX
Flange & Thread Material — Black VALOX

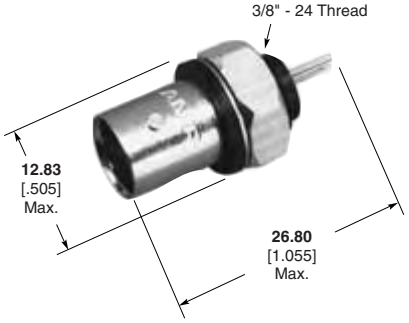

Part No. 5414194-1

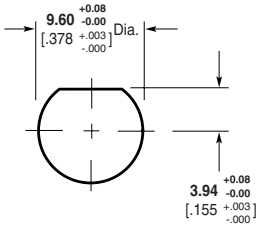

Panel Thickness **1.17-3.18** [.046-.125]

Recommended Panel Cutout

Sealed Bulkhead Solder Jack, Rear Mount

Plating
Body — Nickel
Center Contact — Gold
Dielectric — Polymethylpentene
This connector is designed to prevent moisture from entering the interface from the rear of the connector.

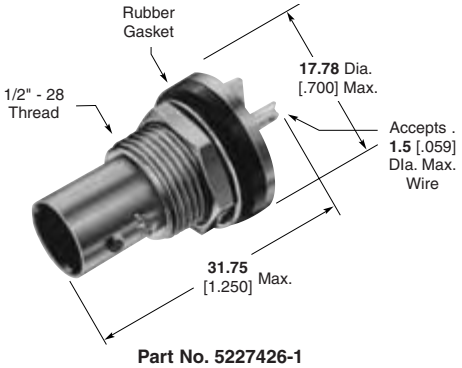

Part No. 5227426-1

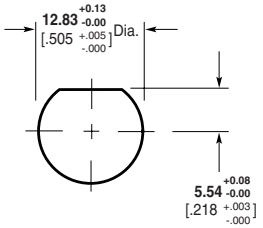

Maximum Panel Thickness **6.35** [.250]

Recommended Panel Cutout

VALOX is a trademark of General Electric Company.

Note: Part Numbers are RoHS compliant except: ♦ Indicates non-RoHS compliant.

Catalog 1307191
Revised 3-07

www.tycoelectronics.com

Dimensions are in millimeters and inches unless otherwise specified. Values in brackets are standard equivalents.

Dimensions are shown for reference purposes only. Specifications subject to change.

USA: 1-800-522-6752
Canada: 1-905-470-4425
Mexico: 01-800-733-8926
C. America: 52-55-1106-0803

South America: 55-11-2103-6000
Hong Kong: 852-2735-1628
Japan: 81-44-844-8013
UK: 44-8706-080-208

BNC Connectors, 50 Ohm (Continued)

Right-Angle Jacks PC Board/Panel Mount

Body — Nickel
Dielectric — Polymethylpentene

VALOX Body

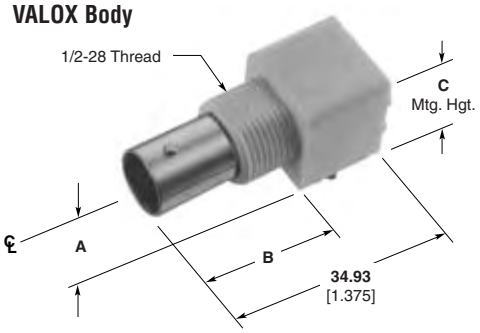

Metal Body

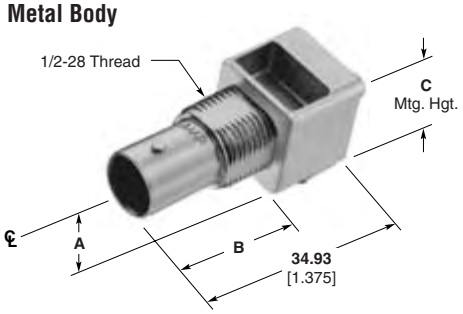

Mounting Post Style

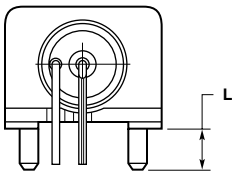

Compliant Post

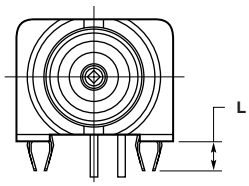

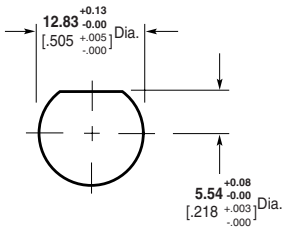

Maximum Panel Thickness **6.1** [.240]

Recommended Panel Cutout

Body Material	Center Contact Plating	Dimensions A	B	C	Part No. Without Mounting Posts	With Mounting Posts	L	With Compliant Posts	L
VALOX, White	Tin	**8.59** .338	**21.21** .835	**15.88** .625	**5226990-1**	**5227161-1**	**3.48** .137	—	—
	Gold1	**8.59** .338	**21.21** .835	**15.88** .625	**5226990-3**	**5227161-3**	**3.48** .137	—	—
	Gold1	**6.91** .272	**21.21** .835	**13.18** .519	—	**5227161-7**	**3.48** .137	—	—
VALOX, Black	Tin	**8.59** .338	**21.21** .835	**15.88** .625	—	**5227161-2**	**3.48** .137	—	—
	Gold1	**8.59** .338	**21.21** .835	**15.88** .625	**5226990-6**	**5227161-6**	**3.48** .137	—	—
	Gold1	**6.91** .272	**21.21** .835	**13.18** .519	—	**5227161-9**	**3.48** .137	—	—
	Gold1	**6.17** .243	**21.21** .835	**11.68** .460	—	**5415046-1**	—	—	—
Metal	Tin	**8.26** .325	**20.83** .820	**15.88** .625	—	**5227661-1**	**3.48** .137	—	—
	Gold1	**8.26** .325	**20.83** .820	**15.88** .625	**5227676-1**	**5227677-1**	**3.48** .137	—	—
	Gold1	**6.91** .272	**20.83** .820	**12.70** .500	**1274668-1**	**5413879-1**	**3.48** .137	—	—
	Gold2	**6.91** .272	**20.83** .820	**12.70** .500	—	**5413879-2**	**3.48** .137	—	—
High Temp. Housing	Gold1	**6.91** .272	**21.21** .835	**13.18** .519	—	—	—	**5415218-5**	**2.79** .110

Plating:
Gold1 — 0.00076 [.000030] thick
Gold2 — 0.00127 [.000050] thick
Note: If an Insulating Bushing is required see part number 330620 and Panel Cutout on page 54.

Lockwasher and Jam Nut



Part No. 1-329632-2



Part No. 1-329631-2

Without Mounting Posts

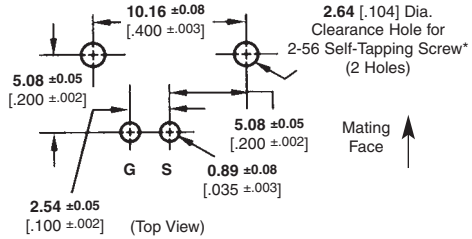

With Mounting Posts

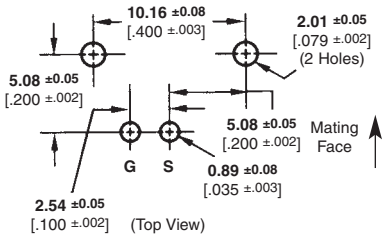

Recommended PC Board Layouts

VALOX is a trademark of General Electric Company.

Note: Part Numbers are RoHS compliant except: ♦ Indicates non-RoHS compliant.

Catalog 1307191
Revised 3-07

www.tycoelectronics.com

Dimensions are in millimeters and inches unless otherwise specified. Values in brackets are standard equivalents.

Dimensions are shown for reference purposes only. Specifications subject to change.

USA: 1-800-522-6752
Canada: 1-905-470-4425
Mexico: 01-800-733-8926
C. America: 52-55-1106-0803

South America: 55-11-2103-6000
Hong Kong: 852-2735-1628
Japan: 81-44-844-8013
UK: 44-8706-080-208

BNC Connectors, 50 Ohm (Continued)

Vertical Jacks
PC Board/Panel Mount

Plating
Body — Nickel
Dielectric — Polymethylpentene

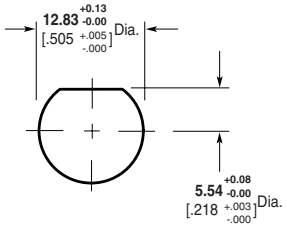

Maximum Panel Thickness **6.1** [.240]

Recommended Panel Cutout

Lockwasher and Jam Nut



Part No. 1-329632-2 **Part No. 1-329631-2**

VALOX Body

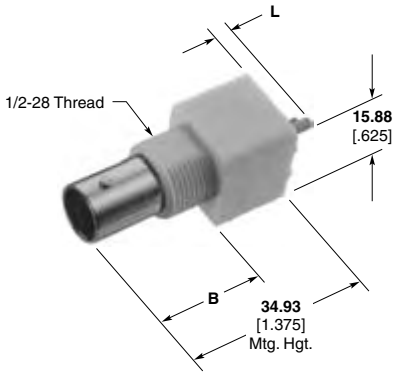

Metal Body

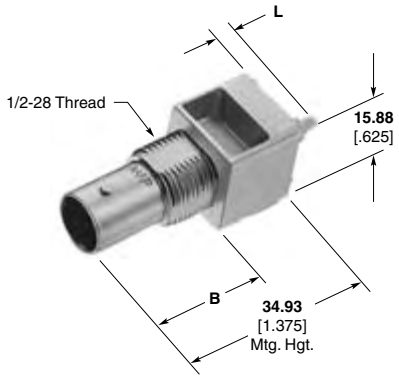

Body Material	Center Contact Plating	Dim. B	Dim. L	Part No. Without Mounting Posts	Part No. With Mounting Posts
VALOX, White	Tin	**21.21** .835	**3.48** .137	**5226993-1**	**5227222-1**
	Gold	**21.21** .835	**3.48** .137	**5226993-3**	**5227222-3**
VALOX, Black	Tin	**21.21** .835	**3.48** .137	**5226993-2**	**5227222-2**
	Gold	**21.21** .835	**3.48** .137	**5226993-6**	**5227222-6**
Metal	Tin	**20.83** .820	**3.48** .137	—	**5227671-1**
	Gold	**20.83** .820	**3.48** .137	—	**5227673-1**

Note: If an Insulating Bushing is required see part number 330620 and Panel Cutout on page 54.

Without Mounting Posts

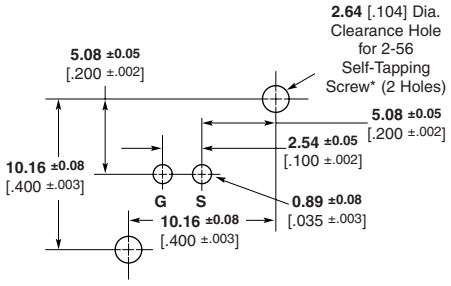

(Top View)

With Mounting Posts

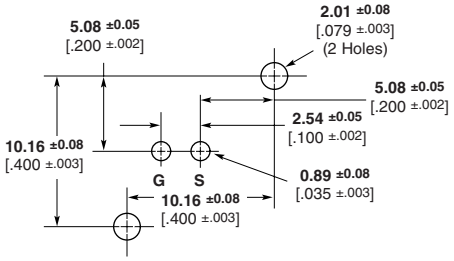

(Top View)

Recommended PC Board Layouts

* Screw for board thickness of **2.38** [.093] or greater **Part No. 221108-2.**
Screw for thickness of less than **2.38** [.093] **Part No. 221108-4.**

VALOX is a trademark of General Electric Company.

Note: Part Numbers are RoHS compliant except: ♦ Indicates non-RoHS compliant.

Catalog 1307191
Revised 3-07

www.tycoelectronics.com

Dimensions are in millimeters and inches unless otherwise specified. Values in brackets are standard equivalents.

Dimensions are shown for reference purposes only. Specifications subject to change.

USA: 1-800-522-6752
Canada: 1-905-470-4425
Mexico: 01-800-733-8926
C. America: 52-55-1106-0803

South America: 55-11-2103-6000
Hong Kong: 852-2735-1628
Japan: 81-44-844-8013
UK: 44-8706-080-208

BNC Connectors, 50 Ohm (Continued)

Jacks with Mounting Flanges PC Board/Panel Mount

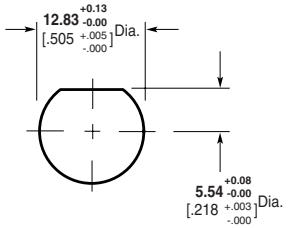

Maximum Panel Thickness **6.1** [.240]

Recommended Panel Cutout

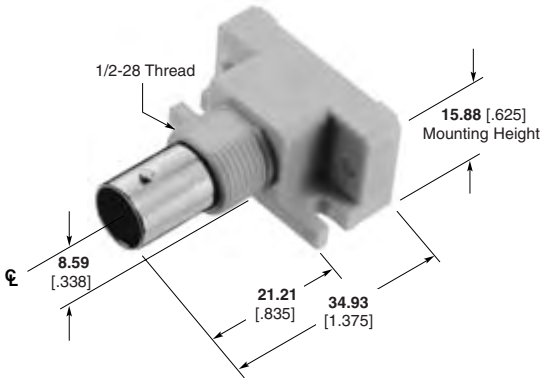

Body Material	Center Contact Plating	Part No.
VALOX, White	Tin	**5226978-1**
	Gold	**5226978-3**

Lockwasher and Jam Nut



Part No. 1-329632-2



Part No. 1-329631-2

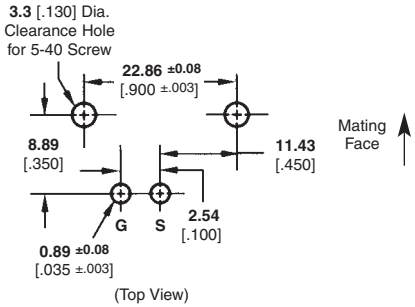

Recommended PC Board Layout

VALOX is a trademark of General Electric Company.

Note: Part Numbers are RoHS compliant except: ♦ Indicates non-RoHS compliant.

Catalog 1307191
Revised 3-07

www.tycoelectronics.com

Dimensions are in millimeters and inches unless otherwise specified. Values in brackets are standard equivalents.

Dimensions are shown for reference purposes only. Specifications subject to change.

USA: 1-800-522-6752
Canada: 1-905-470-4425
Mexico: 01-800-733-8926
C. America: 52-55-1106-0803

South America: 55-11-2103-6000
Hong Kong: 852-2735-1628
Japan: 81-44-844-8013
UK: 44-8706-080-208

BNC Connectors, 50 Ohm (Continued)

Vertical Metalized Jacks
PC Board Mount

Recommended PC Board Layouts

Style A

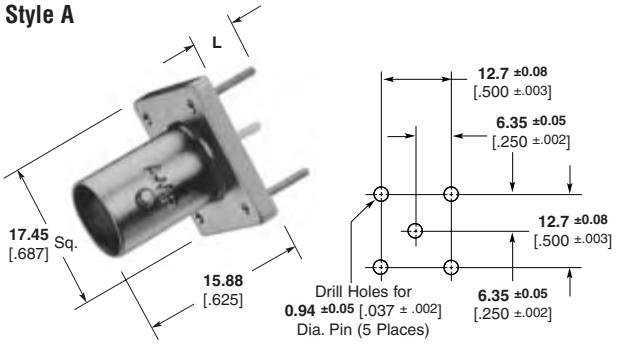

Style B

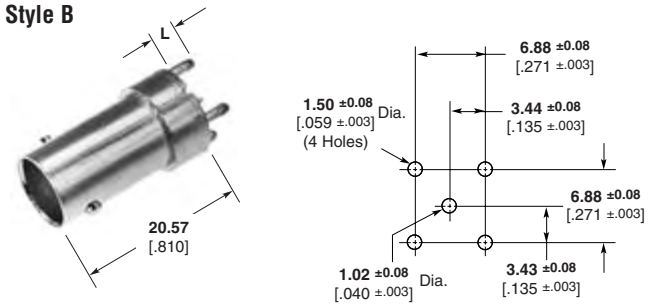

Body Plating	Center Contact Plating	Dielectric	Style	Leg Length L	Part No.
Nickel	Silver	VALOX	A	6.35 .250	5227699-1
	Gold	VALOX	A	6.35 .250	5227699-2
	Tin	VALOX	A	6.35 .250	5227699-3
	Gold	VALOX	A	3.81 .150	5414460-1[1]
	Silver	VALOX	C	4.45 .175	5222420-1
	Gold	VALOX	E	6.35 .250	5415189-1
Tin-Lead	Gold	PTFE	B	3.30 .130	5413969-2
	Silver	VALOX	C	3.18 .125	5414305-1
	Gold	VALOX	D	3.43 .135	5221123-2

[1]With **.76** [.030] standoffs on top of legs.

Style C

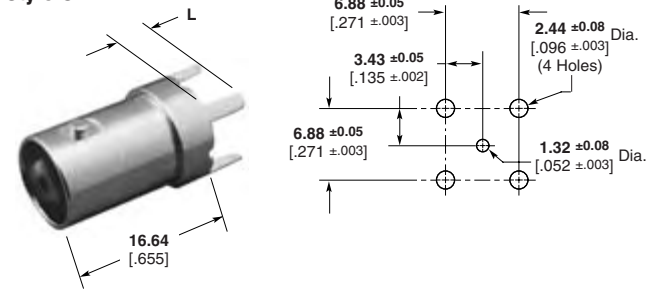

Style D

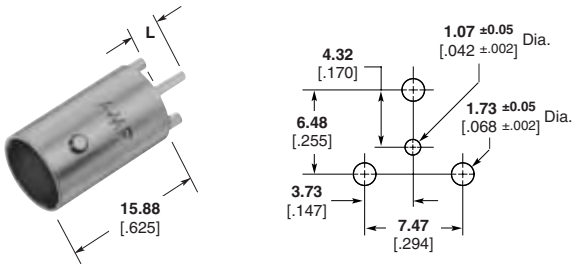

Style E (Panel Mount)

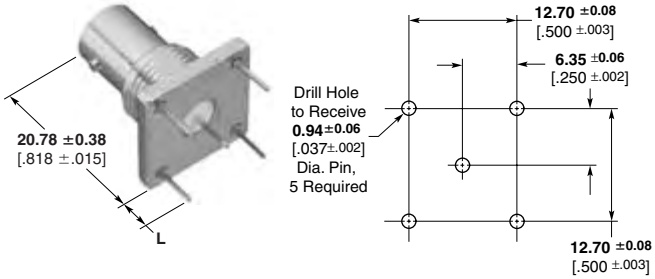

VALOX is a trademark of General Electric Company.

Note: Part Numbers are RoHS compliant except: ♦ Indicates non-RoHS compliant.

Catalog 1307191
Revised 3-07

www.tycoelectronics.com

Dimensions are in millimeters and inches unless otherwise specified. Values in brackets are standard equivalents.

Dimensions are shown for reference purposes only. Specifications subject to change.

USA: 1-800-522-6752
Canada: 1-905-470-4425
Mexico: 01-800-733-8926
C. America: 52-55-1106-0803

South America: 55-11-2103-6000
Hong Kong: 852-2735-1628
Japan: 81-44-844-8013
UK: 44-8706-080-208

BNC Connectors, 50 Ohm (Continued)

Vertical Metalized Jacks, PC Board Mount

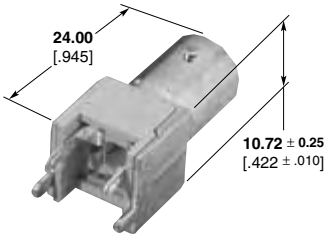

Part No. 1274314-1
(Switching)

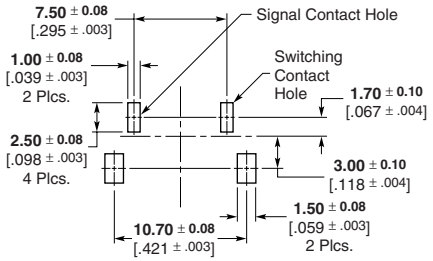

Recommended
PC Board Layout

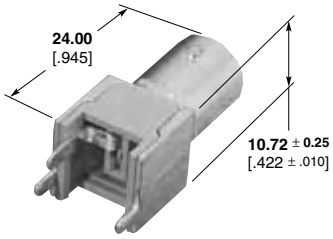

Part No. 1274315-1

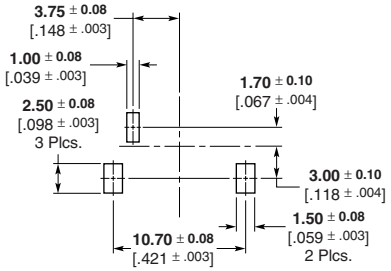

Recommended
PC Board Layout

Body Plating	Contact Plating	Dielectric	Part No.
Tin	Silver	Polyphenylene	**6274314-1**
Tin	Silver	Polyphenylene	**6274315-1**

Press Fit Vertical Metalized Jack, PC Board Mount

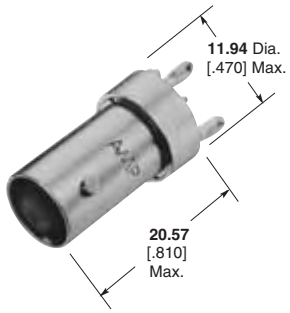

Part No. 5222006-1

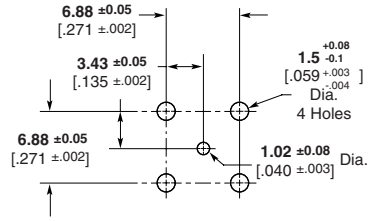

Recommended PC Board Layout
PC Board Thickness Not Less Than **0.99** [.093]

Insulating Bushing

Material — Polypropylene
Part No. 222163-1
Only to be used on Part Nos. 5222006-1 & 5222462-1

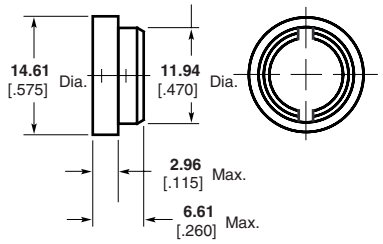

Note: Part Numbers are RoHS compliant except: ♦ Indicates non-RoHS compliant.

Catalog 1307191
Revised 3-07

www.tycoelectronics.com

Dimensions are in millimeters and inches unless otherwise specified. Values in brackets are standard equivalents.

Dimensions are shown for reference purposes only. Specifications subject to change.

USA: 1-800-522-6752
Canada: 1-905-470-4425
Mexico: 01-800-733-8926
C. America: 52-55-1106-0803

South America: 55-11-2103-6000
Hong Kong: 852-2735-1628
Japan: 81-44-844-8013
UK: 44-8706-080-208

BNC Connectors, 50 Ohm (Continued)

Right-Angle Metalized Jacks, PC Board Mount

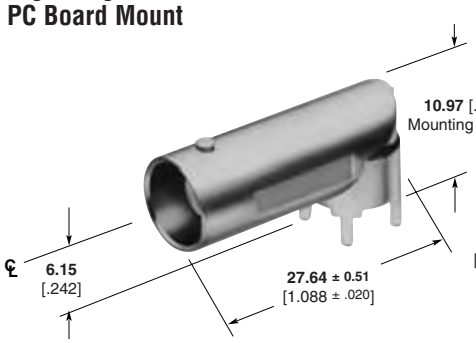

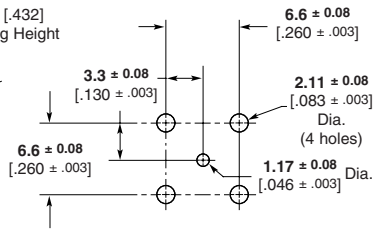

Maximum PC Board Thickness **2.54** [.100]

Recommended PC Board Layout

Body Plating	Dielectric	Center Contact Length	Part No.
Nickel	Polymethyl-pentene	**4.34** .171	**5413631-1**
Tin	PTFE	**4.34** .171	**5413631-2**
Nickel	Polymethyl-pentene	**3.33** .131	**5413631-3**

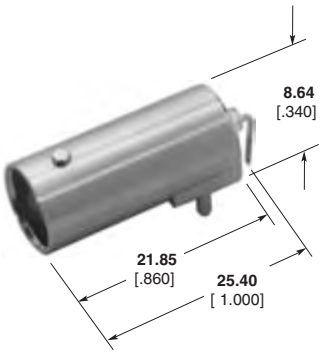

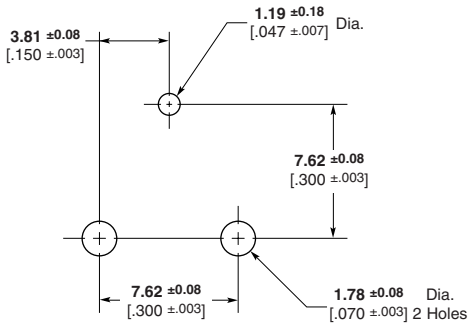

Recommended PC Board Layouts

Body	Dielectric	Contact	Part No.
Nickel	TPX	Gold	**5414373-1**

Right-Angle Metalized Jacks, PC Board/Panel Mount

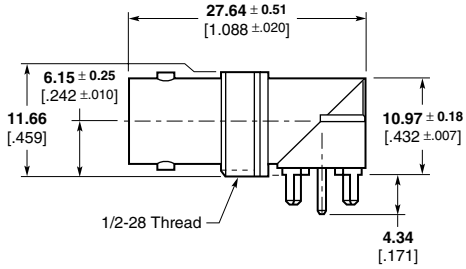

Lockwasher and Jam Nut see page 59.

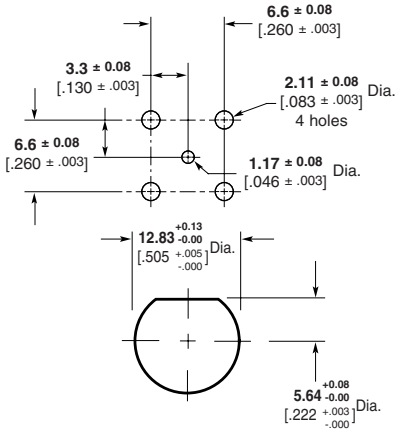

Maximum Panel Thickness **6.35** [.250]

Recommended Panel Cutout

Body Plating	Dielectric	Part No.
Tin	PTFE	**5415025-2**
Tin	TPX	**5415025-1**

TPX is a trademark of Mitsui Chemicals America, Inc.

Note: Part Numbers are RoHS compliant except: ♦ Indicates non-RoHS compliant.

Catalog 1307191
Revised 3-07

www.tycoelectronics.com

Dimensions are in millimeters and inches unless otherwise specified. Values in brackets are standard equivalents.

Dimensions are shown for reference purposes only. Specifications subject to change.

USA: 1-800-522-6752
Canada: 1-905-470-4425
Mexico: 01-800-733-8926
C. America: 52-55-1106-0803

South America: 55-11-2103-6000
Hong Kong: 852-2735-1628
Japan: 81-44-844-8013
UK: 44-8706-080-208

BNC Connectors, 50 Ohm (Continued)

Tee Adapters

Style A
(Jack-Plug-Jack)

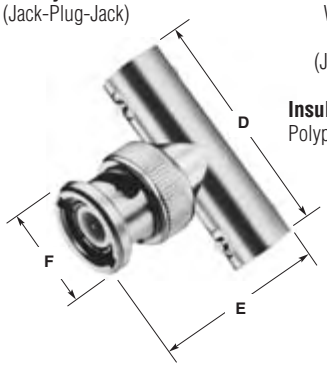

Style B
With Insulated Cover
(Jack-Plug-Jack)

Insulation Material
Polyphenylene oxide

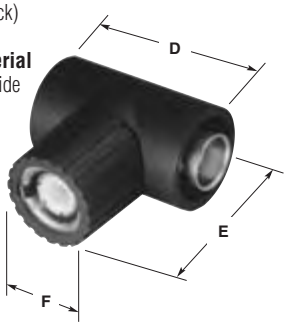

Style C
(Jack-Jack-Jack)

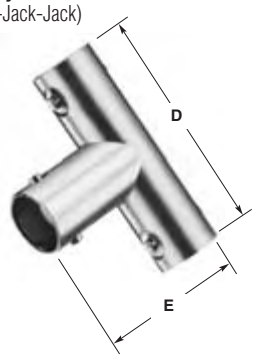

Style	Body Material and Plating	Center Contact Material and Plating	Dielectric	Dimensions D	Dimensions E	Dimensions F	Comparable UG/U Connector	Packaging No. Per Pkg.	Part No.
A	Brass, Nickel	BE CU, Gold (30)[2]	PTFE	**32.54** 1.281	**26.19** 1.031	**14.27** .562	274A	Bulk (100)	**221543-2**
	Zinc, Nickel	PH BR, Gold (15)[2]	Acetal	**33.02** 1.300	**27.31** 1.075	**14.50** .571	—	Bulk (100)	**5413592-2**
		BE CU, Gold (30)[2]	Acetal	**33.02** 1.300	**27.31** 1.075	**14.50** .571	—	Bulk (100)	**5413592-6**
		PH BR, Gold (15)[2]	Acetal	**33.02** 1.300	**27.31** 1.075	**14.50** .571	—	Individual (1)[3]	**5413592-9**
		BE CU, Silver (200)[2]	Acetal	**33.02** 1.300	**27.31** 1.075	**14.50** .571	—	Individual (1)	**1-5413592-1**
B	Zinc, Nickel	BE CU, Gold (30)[2]	Acetal	**32.54** 1.281	**31.12** 1.225	**17.15** .675	—	Bulk (100)	**5413366-2**[1]
C	Brass, Nickel	BE CU, Silver (200)[2]	PTFE	**32.54** 1.281	**23.37** .920	—	—	Bulk (100)	**221988-1**
	Zinc, Nickel	PH BR, Gold (50)[2]	Acetal	**32.54** 1.281	**23.62** .930	—	—	Bulk (100)	**5414311-1**

[1]Gray insulation cover
[2](Microinches min thickness)
[3](Special graphics)

Tee Adapter Covers

Material — Polypropylene, general purpose

Color	Part No.
Black	**221586-1**
Ivory	**221586-3**



Note: Part Numbers are RoHS compliant except: ♦ Indicates non-RoHS compliant.

Catalog 1307191
Revised 3-07

www.tycoelectronics.com

Dimensions are in millimeters and inches unless otherwise specified. Values in brackets are standard equivalents.

Dimensions are shown for reference purposes only. Specifications subject to change.

USA: 1-800-522-6752
Canada: 1-905-470-4425
Mexico: 01-800-733-8926
C. America: 52-55-1106-0803

South America: 55-11-2103-6000
Hong Kong: 852-2735-1628
Japan: 81-44-844-8013
UK: 44-8706-080-208

BNC Connectors, 50 Ohm (Continued)

Jack-Jack Adapters

Style A

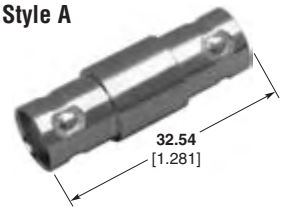

Style B

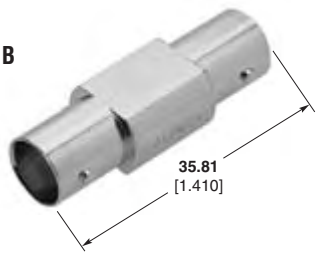

Body Plating	Center Contact Plating	Dielectric	Style	Part No.
Nickel	Silver	PTFE	A	**221551-1**
Nickel	Gold	PTFE	A	**221551-3**
Nickel	Gold	Polymethyl-pentene	B	**5414414-1**

Bulkhead Jack-Jack Adapters

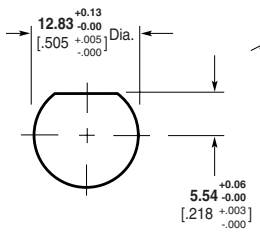

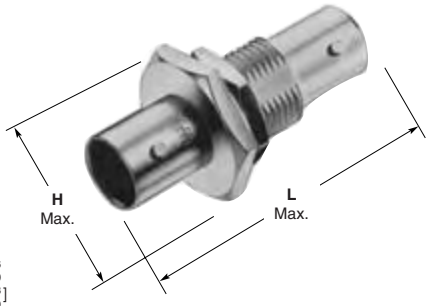

Recommended Panel Cutout
H= **11/16** across flats, **20.32** [.800] across points.

Body Plating	Center Contact Plating	Dimensions H	Dimensions L	Dielectric	Part No.
Nickel	Silver	**17.45** .687	**38.10** 1.500	PTFE	**330024**
Nickel	Gold1	**17.78** .700	**36.07** 1.420	Poly-ethylene	**5228226-1**
Nickel	Gold2	**17.78** .700	**36.07** 1.420	Poly-ethylene	**5228226-3**

Plating:
Gold1 — 0.00127 [.000050] thick Gold2 — 0.00076 [.000015] thick
Note: If an Insulating Bushing is required see part number 330620 and Panel Cutout on page 54.

Isolated Bulkhead Jack-Jack Adapter

Body Plating	Center Contact Plating	Dielectric	Part No.
Nickel	Gold	Polymethylpentene	**5414105-1**

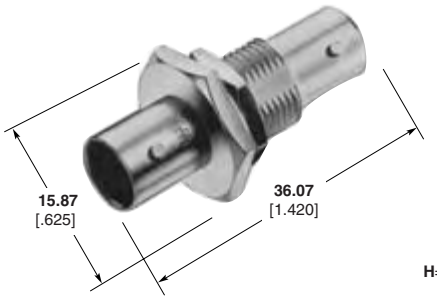

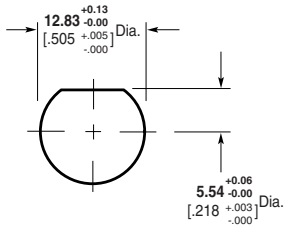

Recommended Panel Cutout
H= **11/16** across flats, **20.32** [.800] across points.

Plug-Plug Adapter

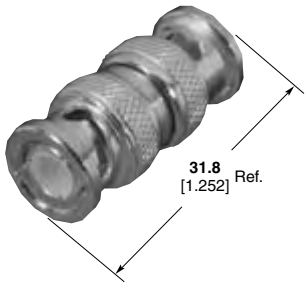

Contact Plating	Body Plating	Part No.
Gold	Nickel	**415796-1**

Right-Angle Adapters

(Jack-Plug)

Body Plating	Center Contact Plating	Dielectric	Part No.
Nickel	Silver	PTFE	**5329517**
Nickel	Gold	PTFE	**5222165-2**
Nickel	Gold	Polymethylpentene	**5414666-1**

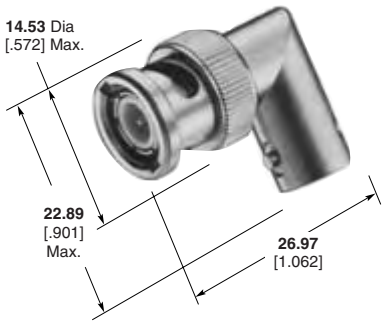

Note: Part Numbers are RoHS compliant except: ♦ Indicates non-RoHS compliant.

Catalog 1307191
Revised 3-07

www.tycoelectronics.com

Dimensions are in millimeters and inches unless otherwise specified. Values in brackets are standard equivalents.

Dimensions are shown for reference purposes only. Specifications subject to change.

USA: 1-800-522-6752
Canada: 1-905-470-4425
Mexico: 01-800-733-8926
C. America: 52-55-1106-0803

South America: 55-11-2103-6000
Hong Kong: 852-2735-1628
Japan: 81-44-844-8013
UK: 44-8706-080-208

BNC Connectors, 50 Ohm (Continued)

Terminator Plugs 50, 75, 93 Ohm

Plating

Body — Nickel
Center Contact — Gold
Dielectric — Polyethylene

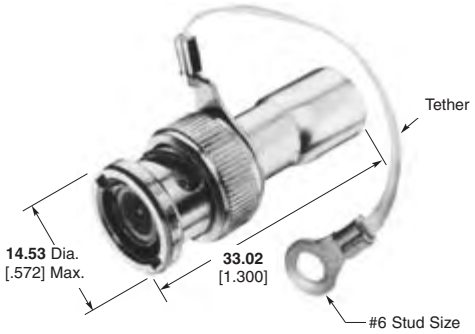

Resistor Specification	Part No.	
	With Tether	Without Tether
1 Watt, 50 Ohm	**5221629-1**	**5221629-4**
1 Watt, 75 Ohm	**5221629-2**	**5221629-5**
1 Watt, 93 Ohm	—	**5221629-6**
0.5 Watt, 75 Ohm	—	—
1 Watt, 50 Ohm	**1-5221629-6**[1]	—

[1] Tether is conductive with #4 stud size

Insulated Terminators

Insulation Material
Polyphenylene oxide

Long Cover

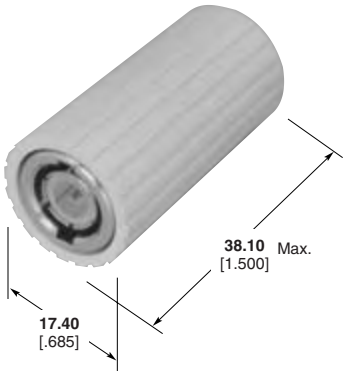



Short Cover*

Register Specification	Color	Cover Style	Part No.
1 Watt, 50 Ohm	Gray	Long	**5413557-1**
		Short	**5413364-2**
	Black	Long	**5413557-2**

* The Short Cover is required when mating the Terminator with a Tee Adapter.

Jack Covers

Body Plating	Part No.
Silver	**330022**
Nickel	**1-330022-2**

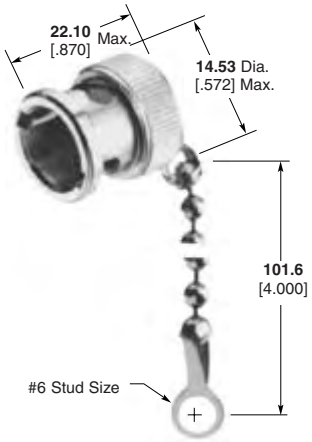

Shorting Caps

Plating

Body — Nickel
Center Contact — Gold

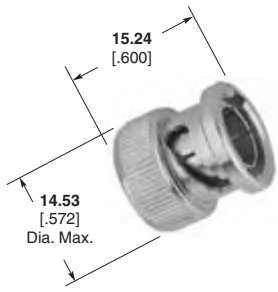

Part No. 413453-1

Note: Part Numbers are RoHS compliant except: ♦ Indicates non-RoHS compliant.

Catalog 1307191
Revised 3-07

www.tycoelectronics.com

Dimensions are in millimeters and inches unless otherwise specified. Values in brackets are standard equivalents.

Dimensions are shown for reference purposes only. Specifications subject to change.

USA: 1-800-522-6752
Canada: 1-905-470-4425
Mexico: 01-800-733-8926
C. America: 52-55-1106-0803

South America: 55-11-2103-6000
Hong Kong: 852-2735-1628
Japan: 81-44-844-8013
UK: 44-8706-080-208

BNC Connectors, 75 Ohm

Plugs, Crimp

These connectors have been designed for optimum performance and have a true 75 ohm impedance the complete length of the connector. The crimp die tooling listed below is different from the equivalent 50 ohm connectors.

Hex and O Crimp

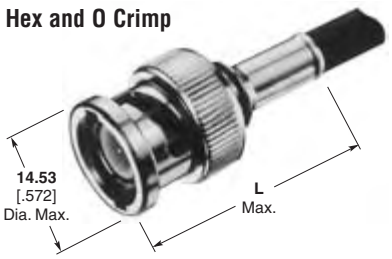

Plugs

RG/U Cable	Termination Type	Center Contact Plating	Body Plating	Dielectric	Style	Dim. L	Interchangeable Dies for PRO-CRIMPER Hand Tool 354940-1 or PRO-CRIMPER Adapter 679304-1	Interchangeable Dies for Hand Tool 69710-1 & 626 Pneu. Head 318161-1	Part No.
179, 179A, 179B, 187, 187A, 161, BELDEN 9221	Hex Crimp	Gold	Nickel	Polyethelene	Commercial	**29.46** 1.160	58425-2	—	**5413589-8**
	O Crimp	Gold	Nickel	Polyethelene	Commercial	**35.56** 1.140	318451-2	—	**5221185-8**
AT&T 735A	Hex Crimp	Gold	Nickel	Polyethelene	Commercial	**29.46** 1.160	58425-2	—	**1-5413589-0**
	O Crimp	Gold	Nickel	Polyethelene	Commercial	**27.69** 1.090	58174-1	58248-3	**1-5221185-8**
BELDEN 8218	Hex Crimp	Gold	Nickel	Polyethelene	Commercial	**29.46** 1.160	58425-2	—	**5413589-3**
	O Crimp	Gold	Nickel	Polyethelene	Commercial	**27.69** 1.090	58174-1	58248-3	**5221185-3**
140, 210, 62, 62A, 62B, 59, 59A, 59B, BELDEN 9291, 9209, 9269	Hex Crimp	Gold	Nickel	Polyethelene	Commercial	**29.46** 1.160	58425-1	—	**5413589-2**
	O Crimp	Gold	Nickel	Polyethelene	Commercial	**27.69** 1.090	58536-1	58248-2	**5221185-2**
302, BELDEN 89269, 88241, Hi-Temp 62A, Times PL-62, Berk Tek BTDC-59, BTDC-62	Hex Crimp	Gold	Nickel	Polyethelene	Commercial	**29.46** 1.160	58425-1	—	**5413589-1**
BELDEN 8212, 9104, 9112, 9167, 9240, 9259, 9266, Times FM-59, (RG 59 Type with 20 AWG C.C.)	Hex Crimp	Gold	Nickel	Polyethelene	Commercial	**29.46** 1.160	58425-1	—	**5413589-9**
	O Crimp	Gold	Nickel	Polyethelene	Commercial	**27.69** 1.090	58536-1	58248-2	**5221185-9**
BELDEN 9145, AT&T 734A	Hex Crimp	Gold	Nickel	Polyethelene	Commercial	**29.46** 1.160	58425-1	—	**5413589-7**
	O Crimp	Gold	Nickel	Polyethelene	Commercial	**27.69** 1.090	58536-1	—	**1-5221185-0**
BELDEN 9248, 9114	O Crimp	Gold	Nickel	Polyethelene	Commercial	**25.65** 1.010	58536-1	—	**5221185-1**
6, 6A	O Crimp	Gold	Nickel	Polyethelene	Commercial	**37.85** 1.490	58538-1	58248-1	**5221185-7**
BELDEN 8281, 9141, 9231, Western Electric 724, 728, 3049	Hex Crimp	Gold	Nickel	Polyethelene	Commercial	**29.46** 1.160	58425-3	—	**5413589-5**
	O Crimp	Gold	Nickel	Polyethelene	Commercial	**28.45** 1.120	58538-1	58248-1	**5221185-5**
COMM/SCOPE S59 Hec	O Crimp	Gold	Nickel	Polyethelene	Commercial	**28.96** 1.140	58536-1	—	**2-5221185-9**
COMM/SCOPE F59 Hec-z	O Crimp	Gold	Nickel	Polyethelene	Commercial	**28.96** 1.140	58536-1	—	**3-5221185-1**

AT&T is a trademark of AT&T Corporation.
BELDEN is a trademark of Belden Wire and Cable Company.
COMM/SCOPE is a trademark of Commscope, Inc.

Note: Part Numbers are RoHS compliant except: ♦ Indicates non-RoHS compliant.

BNC Connectors, 75 Ohm (Continued)

Plugs for JIS Cables, Crimp

Plating

Body — Nickel
Center Contact — Gold

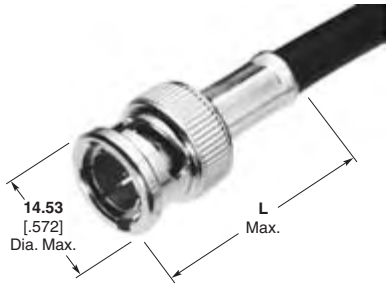

JIS Cable	Termination Type	Dielectric	Dim. L	Interchangeable Dies for PRO-CRIMPER Hand Tool 354940-1 or PRO-CRIMPER Adapter 679304-1	Part No.
3C-2V	Hex Crimp	Polymethylpentene	**29.46** 1.160	58425-1	**1-5413589-1**
2.5C-2V	Hex Crimp	Polymethylpentene	**29.46** 1.160	58425-2	**1-5413589-6**

Bulkhead Jacks for JIS Cables, Crimp

Plating

Body — Nickel
Center Contact — Gold
Dielectric — Polymethylpentene

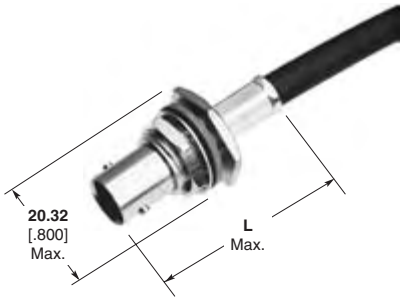

JIS Cable	Termination Type	Dielectric	Dim. L	Interchangeable Dies for PRO-CRIMPER Hand Tool 354940-1 or PRO-CRIMPER Adapter 679304-1	Part No.
1.5C-2V	Hex Crimp	75Ω	**36.83** 1.450	58425-2	**5413590-4***

*Packaged in 100 pieces per bag.

Note: Part Numbers are RoHS compliant except: ♦ Indicates non-RoHS compliant.

Catalog 1307191
Revised 3-07

www.tycoelectronics.com

Dimensions are in millimeters and inches unless otherwise specified. Values in brackets are standard equivalents.

Dimensions are shown for reference purposes only. Specifications subject to change.

USA: 1-800-522-6752
Canada: 1-905-470-4425
Mexico: 01-800-733-8926
C. America: 52-55-1106-0803

South America: 55-11-2103-6000
Hong Kong: 852-2735-1628
Japan: 81-44-844-8013
UK: 44-8706-080-208

BNC Connectors, 75 Ohm (Continued)

Right-Angle Plugs, Crimp

Hex and O Crimp

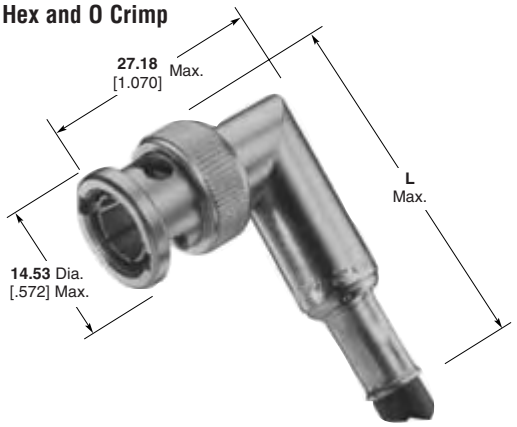

RG/U Cable	Termination Type	Center Contact Plating	Body Plating	Dielectric	Style	Dim. L	Interchangeable Dies for PRO-CRIMPER Hand Tool 354940-1 or PRO-CRIMPER Adapter 679304-1	Interchangeable Dies for Hand Tool 69710-1 & 626 Pneu. Head 318161-1	Part No.
179, 179A, 179B, 187, 187A, 161 BELDEN 9221	Hex Crimp	Gold	Nickel	Polymethyl-pentene	Commercial	**39.45** 1.553	58425-2	—	**5413588-8**
AT&T 735A	Hex Crimp	Gold	Nickel	Polymethyl-pentene	Commercial	**39.45** 1.553	58425-2	—	**1-5413588-0**
AT&T KS 19224 L2, RD179 Double Braid	Hex Crimp	Gold	Nickel	Polymethyl-pentene	Commercial	**39.45** 1.553	58425-2	—	**5413588-4**
140, 210, 62, 62A, 62B, 59, 59A, 59B, BELDEN 9291, 9209, 9269	Hex Crimp	Gold	Nickel	Polymethyl-pentene	Commercial	**39.45** 1.553	58425-1	—	**5413588-2**
	O Crimp	Gold	Nickel	Polymethyl-pentene	Commercial	**39.88** 1.570	58536-1	58248-2	**5221402-2**
BELDEN 8212, 9104, 9112, 9240, 9167, 9259, 9266, Times FM-59, (RG 59 Type with 20 AWG C.C.)	Hex Crimp	Gold	Nickel	Polymethyl-pentene	Commercial	**39.45** 1.553	58425-1	—	**5413588-9**
BELDEN 9145, AT&T 734A	O Crimp	Gold	Nickel	Polymethyl-pentene	Commercial	**39.88** 1.570	58536-1	—	**5221402-4**

AT&T is a trademark of AT&T Corporation.
BELDEN is a trademark of Belden Wire and Cable Company.

Note: Part Numbers are RoHS compliant except: ♦ Indicates non-RoHS compliant.

Catalog 1307191
Revised 3-07

www.tycoelectronics.com

Dimensions are in millimeters and inches unless otherwise specified. Values in brackets are standard equivalents.

Dimensions are shown for reference purposes only. Specifications subject to change.

USA: 1-800-522-6752
Canada: 1-905-470-4425
Mexico: 01-800-733-8926
C. America: 52-55-1106-0803

South America: 55-11-2103-6000
Hong Kong: 852-2735-1628
Japan: 81-44-844-8013
UK: 44-8706-080-208

BNC Connectors, 75 Ohm (Continued)

Jacks, Crimp

Hex and O Crimp



RG/U Cable	Termination Type	Center Contact Plating	Body Plating	Dielectric	Style	Dim. L	Interchangeable Dies for PRO-CRIMPER Hand Tool 354940-1 or PRO-CRIMPER Adapter 679304-1	Interchangeable Dies for Hand Tool 69710-1 & 626 Pneu. Head 318161-1	Part No.
179, 179A, 179B, 161, 187, 187A, BELDEN 9221	Hex Crimp	Gold	Nickel	Polyethelene	Commercial	**33.02** 1.300	58425-2	—	**5413760-8**
	O Crimp	Gold	Nickel	Polyethelene	Commercial	**30.48** 1.200	318451-2	—	**5221199-5**
BELDEN 8218	Hex Crimp	Gold	Nickel	Polyethelene	Commercial	**33.02** 1.300	58425-2	—	**5413760-3**
140, 210, 62, 62A, 62B, 59, 59A, 59B, BELDEN 9291, 9209, 9269	O Crimp	Gold	Nickel	Polyethelene	Commercial	**30.48** 1.200	58536-1	58248-2	**5221199-2**
302, BELDEN 88241, 89269, Hi-Temp 62A, Times PL-62, Berk Tek BTDC-59, BTDC-62	Hex Crimp	Gold	Nickel	Polyethelene	Commercial	**33.02** 1.300	58425-1	—	**5413760-1**
BELDEN 8212, 9104, 9112, 9240, 9167, 9259, 9266, Times FM-59, (RG 59 Type with 20 AWG C.C.)	Hex Crimp	Gold	Nickel	Polyethelene	Commercial	**33.02** 1.300	58425-1	—	**5413760-9**
BELDEN 9248, 9114	O Crimp	Gold	Nickel	Polyethelene	Commercial	**30.48** 1.200	58536-1	—	**5221199-1**

BELDEN is a trademark of Belden Wire and Cable Company.

Note: Part Numbers are RoHS compliant except: ♦ Indicates non-RoHS compliant.

BNC Connectors, 75 Ohm (Continued)

Bulkhead Jacks, Crimp

Hex and O Crimp

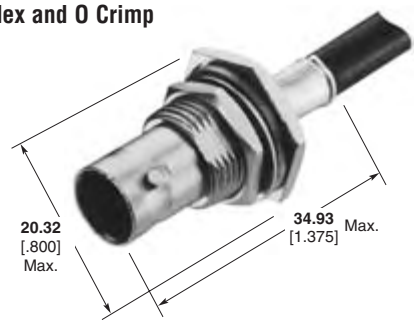

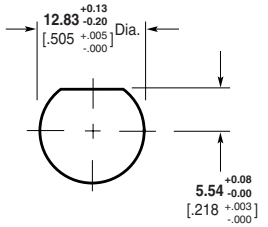

Maximum Panel Thickness **6.1** [.240]

Recommended Panel Cutout

RG/U Cable	Termination Type	Center Contact Plating	Body Plating	Dielectric	Style	Dim. L	Interchangeable Dies for PRO-CRIMPER Hand Tool 354940-1 or PRO-CRIMPER Adapter 679304-1	Interchangeable Dies for Hand Tool 69710-1 & 626 Pneu. Head 318161-1	Part No.
179, 179A, 179B, 161, 187, 187A, BELDEN 9221	Hex Crimp	Gold	Nickel	Polyethelene	Commercial	**36.83** 1.450	58425-2	—	**5413590-8**
	O Crimp	Gold	Nickel	Polyethelene	Commercial	**34.93** 1.375	318451-2	—	**5221221-5**
AT&T KS 19224 L2, RD179 Double Braid	Hex Crimp	Gold	Nickel	Polyethelene	Commercial	**36.83** 1.450	58425-2	—	**5413590-4**
BELDEN 8218	Hex Crimp	Gold	Nickel	Polyethelene	Commercial	**36.83** 1.450	58425-2	—	**5413590-3**
140, 210, 62, 62A, 62B, 59, 59A, 59B, BELDEN 9291, 9209, 9269	O Crimp	Gold	Nickel	Polyethelene	Commercial	**34.93** 1.375	58536-1	58248-2	**5221221-2**
BELDEN 8212, 9104, 9112, 9240, 9167, 9259, 9266, Times FM-59 (RG 59 Type with 20 AWG C.C.)	O Crimp	Gold	Nickel	Polyethelene	Commercial	**34.93** 1.375	58536-1	58248-2	**5221221-7**
BELDEN 9114, 9248	O Crimp	Gold	Nickel	Polyethelene	Commercial	**34.93** 1.375	58536-1	—	**5221221-1**

AT&T is a trademark of AT&T Corporation.
BELDEN is a trademark of Belden Wire and Cable Company.

Note: Part Numbers are RoHS compliant except: ♦ Indicates non-RoHS compliant.

BNC Connectors, 75 Ohm (Continued)

Bulkhead Solder Jacks Front Mount

Plating

Body — Nickel
Center Contact — Silver

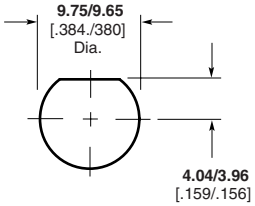

Maximum Panel Thickness **3.18** [.125]

Recommended Panel Cutout

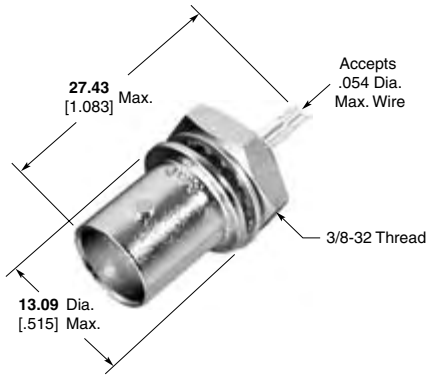

Part No. 5415187-1

(without Solder Terminal)

Note: If insulating bushing required use part no. 227223-1 or 221951-1 (for details, reference page 55).

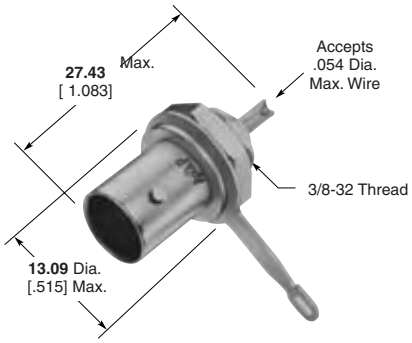

Part No. 5221244-1

(with Solder Terminal)

Note: If insulating bushing required use part no. 227223-1 or 221951-1 (for details, reference page 55).

Bulkhead Jack PC Board Mount

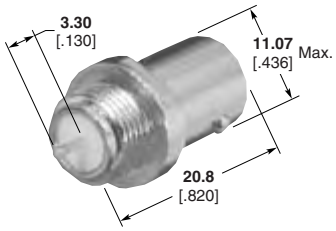

Part No. 6274086-1

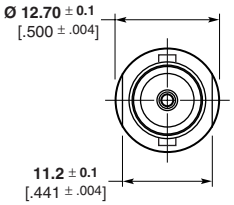

Bulkhead Solder Jack Rear Mount

Lockwasher and Jam Nut see page 73.

Plating

Body — Nickel
Center Contact — Gold
Dielectric — Polymethylpentene

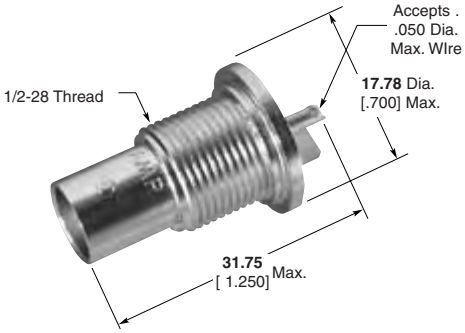

Part No. 5414217-1

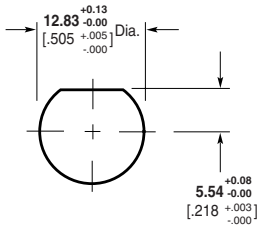

Maximum Panel Thickness **6.35** [.250]

Recommended Panel Cutout

Note: Part Numbers are RoHS compliant except: ♦ Indicates non-RoHS compliant.

Catalog 1307191
Revised 3-07

www.tycoelectronics.com

Dimensions are in millimeters and inches unless otherwise specified. Values in brackets are standard equivalents.

Dimensions are shown for reference purposes only. Specifications subject to change.

USA: 1-800-522-6752
Canada: 1-905-470-4425
Mexico: 01-800-733-8926
C. America: 52-55-1106-0803

South America: 55-11-2103-6000
Hong Kong: 852-2735-1628
Japan: 81-44-844-8013
UK: 44-8706-080-208

BNC Connectors, 75 Ohm (Continued)

Right-Angle Jacks PC Board/Panel Mount

Outer Shell — Nickel
Dielectric — Polymethylpentene
Lockwasher and Jam Nut see page 73.

VALOX Body

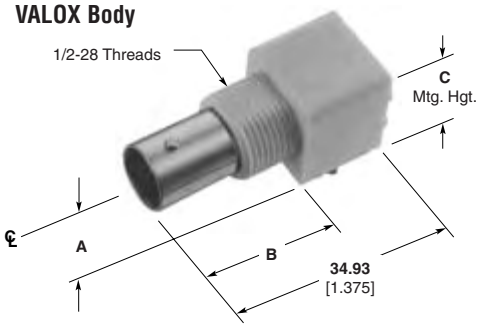

Metal Body

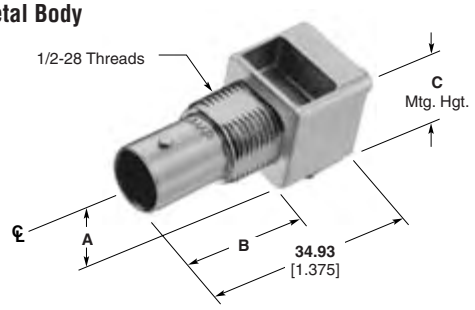

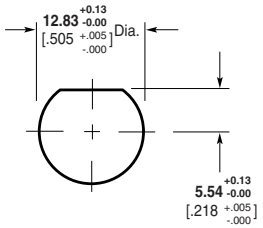

Maximum Panel Thickness **6.1** [.240]

Recommended Panel Cutout

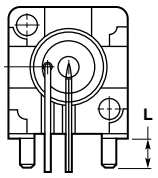

Body Material	Center Contact Plating	Dimensions A	B	C	L	Part No. Without Mounting Posts	With Mounting Posts
VALOX, Black w/ Compliant Posts (Economy)*	Gold3	**6.17** .243	**21.21** .835	**11.68** .460	**2.79** .110	—	**5415105-2**
VALOX, Black (Economy)*	Gold3	**6.17** .243	**21.21** .835	**11.68** .460	**4.01** .158	—	**5415105-1**
VALOX, White	Gold1	**6.91** .272	**21.21** .835	**13.88** .519	**3.48** .137	—	**5413194-1**
VALOX, White (Economy)*	Gold1	**6.91** .272	**21.21** .835	**13.88** .519	**3.48** .137	—	**5415634-2**
VALOX, Black	Gold1	**6.91** .272	**21.21** .835	**13.88** .519	**3.48** .137	—	**5413194-2**
VALOX, Black (Economy)*	Gold1	**6.91** .272	**21.21** .835	**13.88** .519	**3.48** .137	—	**5415634-1**
	Gold1	**8.59** .338	**21.21** .835	**15.88** .625	**3.48** .137	—	**5415633-1**
VALOX, White	Gold2	**8.59** .338	**21.21** .835	**15.88** .625	**3.48** .137	—	**5414459-1**
Metal	Gold1	**8.25** .325	**20.83** .820	**15.88** .625	**2.16** .085	—	**5222092-1**
Metal	Gold1	**8.25** .325	**20.83** .820	**15.88** .625	—	**5222093-1**	—
Metal (Economy)*	Gold1	**8.25** .325	**20.83** .820	**15.88** .625	**3.48** .137	—	**5414409-1**
Metal with Compliant Posts (Economy)*	Gold1	**6.91** .272	**20.83** .820	**12.70** .500	**3.48** .137	—	**5415417-1**
	Tin	**8.56** .337	**21.21** .835	**15.88** .625	**3.48** .137	—	**5415419-1**
Metal	Gold1	**8.25** .325	**20.83** .820	**15.88** .625	**3.48** .137	—	**5222092-3**
Metal	Gold1	**6.91** .272	**20.83** .820	**12.70** .500	**3.48** .137	—	**5414907-1**
Metal	Gold1	**6.91** .272	**20.83** .820	**12.70** .500	—	**6274072-1**	—
Metal (Economy)*	Gold1	**6.91** .272	**20.83** .820	**12.70** .500	**3.48** .137	—	**6274084-1**

*Economy connector uses 50 Ω part with smaller dielectric and stamped and formed contact, Phosphor Bronze contact material (Compare to regular connector which is 75 Ω, screw machined Beryllium Copper).

Plating:
Gold1 — 0.00076 [.000030] thick
Gold2 — 0.00127 [.000050] thick
Note: If an Insulating Bushing is required see part number 330620 and Panel Cutout on page 54.

Recommended PC Board Layouts

Without Mounting Posts

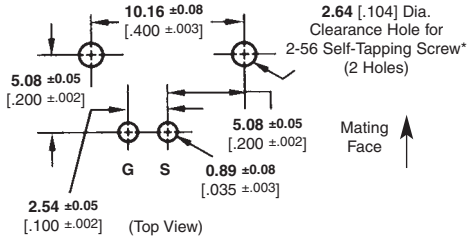

With Mounting Posts

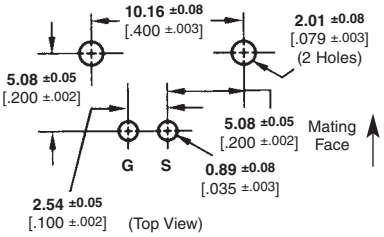

* Screw for panel thickness of **2.38** [3/32] or greater
Part No. 221108-2.
Screw for panel thickness of less than **2.38** [3/32]
Part No. 221108-4.

VALOX is a trademark of General Electric Company.

Note: Part Numbers are RoHS compliant except: ♦ Indicates non-RoHS compliant.

Catalog 1307191
Revised 3-07

www.tycoelectronics.com

Dimensions are in millimeters and inches unless otherwise specified. Values in brackets are standard equivalents.

Dimensions are shown for reference purposes only. Specifications subject to change.

USA: 1-800-522-6752
Canada: 1-905-470-4425
Mexico: 01-800-733-8926
C. America: 52-55-1106-0803

South America: 55-11-2103-6000
Hong Kong: 852-2735-1628
Japan: 81-44-844-8013
UK: 44-8706-080-208

BNC Connectors, 75 Ohm (Continued)

Vertical Jacks
PC Board/Panel Mount

Plating

Outer Shell — Nickel
Dielectric — Polymethylpentene

VALOX Body

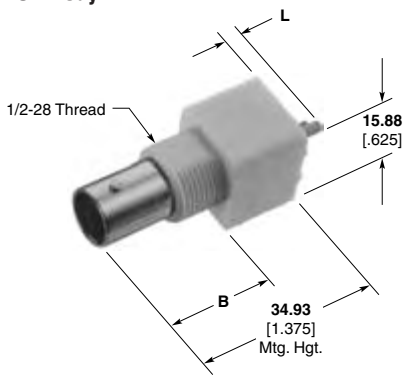

Metal Body

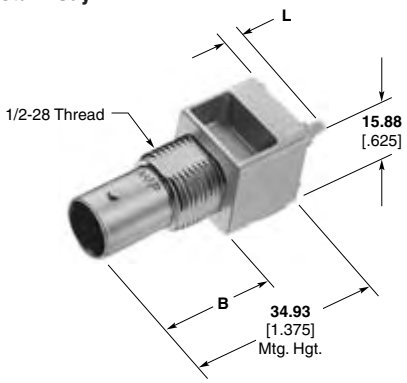

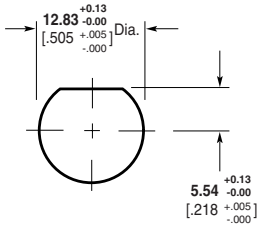

Maximum Panel Thickness **6.1** [.240]

Recommended Panel Cutout

Body Material	Contact Plating	Dim. B	Dim. L	Part No.
VALOX, Black (Economy)*	Gold1	**21.21** .835	**3.48** .137	**5415632-1**
VALOX, White (Economy)*	Gold1	**21.21** .835	**3.48** .137	**5415632-2**
Metal	Gold1	**20.83** .820	**3.48** .137	**5222132-1**
Metal (Economy)*	Tin	**21.21** .835	**3.48** .137	**5415520-1**

*Economy connector uses 50 Ω part with smaller dielectric and stamped and formed contact, Phosphor Bronze contact material (Compare to regular connector which is 75 Ω, screw machined Beryllium Copper).

Plating:
Gold1 — 0.00076 [.000030] thick

Note: If an Insulating Bushing is required see part number 330620 and Panel Cutout on page 54.

Lockwasher and Jam Nut



Part No. 1-329632-2



Part No. 1-329631-2

* Screw for panel thickness of **2.38** [3/32] or greater
Part No. 221108-2.
Screw for panel thickness of less than **2.38** [3/32]
Part No. 221108-4.

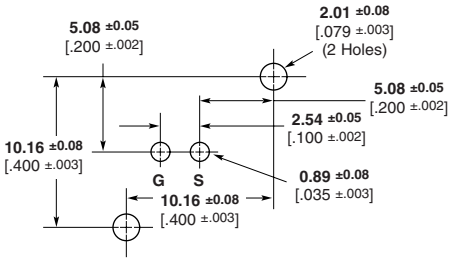

(Top View)

Recommended PC Board Layout

VALOX is a trademark of General Electric Company.

Note: Part Numbers are RoHS compliant except: ♦ Indicates non-RoHS compliant.

Catalog 1307191
Revised 3-07

www.tycoelectronics.com

Dimensions are in millimeters and inches unless otherwise specified. Values in brackets are standard equivalents.

Dimensions are shown for reference purposes only. Specifications subject to change.

USA: 1-800-522-6752
Canada: 1-905-470-4425
Mexico: 01-800-733-8926
C. America: 52-55-1106-0803

South America: 55-11-2103-6000
Hong Kong: 852-2735-1628
Japan: 81-44-844-8013
UK: 44-8706-080-208

BNC Connectors, 75 Ohm (Continued)

Vertical Metalized Jacks PC Board Mount

Plating
Dielectric — PTFE

Style A

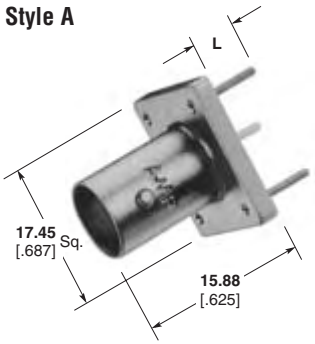

Style B



Style C

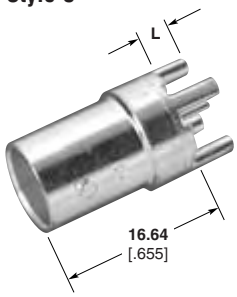

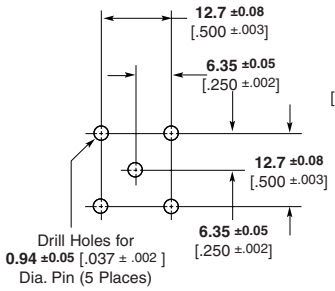

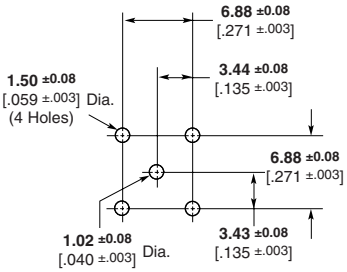

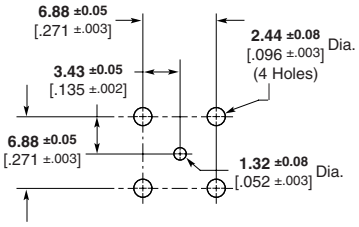

Recommended PC Board Layout

Style F (Push-On)

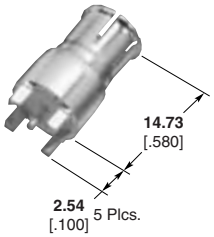

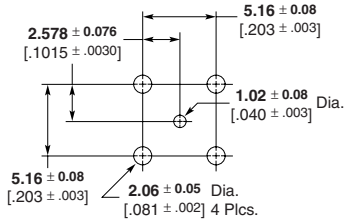

Body Plating	Center Contact Plating	Style	Leg Length L	Part No.
Nickel	Gold	B	3.30 .130	6274291-2
Tin	Gold	B	3.30 .130	6274291-1
Tin	Gold	B	6.35 .250	6274359-1
Tin	Gold	C	4.44 .175	5414394-1
Nickel	Silver	A	6.35 .250	5413986-1
Tin	Gold	F	2.54 .100	6274360-1

Press Fit Vertical Metalized Jacks PC Board Mount

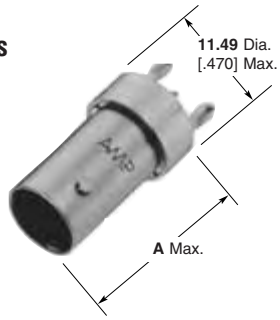

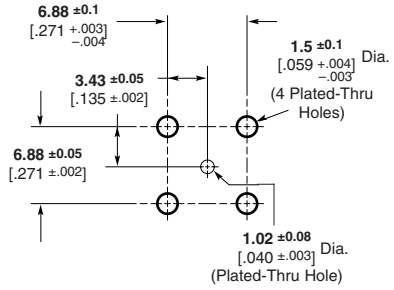

Recommended PC Board Layout

Dim. A	Part No.
20.57 .810	5222462-1
16.26 .640	5414088-1

Insulating Bushing

Material — Nylon
Part No. 222163-1
Only to be used on Part Nos. 5222462-1 and 5222006-1

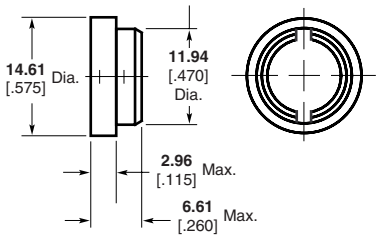

Note: Part Numbers are RoHS compliant except: ♦ Indicates non-RoHS compliant.

Catalog 1307191
Revised 3-07

www.tycoelectronics.com

Dimensions are in millimeters and inches unless otherwise specified. Values in brackets are standard equivalents.

Dimensions are shown for reference purposes only. Specifications subject to change.

USA: 1-800-522-6752
Canada: 1-905-470-4425
Mexico: 01-800-733-8926
C. America: 52-55-1106-0803

South America: 55-11-2103-6000
Hong Kong: 852-2735-1628
Japan: 81-44-844-8013
UK: 44-8706-080-208

BNC Connectors, 75 Ohm (Continued)

Press Fit Vertical Metalized Jacks PC Board Mount (Continued)

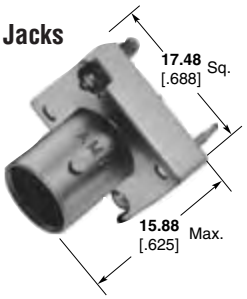

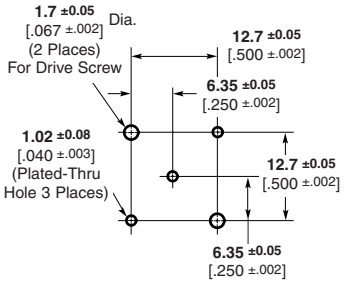

Recommended PC Board Layout

PC Board Thickness (Min.)	Part No.
2.36 .093	5221336-3
3.17 .125	5221336-4

Press Fit, Bulkhead Vertical Metalized Jack

includes hardware

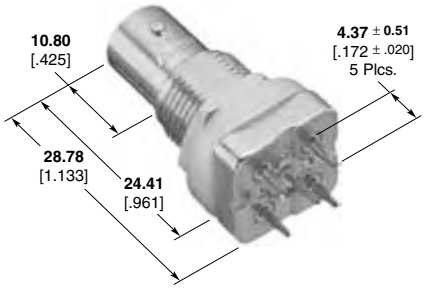

Part No. 6274124-2

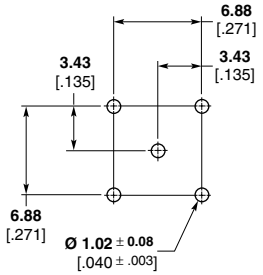

Holes Plated Through 5 Plcs.

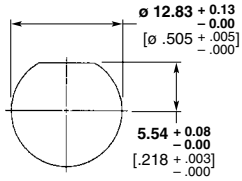

Recommended PC Board Layout

Right-Angle Metalized Jacks PC Board Mount

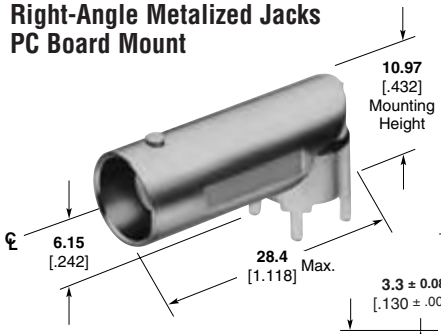

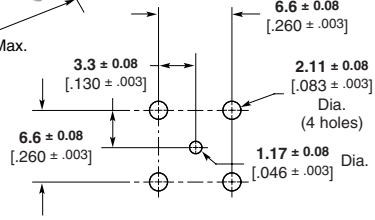

Maximum PC Board Thickness **2.54** [.100]

Recommended PC Board Layout

Body Plating	Dielectric	Contact Plating	Center Contact Dimension	Part No.
Nickel	TPX	Gold2	.171 [.007]	**5413558-1**
Tin	PTFE	Gold2	.171 [.007]	**5413558-2**
Nickel	TPX	Gold2	.131 [.005]	**5413558-3**
Nickel	TPX	Gold1	.171 [.007]	**5413558-5**

Gold1 — 0.00076 [.000030] thick
Gold2 — 0.00127 [.000050] thick

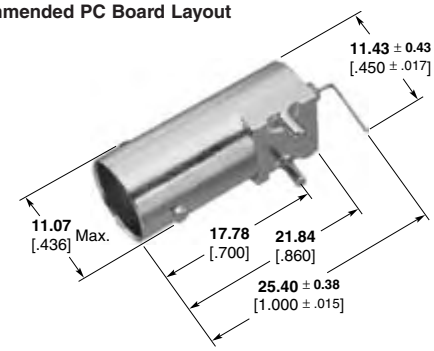

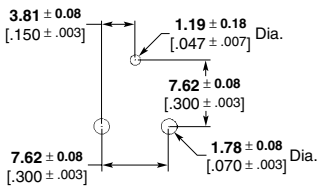

Part No. 6274127-1

TPX is a trademark of Mitsui Chemicals America, Inc.

Note: Part Numbers are RoHS compliant except: ♦ Indicates non-RoHS compliant.

Catalog 1307191
Revised 3-07

www.tycoelectronics.com

Dimensions are in millimeters and inches unless otherwise specified. Values in brackets are standard equivalents.

Dimensions are shown for reference purposes only. Specifications subject to change.

USA: 1-800-522-6752
Canada: 1-905-470-4425
Mexico: 01-800-733-8926
C. America: 52-55-1106-0803

South America: 55-11-2103-6000
Hong Kong: 852-2735-1628
Japan: 81-44-844-8013
UK: 44-8706-080-208

BNC Connectors, 75 Ohm (Continued)

Right-Angle Metalized Jacks PC Board/Panel Mount

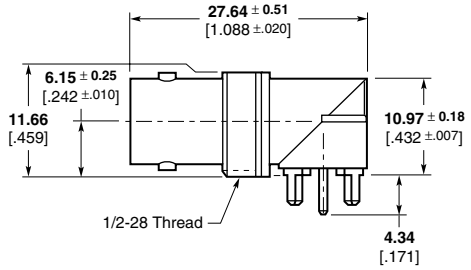

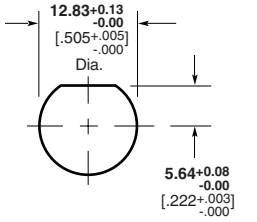

Maximum Panel Thickness **6.35** [.250]
Recommended Panel Cutout

Body Plating	Dielectric	Part No.
Tin	PTFE	**6274425-2**

Bulkhead Jack-Jack Adapter

Plating

Body — Nickel
Center Contact — Gold
Dielectric — Polymethylpentene

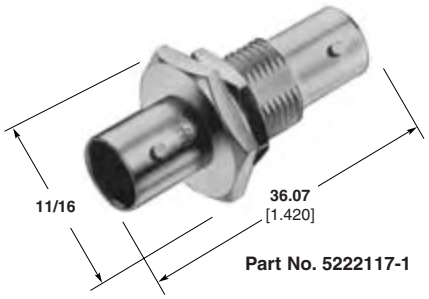

Part No. 5222117-1

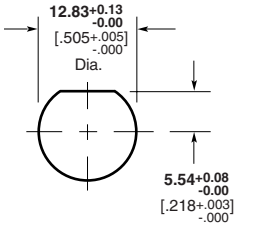

Maximum Panel Thickness **6.35** [.250]
Recommended Panel Cutout

Right-Angle Adapter
(Jack-Plug)

Plating

Body — Nickel
Center Contact — Gold
Dielectric — Polymethylpentene

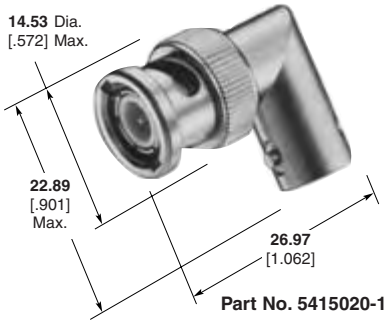

Part No. 5415020-1

Bulkhead Jack-Jack Adapter

Plating

Body — Nickel
Center Contact — Gold
Dielectric — Polymethylpentene

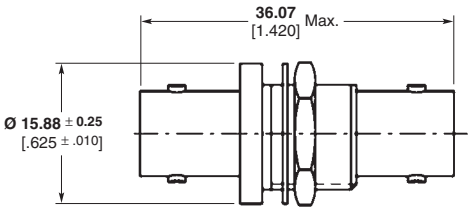

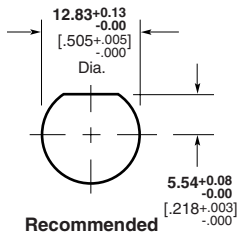

Recommended Panel Cutout

Part No. 1274935-1

Jack-Jack Adapter

Plating

Body — Nickel
Center Contact — Gold
Dielectric — Polymethylpentene

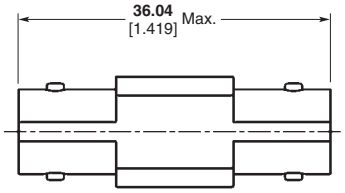

Part No. 415567-1

Note: Part Numbers are RoHS compliant except: ♦ Indicates non-RoHS compliant.

Catalog 1307191
Revised 3-07

www.tycoelectronics.com

Dimensions are in millimeters and inches unless otherwise specified. Values in brackets are standard equivalents.

Dimensions are shown for reference purposes only. Specifications subject to change.

USA: 1-800-522-6752
Canada: 1-905-470-4425
Mexico: 01-800-733-8926
C. America: 52-55-1106-0803

South America: 55-11-2103-6000
Hong Kong: 852-2735-1628
Japan: 81-44-844-8013
UK: 44-8706-080-208

BNC Connectors, 75 Ohm (Continued)

Bulkhead Jack-Push On Plug Adapter

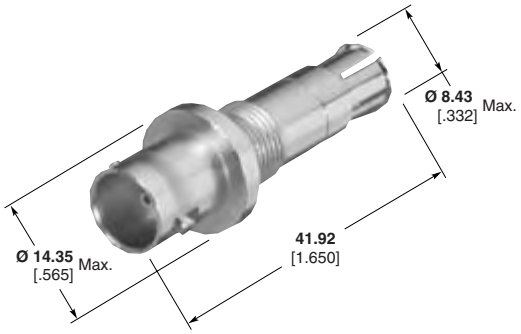

Part No. 1274007-1

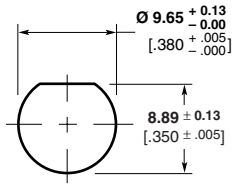

Recommended Panel Cutout

Note: Part Numbers are RoHS compliant except: ♦ Indicates non-RoHS compliant.

Catalog 1307191
Revised 3-07

www.tycoelectronics.com

Dimensions are in millimeters and inches unless otherwise specified. Values in brackets are standard equivalents.

Dimensions are shown for reference purposes only. Specifications subject to change.

USA: 1-800-522-6752
Canada: 1-905-470-4425
Mexico: 01-800-733-8926
C. America: 52-55-1106-0803

South America: 55-11-2103-6000
Hong Kong: 852-2735-1628
Japan: 81-44-844-8013
UK: 44-8706-080-208

Mini BNC Connectors, 75 Ohm

Product Facts

- **Bayonet locking coupling mechanism**
- **40% more interconnects in the same area**
- **Compatible with TROMPETER tooling**
- **Ideal for telecommunications and broadband applications**



Tyco Electronics introduces the Mini BNC series of RF connectors to meet the growing demand for next generation telecommunications and broadband applications where higher connector densities are needed. Preserving the characteristics that have made the standard BNC so popular, the Mini BNC offers the same high performance currently found in standard Tyco Electronics BNC series, but offers 40% more interconnects in the same area.

The Mini BNC offering is an excellent fit for 75 Ohm systems, offering 500 mating cycles, electrical performance through 2 GHz, and is completely intermateable with competitive miniature BNC offerings. Tyco Electronics' Mini BNC product offers the same advantage of the bayonet locking mechanism as our standard BNC, allowing quicker connect and disconnects than standard threaded interfaces. It uses standard BNC installation tooling meaning there is no need for retraining of field telco installers, and it utilizes the same PCB footprint on the jack side, providing a drop in replacement for DS3 telco applications.

Mini BNC connector configurations currently available include PCB, panel mount, and flexible cable. Other options can be reviewed as well, including additional cable sizes, adapters, PCB surface mounting, and tape and reel packaging. Call your local sales office or authorized distributor for additional information or samples of the Mini BNC connector series.

Tyco Electronics is a leading supplier of RF and Microwave connectors and cable assemblies, and provides advanced technology products from well known and industry leading brands, including AMP and M/A-COM.

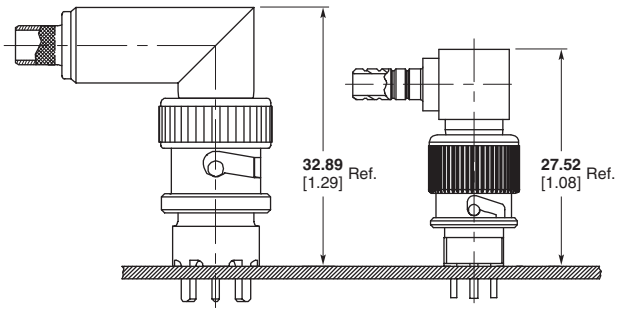

Material and Finish

Shells, Bodies, Mtg Nuts — Brass, nickel plated

Washers — Stainless Steel, nickel plated

Ferrule — Copper or Brass, tin plated

Center Contacts — Phos Bronze and Brass, gold plated

Dielectrics — PTFE

Electrical Characteristics

Frequency — DC – 2 GHz

Nominal Impedance — 75 ohms

Voltage Rating — 300 Volts (VRMS maximum) @ Sea Level

VSWR —
1.10 max to 500 MHz
(Return Loss -26.4 dB)
1.16 max to 1 GHz
(Return Loss -22.6 dB)

Insulation Resistance —
1,000 megohms minimum

Dielectric Withstanding Voltage —
1,000 Volts (VRMS maximum) @ Sea Level

Contact Resistance —
12 milliohms maximum

Mechanical Characteristics

Connector Durability —
500 mating cycles

Force to Engage —
7 pounds maximum

Force to Disengage —
1 pound minimum

Center Contact Retention —
2 pounds minimum

Cable Retention —
20 pounds minimum

Vibration — EIA-364-28, Test Condition VII, Condition D

Shock — EIA-364-27, Method H

Environmental Characteristics

Temperature Rating —
–40 to +85°C

Moisture Resistance — EIA-364-31, Method II, Condition C

Thermal Shock — EIA-364-32

Note: Performance specifications are typical, but may not apply to all connector types.

Related Product Data

Product Specification — 108-2159

Sample Kit — 1773042

TROMPETER is a trademark of Trompeter Electronics, Inc.

Catalog 1307191
Revised 3-07

www.tycoelectronics.com

Dimensions are in millimeters and inches unless otherwise specified. Values in brackets are standard equivalents.

Dimensions are shown for reference purposes only. Specifications subject to change.

USA: 1-800-522-6752
Canada: 1-905-470-4425
Mexico: 01-800-733-8926
C. America: 52-55-1106-0803

South America: 55-11-2103-6000
Hong Kong: 852-2735-1628
Japan: 81-44-844-8013
UK: 44-8706-080-208

Mini BNC Connectors, 75 Ohm (Continued)

Interface Dimensions

Mini BNC Jack

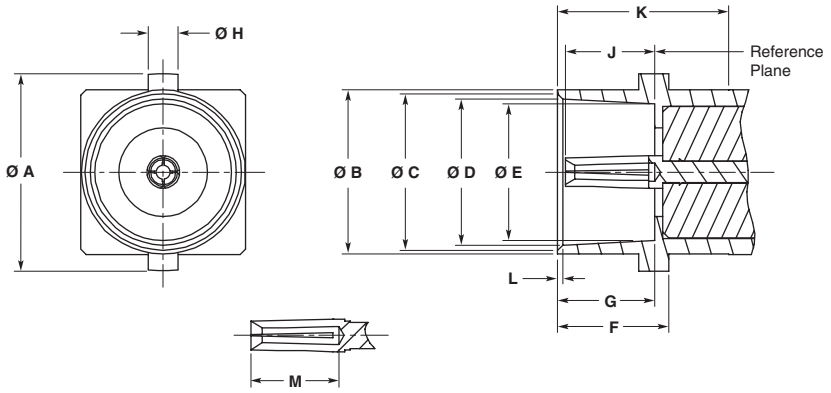

Dimensions											
A	B	C	D	E	F	G	H	J	K	L	M
8.89–9.14 .350–.360	**7.37–7.62** .290–.300	**7.11–7.21** .280–.284	**6.63–6.73** .261–.265	**6.20–6.30** .244–.248	**5.03–5.13** .198–.202	**4.39–4.50** .173–.177	**1.32–1.42** .052–.056	**3.86–4.27** .152–.168	**7.70** .303 Min.	**0.18–0.30** .007–.012	**4.01** .158 Min.

Mini BNC Plug

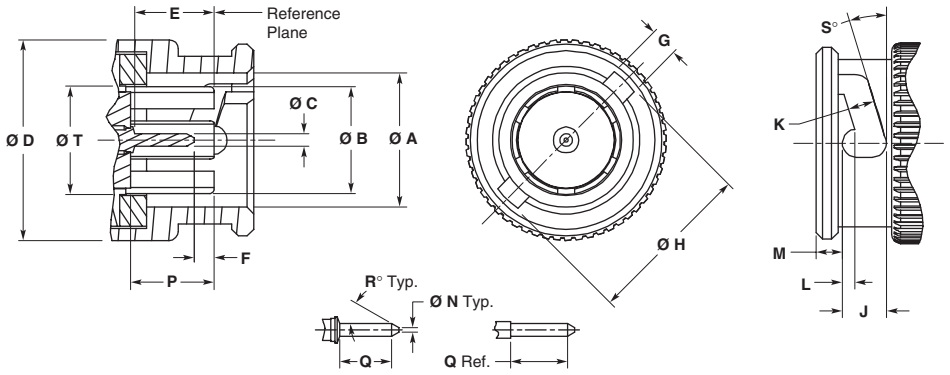

Contact Types

Dimensions								
A	B	C	D	E	F	G	H	J
7.70–7.80 .303–.307	—	**0.71–0.76** .028–.030	**11.43–11.68** .450–.460	**4.27–4.93** .168–.194	**0.94–1.35** .037–.053	**1.57–1.68** .062–.066	**9.60–9.70** .378–.382	**2.50–2.59** .098–.102

Dimensions								
K	L	M	N	P	Q	R	S	T
1.57–1.68 .062–.066	**0.64–0.74** .025–.029	**1.47–1.57** .058–.062	**0.20–0.30** .008–.012	**4.62–4.93** .182–.194	**2.84–3.38** .112–.133	29°–31°	14°–16°	**6.20–6.30** .244–.248

Catalog 1307191
Revised 3-07

www.tycoelectronics.com

Dimensions are in millimeters and inches unless otherwise specified. Values in brackets are standard equivalents.

Dimensions are shown for reference purposes only. Specifications subject to change.

USA: 1-800-522-6752
Canada: 1-905-470-4425
Mexico: 01-800-733-8926
C. America: 52-55-1106-0803

South America: 55-11-2103-6000
Hong Kong: 852-2735-1628
Japan: 81-44-844-8013
UK: 44-8706-080-208

Mini BNC Connectors, 75 Ohm (Continued)

Flexible Cable — Crimp Attachment

Straight Cable Plug



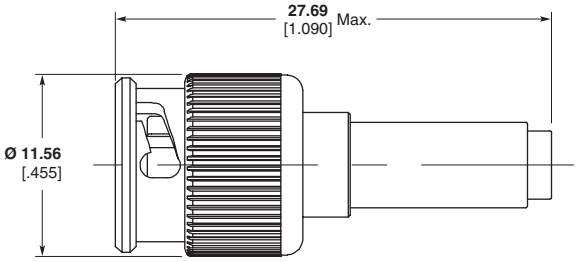

Cable	Part Number
735A	**1274563-1**
734A	**1274563-2**
RG 179	**1274563-3**

Right-Angle Cable Plug



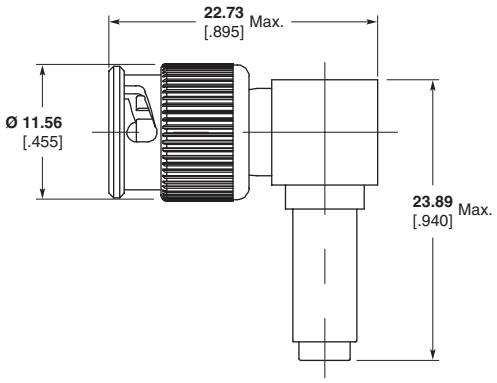

Cable	Part Number
735A	**1274566-1**
734A	**1274566-2**
RG 179	**1274566-3**

Bulkhead Cable Jack



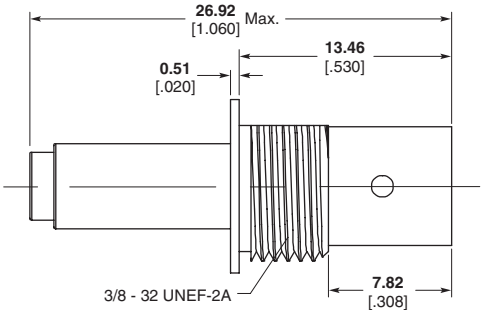

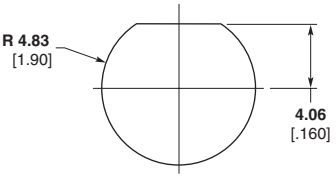

Recommended Panel Cutout
Tolerance: ± 0.08 [.003]

Cable	Part Number
735A	**1274568-1**
734A	**1274568-2**
RG 179	**1274568-3**

Note: Part Numbers are RoHS compliant except: ♦ Indicates non-RoHS compliant.

Catalog 1307191
Revised 3-07

www.tycoelectronics.com

Dimensions are in millimeters and inches unless otherwise specified. Values in brackets are standard equivalents.

Dimensions are shown for reference purposes only. Specifications subject to change.

USA: 1-800-522-6752
Canada: 1-905-470-4425
Mexico: 01-800-733-8926
C. America: 52-55-1106-0803

South America: 55-11-2103-6000
Hong Kong: 852-2735-1628
Japan: 81-44-844-8013
UK: 44-8706-080-208

Mini BNC Connectors, 75 Ohm (Continued)

Printed Circuit Board

Straight Jack Receptacle



Part Number
1274571-1

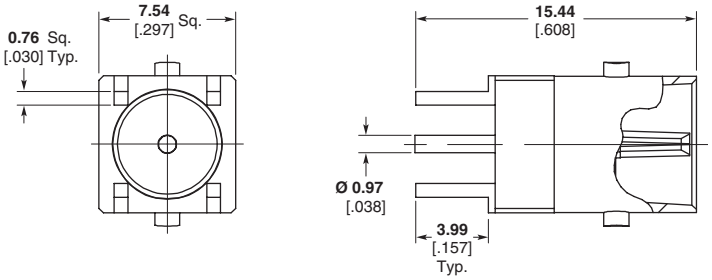

Right-Angle Jack Receptacle



Part Number
1274572-1

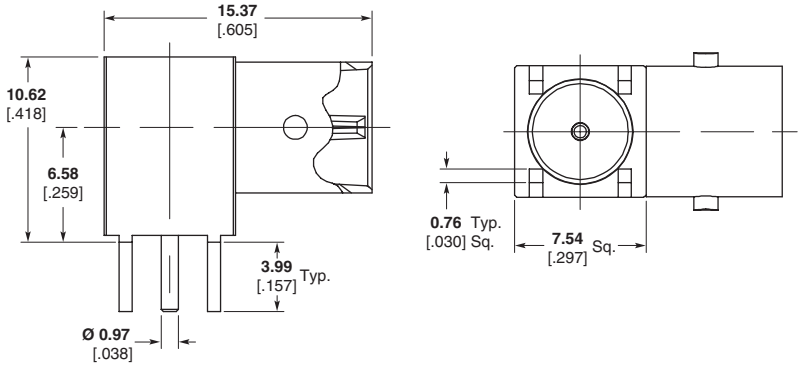

Right-Angle Bulkhead Jack Receptacle



Part Number
1274584-1

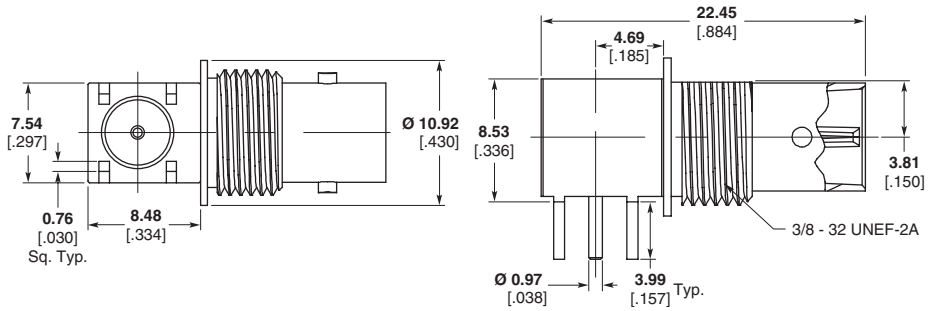

2 Position, Right-Angle, Bulkhead Jack Receptacle



Description	Part Number
With Hardware	1274663-2
Without Hardware	1274684-1

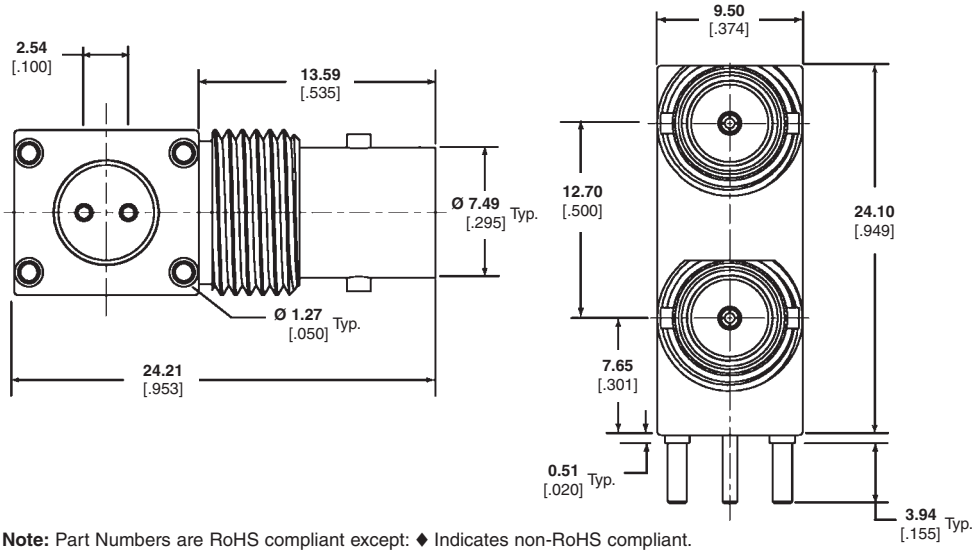

Note: Part Numbers are RoHS compliant except: ♦ Indicates non-RoHS compliant.

Catalog 1307191
Revised 3-07

www.tycoelectronics.com

Dimensions are in millimeters and inches unless otherwise specified. Values in brackets are standard equivalents.

Dimensions are shown for reference purposes only. Specifications subject to change.

USA: 1-800-522-6752
Canada: 1-905-470-4425
Mexico: 01-800-733-8926
C. America: 52-55-1106-0803

South America: 55-11-2103-6000
Hong Kong: 852-2735-1628
Japan: 81-44-844-8013
UK: 44-8706-080-208

Decoupled Connectors

Product Facts

- **Built-in chip capacitors filter high-frequency noise to panel ground**
- **PC board mounting with vertical and standard or low-profile right-angle configurations**
- **Cable mount bulkhead BNC version available**
- **Drop-in replacement for Tyco Electronics standard BNC printed circuit board connectors**
- **One-piece design and robotic capacity to reduce assembly time**



Tyco Electronics capacitively decoupled connectors provide the fast, better way to reduce noise and reduce ground loops on coaxial interconnections. The high-frequency noise generated by fast rise times can cause both false triggering of circuits as well as emissions that can be radiated or conducted outside the equipment. Such emissions can interfere with nearby equipment. Ground loops are also a problem for networked systems. Ground loops are caused when two interconnected units are at different voltage potentials.

The typical way to handle such EMI and ground loop problems is to decouple the cable shield from the ground panel by soldering a ceramic disk capacitor between the cable shield and the panel. The capacitor shunts high-frequency noise to ground. While effective, this approach is time consuming and expensive.

The Capacitively Decoupled connector has built-in chip capacitors. These capacitors establish the electrical contact between the outer shield and a clip. This clip provides a short electrical path between the capacitors and panel. As a result, high-frequency noise is effectively shunted to ground, while the DC path is blocked.

The connectors offer compatibility in design and manufacture. The same footprint and dimensional envelope make them a drop-in replacement for Tyco Electronics standard BNC or TNC printed circuit board connectors. In addition, they can be robotically picked and placed for high-speed automated assembly to pc boards.

Product Specification

108-1263 — BNC Decoupled PCB Press-Fit Connection

108-1269 — BNC Decoupled PCB Connectors

108-1490 — BNC Decoupled Cable Mount

Catalog 1307191
Revised 3-07

www.tycoelectronics.com

Dimensions are in millimeters and inches unless otherwise specified. Values in brackets are standard equivalents.

Dimensions are shown for reference purposes only. Specifications subject to change.

USA: 1-800-522-6752
Canada: 1-905-470-4425
Mexico: 01-800-733-8926
C. America: 52-55-1106-0803

South America: 55-11-2103-6000
Hong Kong: 852-2735-1628
Japan: 81-44-844-8013
UK: 44-8706-080-208

Decoupled Connectors (Continued)

PC Board/Panel Mount Jacks Decoupled to Panel

Material

Body — VALOX, black
Dielectric — Polymethylpentene

Note: Both styles are shown with a standard clip. See next page for other clip styles.

For height dimensions see chart on page 85.

Style A
Vertical BNC

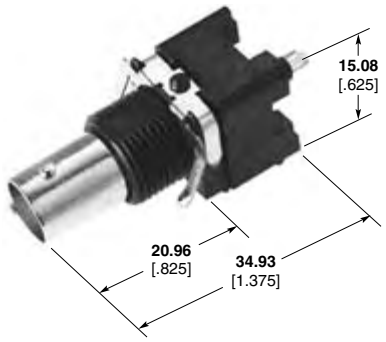

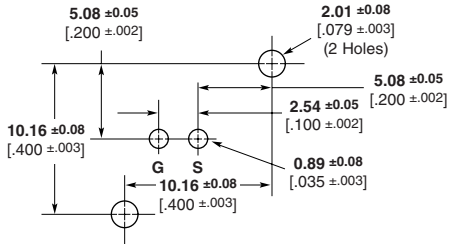

(Top View)

Recommended PC Board Layout

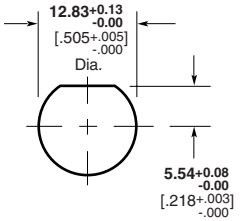

Maximum Panel Thickness **6.1** [.240]
Recommended Panel Cutout

Style B
Right-Angle BNC

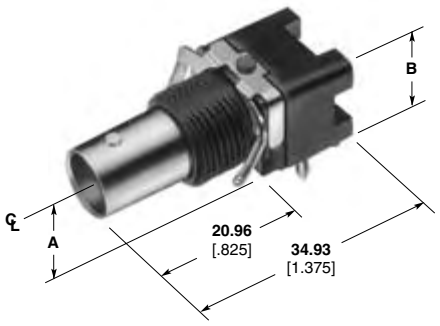

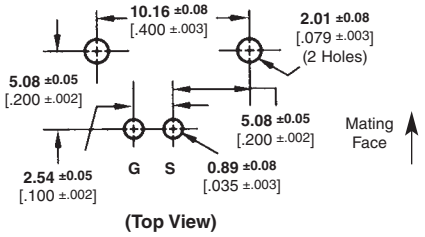

(Top View)

Recommended PC Board Layout

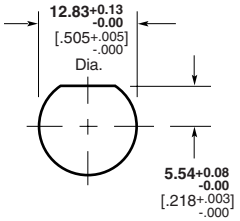

Maximum Panel Thickness **6.1** [.240]
Recommended Panel Cutout

VALOX is a trademark of General Electric Company.

Catalog 1307191
Revised 3-07

www.tycoelectronics.com

Dimensions are in millimeters and inches unless otherwise specified. Values in brackets are standard equivalents.

Dimensions are shown for reference purposes only. Specifications subject to change.

USA: 1-800-522-6752
Canada: 1-905-470-4425
Mexico: 01-800-733-8926
C. America: 52-55-1106-0803

South America: 55-11-2103-6000
Hong Kong: 852-2735-1628
Japan: 81-44-844-8013
UK: 44-8706-080-208

Decoupled Connectors (Continued)

Clip Styles

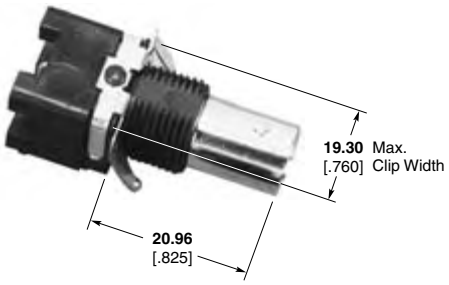

Standard

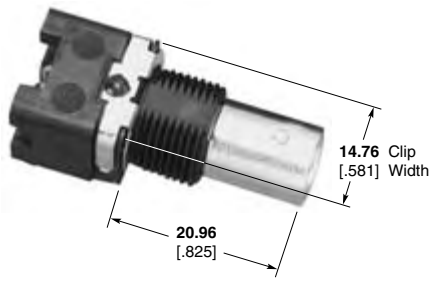

Flush
For closer centerline-to-centerline connector spacing

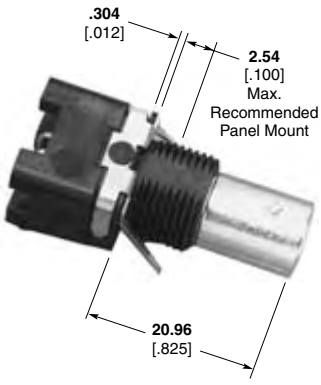

Extended
For use with or without a jam nut

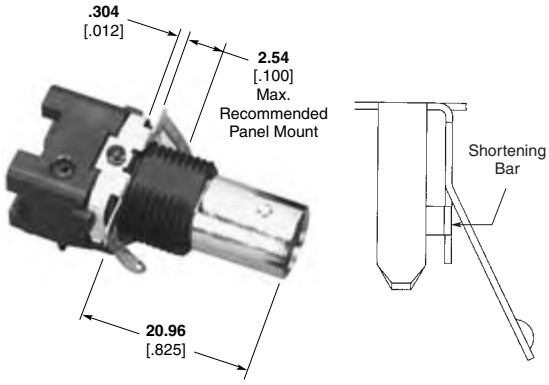

Short Electrical Path
For reduced series inductance in ground path

Catalog 1307191
Revised 3-07

www.tycoelectronics.com

Dimensions are in millimeters and inches unless otherwise specified. Values in brackets are standard equivalents.

Dimensions are shown for reference purposes only. Specifications subject to change.

USA: 1-800-522-6752
Canada: 1-905-470-4425
Mexico: 01-800-733-8926
C. America: 52-55-1106-0803

South America: 55-11-2103-6000
Hong Kong: 852-2735-1628
Japan: 81-44-844-8013
UK: 44-8706-080-208

Decoupled Connectors (Continued)

PC Board/Panel Mount Jacks Decoupled to Panel
(Continued)

Mounting Post Styles

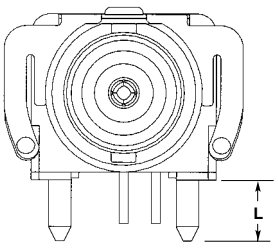

Standard

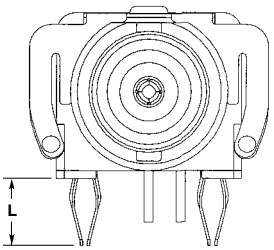

Compliant

BNC

Description	Capacitance/ Voltage	Clip	Mounting Post	L Mounting Post Length	B*	A*	Style[1]	Part No.
Vertical 50Ω	9400pF 1500VDC	Standard	Standard	**3.48** .137	—	—	A	**5413476-2**
Standard Right-Angle 50Ω	9400pF 1500VDC	Standard	Standard	**4.01** .158	**15.88** .625	**8.59** .338	B	**5413524-2**
	9400pF 1500VDC	Standard	Compliant	**2.79** .110	**15.88** .625	**8.59** .338	B	**5413524-5**
Standard Right-Angle W/O Mounting Post 50Ω[2]	9400pF 1500VDC	Standard	—	—	**15.88** .625	**8.59** .338	B	**5414215-1**
Low Profile Right-Angle 50Ω	9400pF 1500VDC	Standard	Standard	**4.01** .158	**13.18** .519	**6.91** .272	B	**5413515-2**
	20000pF 500VDC	Standard	Standard	**4.01** .158	**13.18** .519	**6.91** .272	B	**5413515-3**
	7900pF 1600VDC	Standard	Compliant	**2.79** .110	**13.18** .519	**6.91** .272	B	**5413515-7**
	9400pF 1500VDC	Standard	Compliant	**4.70** .185	**13.18** .519	**6.91** .272	B	**5413515-8**
	9400pF 1500VDC	Standard	Compliant	**2.79** .110	**13.18** .519	**6.91** .272	B	**5413515-9**
Low Profile Right-Angle W/Special Clip & High Temperature Housing 50Ω	9400pF 500VDC	Extended	Compliant	**2.79** .110	**13.18** .519	**6.91** .272	B	**5414284-2**
Low Profile Right-Angle W/High Temperature Housing 50Ω	9400pF 500VDC	Flush	Compliant	**4.70** .185	**13.18** .519	**6.91** .272	B	**5414352-1**
Low Profile Right-Angle 75Ω	9400pF 1500VDC	Standard	Standard	**4.01** .158	**13.18** .519	—	B	**5414094-2**
Ultra Low Profile Right-Angle 75 Ω	9400pF 1500VDC	Standard	Standard	**4.01** .158	**6.17** .243	**11.68** .460	—	**5415103-1**
	9400pF 1500VDC	Standard	Compliant	**2.79** .110	**6.17** .243	**11.68** .460	—	**5415103-2**

[1]See pages 83 and 84 for Connector Styles.
[2]See customer drawing for PC Board Layout.
*See page 83 for dimension reference.

Note: Part Numbers are RoHS compliant except: ♦ Indicates non-RoHS compliant.

Catalog 1307191
Revised 3-07

www.tycoelectronics.com

Dimensions are in millimeters and inches unless otherwise specified. Values in brackets are standard equivalents.

Dimensions are shown for reference purposes only. Specifications subject to change.

USA: 1-800-522-6752
Canada: 1-905-470-4425
Mexico: 01-800-733-8926
C. America: 52-55-1106-0803

South America: 55-11-2103-6000
Hong Kong: 852-2735-1628
Japan: 81-44-844-8013
UK: 44-8706-080-208

Decoupled Connectors (Continued)

Right-Angle BNC Jack PC Board/Panel Mount Decoupled to Panel ESD Protected

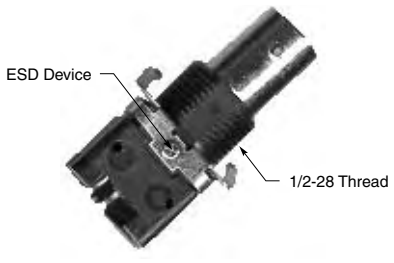

See page 83 Style B for panel cutout and recommended PC board configuration.

Note: See Tyco Electronics Customer drawing for voltage breakdown rating.

Description	Capacitance/ Voltage	Contact Plating	Clip	Mounting Post	L Mounting Post Length	B*	A*	Part No.
50Ω Product								
Low Profile Right-Angle W/ ESD Protection	7900pF 1500VDC	Gold1	Standard	Compliant	**2.79** .110	**13.18** .519	**6.91** .272	**5414651-3**
75Ω Product								
Standard Right-Angle W/ ESD Protection	9400pF 1500VDC	Gold1	Standard	Standard	**4.01** .158	**15.88** .625	**8.59** .338	**5415085-1**
Low Profile Right-Angle ESD Protected	9400pF 1500VDC	Gold1	Flush	Compliant	**2.79** .110	**13.18** .519	**6.91** .272	**5415216-1**

*See page 83 for dimension reference.

Right-Angle BNC Jack PC Board/Panel Mount Decoupled to Board ESD Protected

Capacitance	Voltage
9400pF	1500VDC

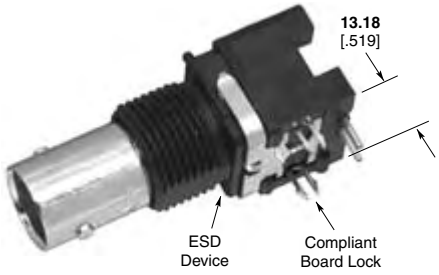

Part No. 5415205-1

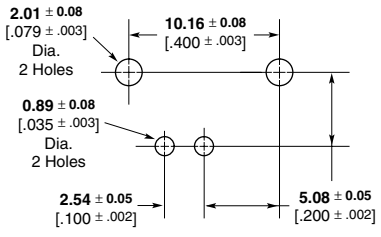

Recommended PC Board Layout

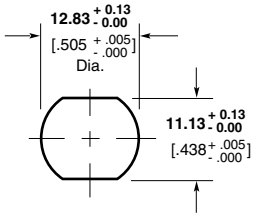

Recommended Panel Cutout

Note: Part Numbers are RoHS compliant except: ♦ Indicates non-RoHS compliant.

Catalog 1307191
Revised 3-07

www.tycoelectronics.com

Dimensions are in millimeters and inches unless otherwise specified. Values in brackets are standard equivalents.

Dimensions are shown for reference purposes only. Specifications subject to change.

USA: 1-800-522-6752
Canada: 1-905-470-4425
Mexico: 01-800-733-8926
C. America: 52-55-1106-0803

South America: 55-11-2103-6000
Hong Kong: 852-2735-1628
Japan: 81-44-844-8013
UK: 44-8706-080-208

Decoupled Connectors (Continued)

Press-Fit, Vertical BNC Jacks, PC Board Mount Decoupled to Board

Material

Dielectric—PTFE
Isolation Pad—Polyester

Plating

Body—Nickel
Ground Clip—Nickel
Center Contact—Gold
Action Pin Legs—Gold

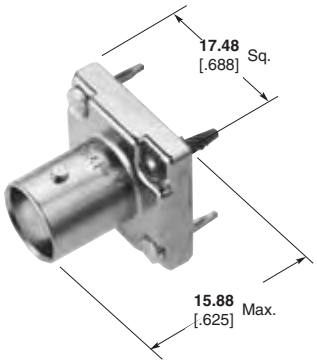

Part No. 5414553-1 50 Ohm
Part No. 5414493-4 75 Ohm

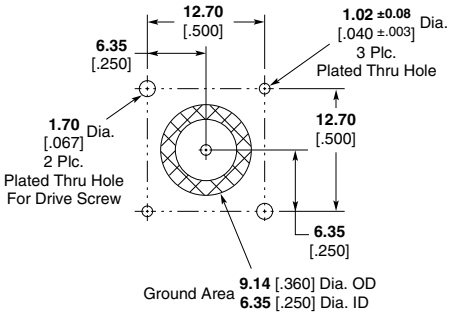

Recommended PC Board Layout

BNC Bulkhead Jacks, Crimp

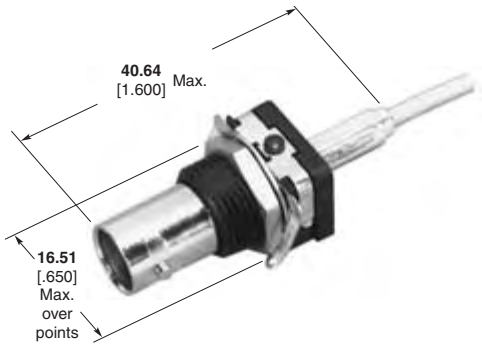

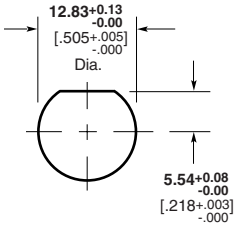

Recommended Panel Cutout

Description	RG/U Cable	Termination Type	Center Contact Plating	Body Plating	Dielectric	Style	Interchangeable Dies for Hand Tool 69710-1 & 626 Pneu. Head 318161-1	Part No.
50Ω	RG 58, 58A, 58B, 58C	Hex Crimp	Gold	Nickel	Polymethylpentene	Commercial	58436-1	**5414758-1**
50Ω	RG 174, 174A, 316, 188, 188A	Hex Crimp	Gold	Nickel	Polymethylpentene	Commercial	58436-3	**5414758-2**
50Ω	RG 174, 174A, 316, 188, 188A	Hex Crimp	Gold	Nickel	Polymethylpentene	Commercial	58436-3	**5414758-3**
75Ω ESD	RG 179, 187	Hex Crimp	Gold	Nickel	Polymethylpentene	Commercial	58425-2	**5415779-1**

Note: Part Numbers are RoHS compliant except: ♦ Indicates non-RoHS compliant.

Catalog 1307191
Revised 3-07

www.tycoelectronics.com

Dimensions are in millimeters and inches unless otherwise specified. Values in brackets are standard equivalents.

Dimensions are shown for reference purposes only. Specifications subject to change.

USA: 1-800-522-6752
Canada: 1-905-470-4425
Mexico: 01-800-733-8926
C. America: 52-55-1106-0803

South America: 55-11-2103-6000
Hong Kong: 852-2735-1628
Japan: 81-44-844-8013
UK: 44-8706-080-208

Self-Terminating PC Board Connectors

Product Facts

- **Built-in chip resistor terminates the signal line to the proper characteristic impedance when in the unmated state**
- **Can be ordered with standard resistance values (50, 75 and 100 Ohms)**
- **Fits into printed circuit board footprint of standard BNC PCB connectors**
- **One-piece design is compatible with robotic insertion and wave soldering**

Tyco Electronics Self-Terminating printed circuit board BNC connectors provide the capability to automatically terminate an input-output port to the system characteristic impedance. This feature eliminates the need for external terminators when an I/O port is not being used. The Self-Terminating BNC jack contains a chip resistor which bridges the signal and ground paths when the connector is not mated to a BNC plug. When mated, the resistor is switched out of the circuit for direct signal transmission to the board.

The footprint of this connector is compatible with standard BNC connectors, allowing it to be easily installed into existing circuit board designs and suitable for robotic insertion for high speed automated assembly onto the PC board.

The Self-Terminating BNC is available in standard resistance values for use in networking and video systems. Contact Tyco Electronics for new designs that include switching and capacitively decoupled versions.

Material

Body — Polyester, PBT, black
Dielectric — Polyester, PBT, natural

Plating

Shell — Tin
Center Contact — Gold on mating end and Tin on solder tails

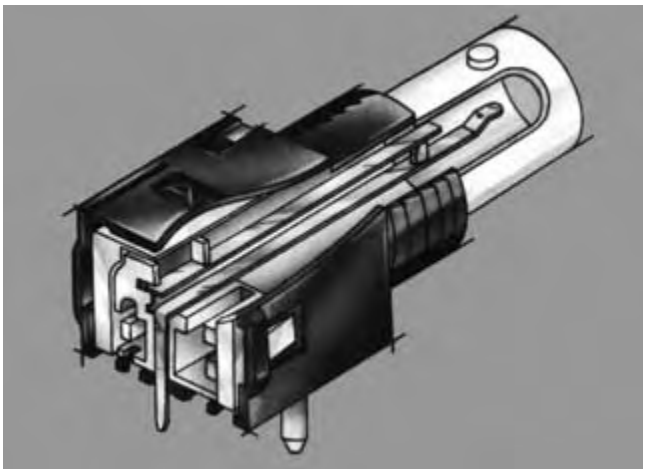

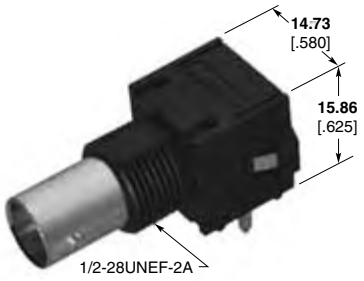

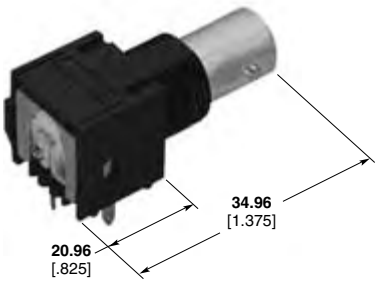

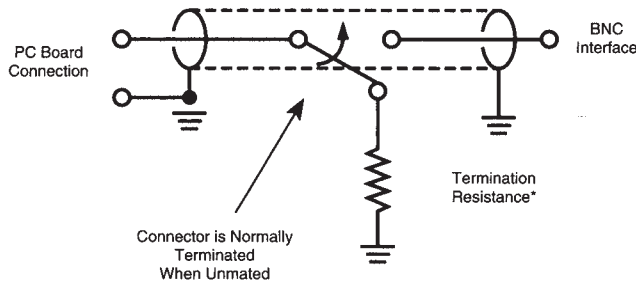

Product	Termination Resistance	Part Number
Self-Terminating BNC PCB	75Ω	**5414367-2**

Note: Part Numbers are RoHS compliant except: ♦ Indicates non-RoHS compliant.

Catalog 1307191
Revised 3-07

www.tycoelectronics.com

Dimensions are in millimeters and inches unless otherwise specified. Values in brackets are standard equivalents.

Dimensions are shown for reference purposes only. Specifications subject to change.

USA: 1-800-522-6752
Canada: 1-905-470-4425
Mexico: 01-800-733-8926
C. America: 52-55-1106-0803

South America: 55-11-2103-6000
Hong Kong: 852-2735-1628
Japan: 81-44-844-8013
UK: 44-8706-080-208

Twin BNC Connectors

Product Facts

- **Crimp connectors require only one-stroke crimping of both conductors, plus braid and cable support**
- **Lower installed cost with one-stroke crimp**
- **Reduced noise levels because of Tyco Electronics solderless crimping techniques**
- **Captive inner contact stability**
- **No danger of heat damage to coaxial cable**
- **Ease of inspection**
- **Listed under the Component Program of Underwriters Laboratories Inc., File No. E81956**
- **PC Board soldered connectors are recognized under the Component Program of Underwriters Laboratories Inc., File No. E81956**
- **Certified by Canadian Standards Association File No. LR 7189**

Packaging — All connectors are packaged individually unless otherwise noted.

The Twin BNC Connector is a quick connect/disconnect, weatherproof connector designed in accordance with MIL-C-39012 to meet the stringent requirements of MIL-STD-1553 Multiplex Data Bus.

These twin coaxial cable connectors are a unique development by Tyco Electronics which has resulted in the production of high level RF components. Termination of these connectors to twin conductor cable is made with Tyco Electronics exclusive one crimp method which simultaneously terminates inner conductors, outer braid and cable support with one stroke of the matching Tyco Electronics tool.

These rugged connectors accommodate today's most commonly used twin conductor cable sizes.

Materials

Brass — QQ-B-626
Beryllium Copper — QQ-C-530
PTFE — MIL-P-19468
Polypropylene — General purpose
Copper, Annealed — QQ-C-576
Phosphor Bronze — QQ-B-750
Silicone Rubber — ZZ-R-765

Plating

Silver — QQ-S-365
Nickel — QQ-N-290
Tin — ASTM-B-545



Electrical Characteristics

Nominal Impedance — Non-constant
Working Voltage — 500 volts rms sea level
Insulation Resistance — 5000 megohms min.
Dielectric Withstanding Voltage — 1500 volts rms sea level

Mechanical Characteristics

Mating/Unmating — Bayonet lock-quick connect/ disconnect
Cable Attachment — Crimp type - Simultaneous center and braid
Coupling Nut Retention — 100 lbs. [444 N] min.
Cable Retention — 25 lbs. [111 N] min., RG 108A/U cable
Durability — 200 cycles per MIL-C-39012

Environmental Characteristics

Temperature Range — -55°C to +85°C
Vibration — MIL-STD-202, Method 204, Condition B
Shock — MIL-STD-202, Method 213, Condition I, 100 G's
Salt Spray — MIL-STD-202, Method 101, Condition B
Temperature Cycling — MIL-STD-202, Method 102, Condition C

Catalog 1307191
Revised 3-07

www.tycoelectronics.com

Dimensions are in millimeters and inches unless otherwise specified. Values in brackets are standard equivalents.

Dimensions are shown for reference purposes only. Specifications subject to change.

USA: 1-800-522-6752
Canada: 1-905-470-4425
Mexico: 01-800-733-8926
C. America: 52-55-1106-0803

South America: 55-11-2103-6000
Hong Kong: 852-2735-1628
Japan: 81-44-844-8013
UK: 44-8706-080-208

Twin BNC Connectors (Continued)

Plugs

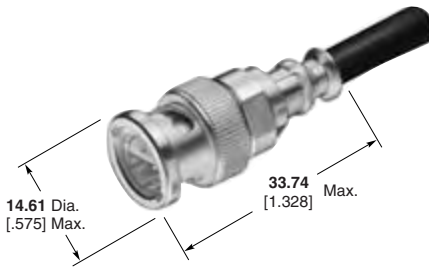

RG/U Cable	Center Contact Plating	Body Plating	Dielectric	Integral Die Hand Tool	Part No.
108, 108A BELDEN 9272, 89272	Silver	Silver	PTFE	69667	**5332225**
	Silver	Nickel	Polypropylene	69667	**5332225-5**
TROMPETER TWC-124-2	Silver	Silver	PTFE	69667	**5332225-3**
ROLM 49D2401 RAYCHEM 7824D013	Silver	Nickel	Polypropylene	69667	**5332225-6**

Bulkhead Jack

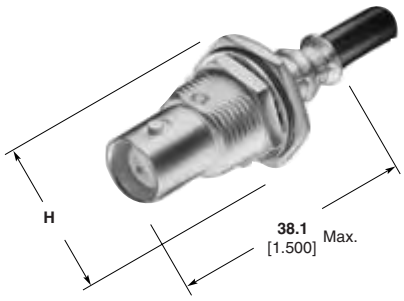

H = **17.45** [.687] Max. across flats, **20.32** [.800] Max. across points

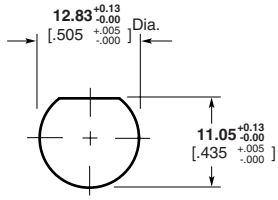

Maximum Panel Thickness **3.18** [.125]

Recommended Panel Cutout

RG/U Cable	Center Contact Plating	Body Plating	Dielectric	CERTI-CRIMP Hand Tool with Integral Die	Integral Die Hand Tool	Die Insert for Tools: Hand Tool-69710-1, 626 Pneu. Head 318161-1	Part No.
108, 108A BELDEN 9272, 89272	Silver	Silver	PTFE	—	69667	69708	**5332342**

BELDEN is a trademark of Belden Wire and Cable Company.
ROLM is a trademark of the Rolm Corp.
TROMPETER is a trademark of Trompeter Electronics, Inc.

Note: Part Numbers are RoHS compliant except: ♦ Indicates non-RoHS compliant.

Catalog 1307191
Revised 3-07

www.tycoelectronics.com

Dimensions are in millimeters and inches unless otherwise specified. Values in brackets are standard equivalents.

Dimensions are shown for reference purposes only. Specifications subject to change.

USA: 1-800-522-6752
Canada: 1-905-470-4425
Mexico: 01-800-733-8926
C. America: 52-55-1106-0803

South America: 55-11-2103-6000
Hong Kong: 852-2735-1628
Japan: 81-44-844-8013
UK: 44-8706-080-208

Twin BNC Connectors (Continued)

Right-Angle PC Board/ Panel Mount Jacks

Material

Body — VALOX, White
Center Contacts — Gold
Dielectric — Polymethylpentene

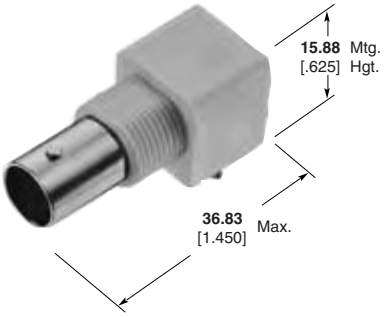

With Mounting Posts
Part No. 5228686-1

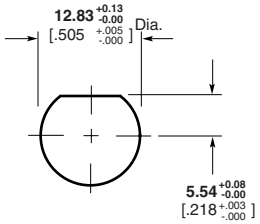

Maximum Panel Thickness **6.1** [.240]

Recommended Panel Cutout

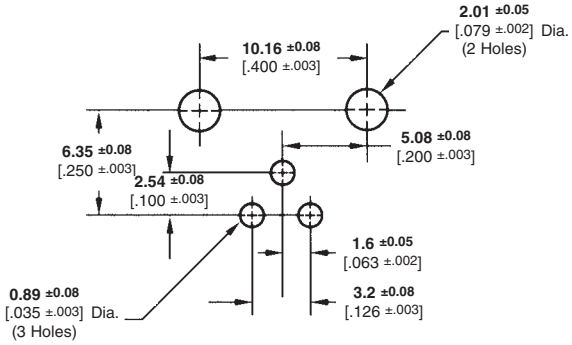

Recommended PC Board Layout

Vertical PC Board/ Panel Mount Jacks

Material

Body — VALOX, White
Center Contacts — Gold
Dielectric — Polymethylpentene

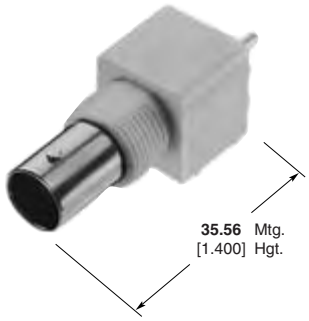

With Mounting Posts
Part No. 5221198-1

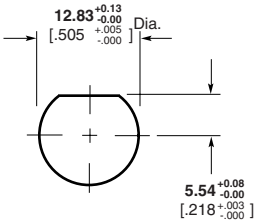

Maximum Panel Thickness **6.1** [.240]

Recommended Panel Cutout

Lockwasher and Jam Nut



Part No. 1-329632-2



Part No. 1-329631-2

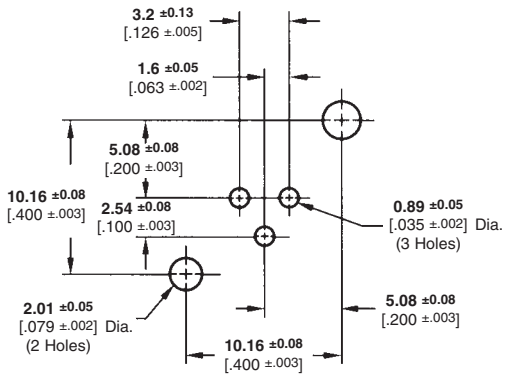

Recommended PC Board Layout

VALOX is a trademark of General Electric Company.

Note: Part Numbers are RoHS compliant except: ♦ Indicates non-RoHS compliant.

Catalog 1307191
Revised 3-07

www.tycoelectronics.com

Dimensions are in millimeters and inches unless otherwise specified. Values in brackets are standard equivalents.

Dimensions are shown for reference purposes only. Specifications subject to change.

USA: 1-800-522-6752
Canada: 1-905-470-4425
Mexico: 01-800-733-8926
C. America: 52-55-1106-0803

South America: 55-11-2103-6000
Hong Kong: 852-2735-1628
Japan: 81-44-844-8013
UK: 44-8706-080-208

Twin BNC Connectors (Continued)

Vertical PC Board Mount Jack



Plating

Body — Nickel
Center Contacts — Gold
Dielectric — Polymethylpentene

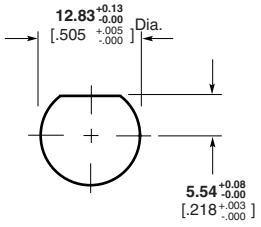

Part No. 5415832-1
Recommended Panel Cutout

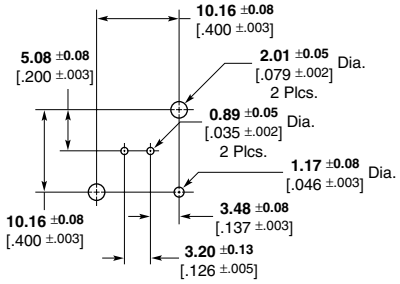

PCB Configuration

Bulkhead Jack Adapter

Plating

Body — Silver
Center Contacts — Silver

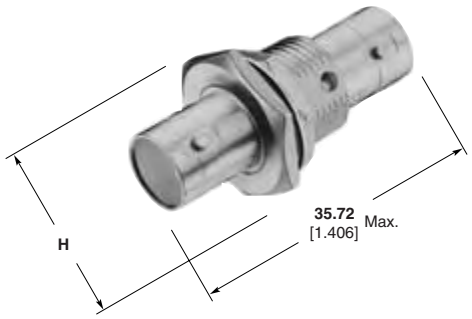

H = **17.45** [.687] Max. across flats, **20.32** [.800] Max. across points

Part No. 5332215

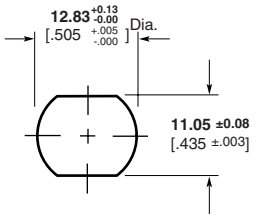

Maximum Panel Thickness **3.18** [.125]

Recommended Panel Cutout

Note: Part Numbers are RoHS compliant except: ♦ Indicates non-RoHS compliant.

Catalog 1307191
Revised 3-07

www.tycoelectronics.com

Dimensions are in millimeters and inches unless otherwise specified. Values in brackets are standard equivalents.

Dimensions are shown for reference purposes only. Specifications subject to change.

USA: 1-800-522-6752
Canada: 1-905-470-4425
Mexico: 01-800-733-8926
C. America: 52-55-1106-0803

South America: 55-11-2103-6000
Hong Kong: 852-2735-1628
Japan: 81-44-844-8013
UK: 44-8706-080-208

F Series and G Series Connectors

Product Facts

- **Designs meet SCTE requirements where applicable**
- **Plugs, jacks and adapters available**
- **Board mount and cable mount available**
- **Surface mount connectors available**
- **Sealed product available**
- **High current carrying capabilities**



Tyco Electronics F Series connectors offer performance, which is driven by evolving OEM requirements and expectations. Improved VSWR beyond 1 GHz, high current carrying capability, and pressure sealed products are now part of the standard product offering. Designs compliant with ANSI/SCTE, Bellcore, UL/CSA, and various other industry and agency standards are also available.

Both cable applied and PCB terminated products are offered in a variety of styles. The cable connectors are designed for fast, accurate termination with tools common to the industry. Application cost reductions can be achieved using Tyco Electronics PCB terminated products; press-fit designs eliminate the need for soldering. Center of gravity control and PCB retention designs prevent tipping and eliminate fixturing during soldering. Integral mechanical keys and “D flats” prevent rotation in panels.

These products provide the highly reliable, cost-effective solutions demanded by today’s evolving marketplace.

Product Specification

108-1518 — Connector Coaxial, F Series, RF, Single Crimp Plug

108-1643 — Connector Coaxial, F Series, RF, PCB Mounted

108-1755 — Connector Economy, F Series, RF Coaxial, PCB

108-1757 — Connector, 15 amp, G Series Jack, PCB

108-1758 — Connector, F Series Jack, PCB, Surface Mount

108-1629 — Feedthrough, Sealed F Port Jack

Instruction Sheets

408-9221 — Coaxial Series F Plug Connectors

408-4402 — Series F & G Coaxial Cable Bulkhead Jack Connector

408-4291 — PRO-CRIMPER II Hand Tool Assembly 58622-1 and 58622-2

Catalog 1307191
Revised 3-07

www.tycoelectronics.com

Dimensions are in millimeters and inches unless otherwise specified. Values in brackets are standard equivalents.

Dimensions are shown for reference purposes only. Specifications subject to change.

USA: 1-800-522-6752
Canada: 1-905-470-4425
Mexico: 01-800-733-8926
C. America: 52-55-1106-0803

South America: 55-11-2103-6000
Hong Kong: 852-2735-1628
Japan: 81-44-844-8013
UK: 44-8706-080-208

F Series Connectors

Plugs

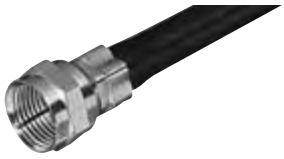

Crimp Style
A



Screw-On Style
B



Crimp Style, Hex
C

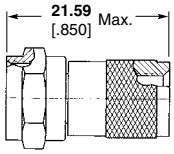

RG/U Cable	Termination Type	Body Plating	Style	"B" Threads	PRO-CRIMPER† Hand Tool Assembly	Part No.
6	Crimp	Nickel	A	—	58425-3, 58436-2, or 58621-2	**221539-2**
6	Screw-On	Nickel	B	M7x1	—	**221540-2**
59 BELDEN 9104, 9100*	Crimp	Nickel	C	—	58425-3, 58436-2, or 58621-2	**414766-1**
59	Crimp	Nickel	C	—	58425-3, 58436-2, or 58621-2	**414766-8**

*NID to inside cable.
† **8.23** [.324] Hex Crimp.



RG/U Cable	Termination Type	Center Contact Plating	Body Plating	Termination Tooling	Part No.
179 Headend Patch Panel	Crimp	Tin	Nickel	Braid: M 22520/5-01 w/ DANIELS Die Set Hx4-1637 (.128 Hex) Contact: M 22520/2-01 w/ DANIELS Positioner K727, Pos. 2	**5415226-1**

Right-Angle Plugs, Crimp



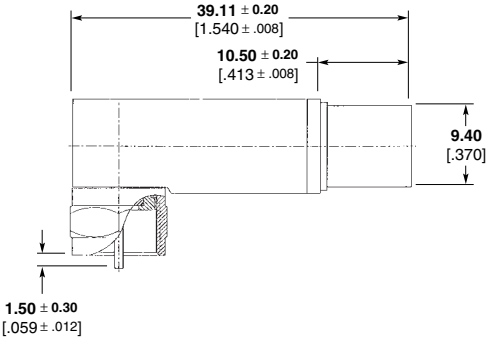

RG/U Cable	Termination Type	Center Contact Plating	Body Plating	Termination Tooling	Part No.
6 Std. Cable	Crimp	Tin	Nickel	use .324 inch Hex	**887098-1**

BELDEN is a trademark of Belden Wire and Cable Company.
DANIELS is a trademark of Daniels Manufacturing Corporation.

Note: Part Numbers are RoHS compliant except: ♦ Indicates non-RoHS compliant.

Catalog 1307191
Revised 3-07

www.tycoelectronics.com

Dimensions are in millimeters and inches unless otherwise specified. Values in brackets are standard equivalents.

Dimensions are shown for reference purposes only. Specifications subject to change.

USA: 1-800-522-6752
Canada: 1-905-470-4425
Mexico: 01-800-733-8926
C. America: 52-55-1106-0803

South America: 55-11-2103-6000
Hong Kong: 852-2735-1628
Japan: 81-44-844-8013
UK: 44-8706-080-208

F Series Connectors (Continued)

Bulkhead Jacks, Crimp, Rear Mount



RG/U Cable	Center Contact Plating	Body Plating	Die Set	Part No.
179	Bright Tin	Nickel	220210-1*	**5415712-1**

*Use with hand tool 354940-1

Bulkhead Jacks, Crimp, Splash Resistant, Front Mount



RG/U Cable	Center Contact Plating	Body Plating	Die Set	Part No.
179	Bright Tin	Nickel	220210-1*	**5415569-2**

*Use with hand tool 354940-1

Right-Angle PC Board Mount Jacks

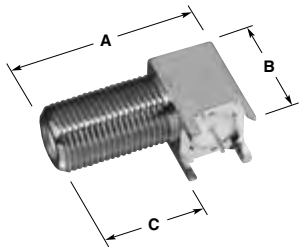

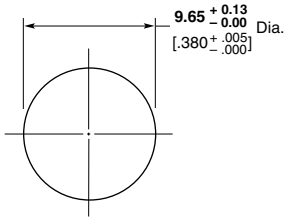

Recommended Panel Cutout

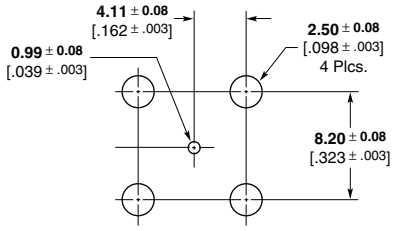

PC Board Layout

Body Plating		Center Contact Plating	Dimensions			Part No.
Barrel	Base		A	B	C	
Nickel	Tin	Tin	**25.40** 1.00	**14.48** .570	**15.90** .626	**5415302-1**
Nickel	Tin	Tin	**31.75** 1.250	**14.48** .570	**22.25** .876	**5415302-2**

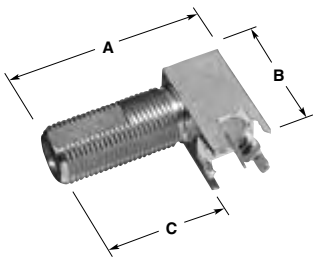

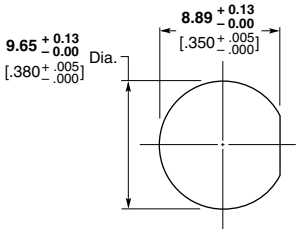

Recommended Panel Cutout

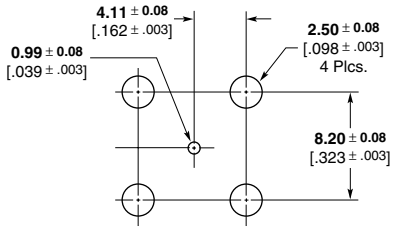

PC Board Layout

Body Plating		Center Contact Plating	Dimensions			Part No.
Barrel	Base		A	B	C	
Nickel	Tin	Tin	**29.97** 1.180	**17.53** .690	**12.19** .480	**5887078-1**

*Connectors willl accept a center conductor, diameter of **0.51-1.19** [.020-.047]

Note: Part Numbers are RoHS compliant except: ♦ Indicates non-RoHS compliant.

Catalog 1307191
Revised 3-07

www.tycoelectronics.com

Dimensions are in millimeters and inches unless otherwise specified. Values in brackets are standard equivalents.

Dimensions are shown for reference purposes only. Specifications subject to change.

USA: 1-800-522-6752
Canada: 1-905-470-4425
Mexico: 01-800-733-8926
C. America: 52-55-1106-0803

South America: 55-11-2103-6000
Hong Kong: 852-2735-1628
Japan: 81-44-844-8013
UK: 44-8706-080-208

F Series Connectors (Continued)

Right-Angle PC Board Mount Jacks (Continued)

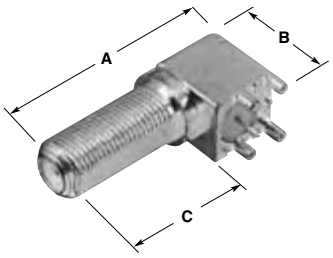

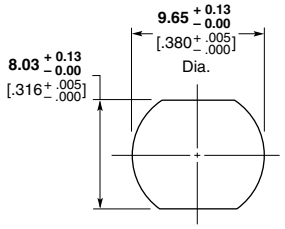

Recommended Panel Cutout

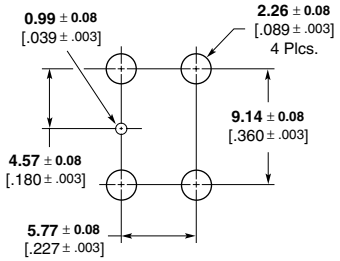

PC Board Layout

Body Plating		Center Contact Plating	Dimensions			Part No.
Barrel	Base		A	B	C	
Nickel	Tin	Tin	**33.81** 1.331	**15.75** .620	**19.86** .782	**5415276-2***

*Connector will accept center conductor diameter range of **0.56-1.19** [.022-.047].

Right-Angle PC Board Mount Jack, High Temperature

*High temperature versions use PTFE dielectric (see table)

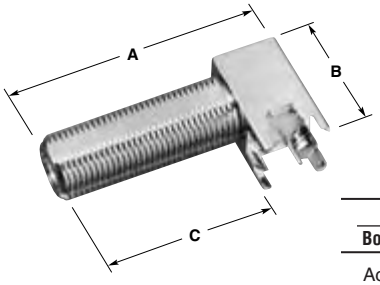

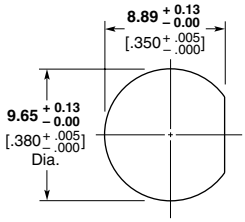

Recommended Panel Cutout

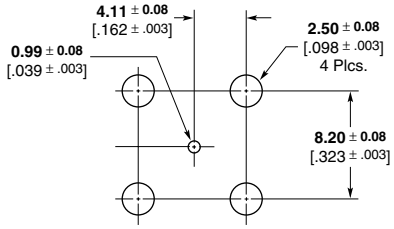

PC Board Layout

Dielectric			Solder Post Plating	Dimensions			Part No.
Bottom	Middle	Front		A	B	C	
Acetal	Acetal	Polypropylene	Nickel	**35.61** 1.402	**16.89** .665	**26.11** 1.028	**5415024-1**
Acetal	Acetal	Polypropylene	Tin	**35.61** 1.402	**16.89** .665	**26.11** 1.028	**5415024-3**
PTFE	PTFE	PTFE	Tin	**25.40** 1.00	**17.91** .705	**14.99** .590	**5415214-1***

*Pin in paste reflow / high temperature processing.

Note: Part Numbers are RoHS compliant except: ♦ Indicates non-RoHS compliant.

Catalog 1307191
Revised 3-07

www.tycoelectronics.com

Dimensions are in millimeters and inches unless otherwise specified. Values in brackets are standard equivalents.

Dimensions are shown for reference purposes only. Specifications subject to change.

USA: 1-800-522-6752
Canada: 1-905-470-4425
Mexico: 01-800-733-8926
C. America: 52-55-1106-0803

South America: 55-11-2103-6000
Hong Kong: 852-2735-1628
Japan: 81-44-844-8013
UK: 44-8706-080-208

F Series Connectors (Continued)

Surface Mount, Straddle Jack

Contact will accept center conductor diameter range **0.56–1.19** [.022–.047]
Center of gravity balanced for automated pick and place and anti-tipping during solder reflow process.



Part No. 5415322-2

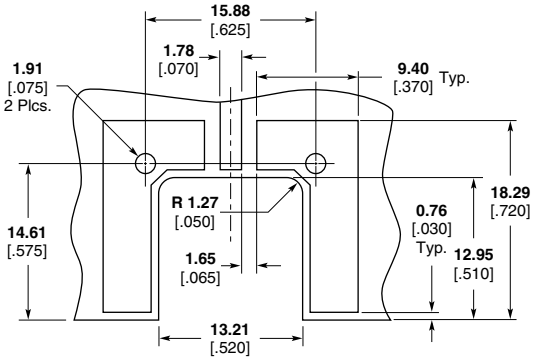

Recommended PC Board Layout

Vertical PC Board Mount Jacks

Connector will accept a center conductor diameter of **0.56–1.19** [.022–.047]

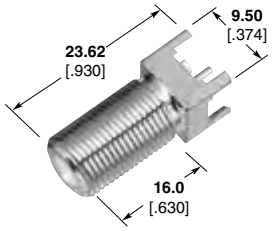

Part No. 5887046-1

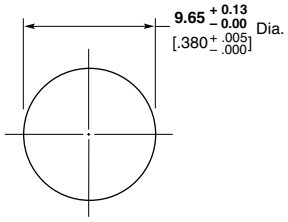

Recommended Panel Cutout

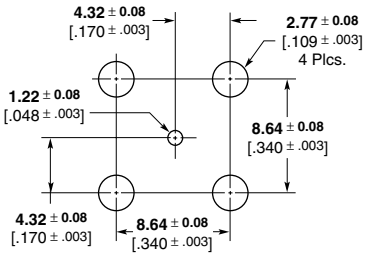

PC Board Layout

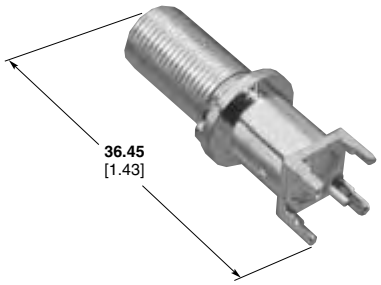

Part No. 6274020-1

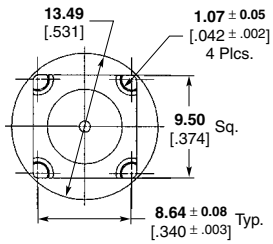

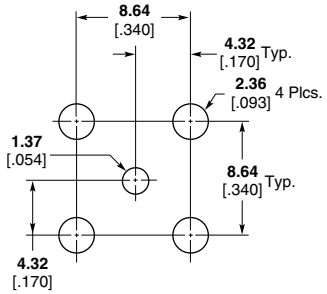

PC Board Layout

Adapters

Jack to Jack
Feed through Adapter



Part No. 282938-2

Jack to Plug
Right-Angle Adapter



Part No. 5887089-1

Note: Part Numbers are RoHS compliant except: ♦ Indicates non-RoHS compliant.

Catalog 1307191
Revised 3-07

www.tycoelectronics.com

Dimensions are in millimeters and inches unless otherwise specified. Values in brackets are standard equivalents.

Dimensions are shown for reference purposes only. Specifications subject to change.

USA: 1-800-522-6752
Canada: 1-905-470-4425
Mexico: 01-800-733-8926
C. America: 52-55-1106-0803

South America: 55-11-2103-6000
Hong Kong: 852-2735-1628
Japan: 81-44-844-8013
UK: 44-8706-080-208

G Series Connectors

Bulkhead Jack, Crimp



RG/U Cable	Termination Type	Body Plating	Part No.
179	Crimp	Nickel	**5415683-1**

Termination Tooling: Use 220210-1 die set for Contact only.
Use Certi-Crimp Hand Tool 220009-1 for ferrule.

Bulkhead Jack, PC Board

Connector will accept center conductor diameter range **0.97–1.65** [.038–.065] (415332-1 only)



Part No. 5415332-1 (15 Amp)
Part No. 6274032-1

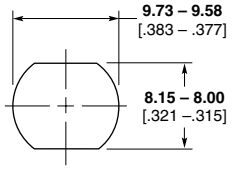

Recommended Panel Cutout for 5415332-1

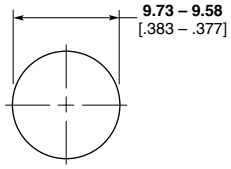

Recommended Panel Cutout for 6274032-1

Jack, Bulkhead PC Board

Connector will accept center conductor diameter range **0.97–1.07** [.038–.042]



Part No. 5887000-1

Right-Angle PC Board Mount Plug

Includes board retention feature to prevent tipping during solder process.



Part No. 5415406-2

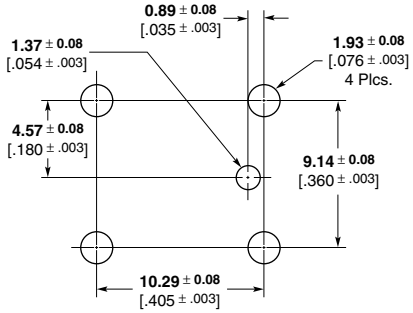

PC Board Layout

Vertical PC Board Mount Plug

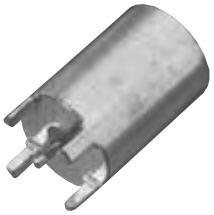

Part No. 6274045-1

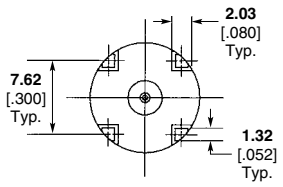

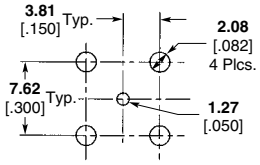

PC Board Layout

Note: Part Numbers are RoHS compliant except: ♦ Indicates non-RoHS compliant.

Catalog 1307191
Revised 3-07

www.tycoelectronics.com

Dimensions are in millimeters and inches unless otherwise specified. Values in brackets are standard equivalents.

Dimensions are shown for reference purposes only. Specifications subject to change.

USA: 1-800-522-6752
Canada: 1-905-470-4425
Mexico: 01-800-733-8926
C. America: 52-55-1106-0803

South America: 55-11-2103-6000
Hong Kong: 852-2735-1628
Japan: 81-44-844-8013
UK: 44-8706-080-208

G Series Connectors (Continued)

Adapters

F Jack to G Jack Bulkhead Adapter



Part No. 415327-1

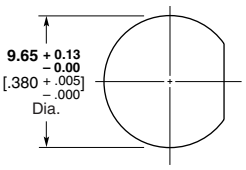

Recommended Panel Cutout

F Jack to G Plug Bulkhead Adapter

Connector will accept center conductor diameter range of **0.51–1.19** [.020–.047].

Panel nut 887003-3 available for float mounting.



Part No. 415523-1

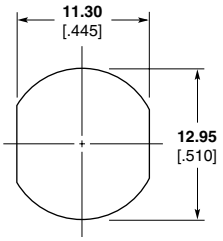

Recommended Panel Cutout

Note: Part Numbers are RoHS compliant except: ♦ Indicates non-RoHS compliant.

Catalog 1307191
Revised 3-07

www.tycoelectronics.com

Dimensions are in millimeters and inches unless otherwise specified. Values in brackets are standard equivalents.

Dimensions are shown for reference purposes only. Specifications subject to change.

USA: 1-800-522-6752
Canada: 1-905-470-4425
Mexico: 01-800-733-8926
C. America: 52-55-1106-0803

South America: 55-11-2103-6000
Hong Kong: 852-2735-1628
Japan: 81-44-844-8013
UK: 44-8706-080-208

SMA Connectors

Product Facts

- **Performance to 12.4 GHz and beyond**
- **Available in various base metal options, including stainless steel, brass and zinc diecast**
- **Uses industry standard crimp tools and processes**
- **Available with corrosion resistant, non-magnetic White Bronze plating**
- **Meets all performance requirements for MIL-C-39012.**

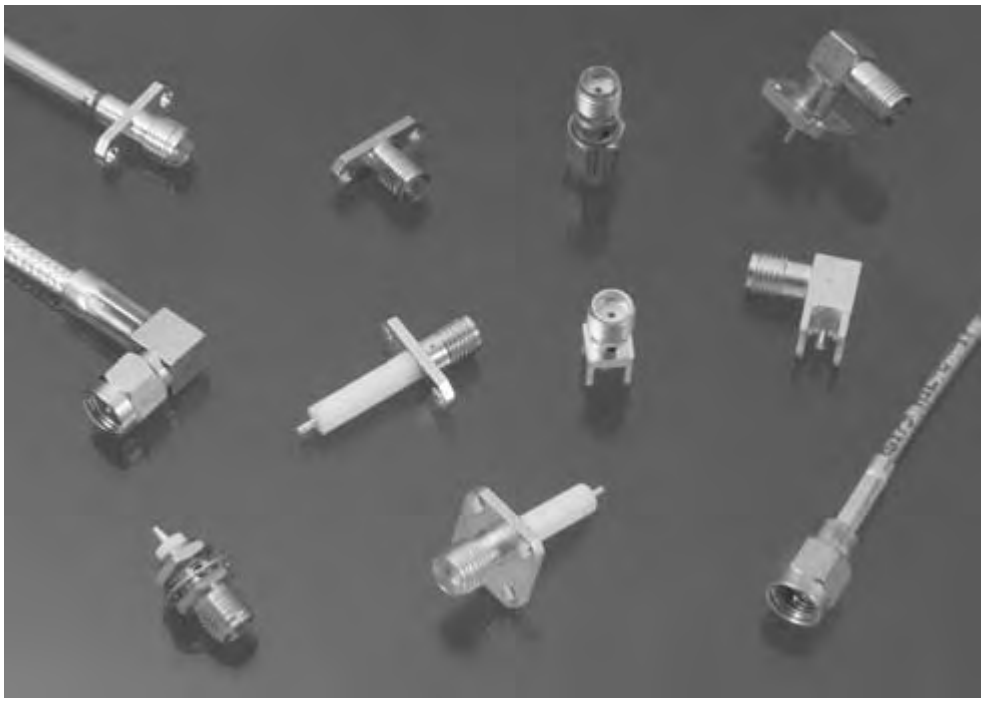

Tyco Electronics offers a complete line of SMA connectors designed for performance to 18 GHz to satisfy the growing demand for SMA connectors in the wireless communications industry. The SMA product line offers stainless steel bodies, as well as non-ferrous metals. Various plating options are available, including Gold and White Bronze. The SMA interface is fully compatible with Mil-C-39012.

While still offering various options on military (QPL) approved connectors, Tyco Electronics has developed a complete offering tailored to the commercial Communications industry. This includes 3 piece flexible cable products for popular RG 316, 142 and RD 316 cable utilizing industry standard HEX crimps.

The SMA series meets the performance, quality and application requirements of the commercial marketplace. This includes White Bronze plating, a unique finish developed by Tyco Electronics to address the performance needs of the telecommunications market. This plating is highly resistant to wear, and contains no ferrous metals, thus displaying excellent intermodulation characteristics.

To satisfy the broad range of commercial applications, SMA connectors are available in a broad range of standard configurations including; straight and right-angle cable applied plugs, bulkhead cable jacks, two and four hole flange mount panel jacks, straight and right-angle pcb mount jacks and various between and in series adapters. Numerous packaging and testing options are also available to meet specific system criteria as well.

Additionally, standard military approved (QPL) interfaces are offered as well. Including connectors for semi-rigid cable and micro strip applications.

The 3 Piece SMA offering is designed especially for applications in cellular infrastructure where InterModulation Products (IMP) must be minimized. By limiting non-linearities within the connectors, IMP is reduced and increased channel capacity can be offered.

Between Series Adapters

For SMA Between Series Adapters, see pages 251-260.

Catalog 1307191
Revised 3-07

www.tycoelectronics.com

Dimensions are in millimeters and inches unless otherwise specified. Values in brackets are standard equivalents.

Dimensions are shown for reference purposes only. Specifications subject to change.

USA: 1-800-522-6752
Canada: 1-905-470-4425
Mexico: 01-800-733-8926
C. America: 52-55-1106-0803

South America: 55-11-2103-6000
Hong Kong: 852-2735-1628
Japan: 81-44-844-8013
UK: 44-8706-080-208

SMA Connectors (Continued)

Specifications

	MIL-C-39012 Applicable Paragraph	
General		
Material	3.3	Steel corrosion resistant per ASTM-A-582 and ASTM-A-484, Type 303. Beryllium copper per ASTM-B-196. PTFE Fluorocarbon per ASTM-D-1710.
Finish	3.3.1	Center contacts shall be gold plated to a min. thickness of .00127 [.00005] in accordance with MIL-G-45204, ASTM-B-488. All other metal parts shall be finished as to provide a connector which meets the corrosion requirements.
Design	3.4	The design shall be such that the outline shown in this catalog and the interface dimensions of MIL-STD-348A are met.
Electrical		
Insulation Resistance	3.11	The insulation resistance shall not be less than 10,000 megohms.
Corona Level	3.22	Refer to applicable military slash sheet, product drawing or spec.
Dielectric Withstanding Voltage	3.17	Refer to applicable military slash sheet, product drawing or spec.
RF High Potential	3.23	Refer to applicable military slash sheet, product drawing or spec.
Contact Resistance	3.16	Refer to applicable military slash sheet, product drawing or spec.
VSWR	3.14	Refer to applicable military slash sheet, product drawing or spec. Frequency range dependent on cable used.
RF Leakage	3.26	Refer to applicable military slash sheet, product drawing or spec.
Insertion Loss	3.27	Refer to applicable military slash sheet, product drawing or spec. Frequency range dependent on cable used.
Mechanical		
Force to Engage	3.5.1	The torque required to engage and disengage shall not exceed 2 in.-lbs. The longitudinal force is not applicable.
Coupling Nut Retention	3.25	60 lbs. min. Applicable for plug connectors only.
Coupling Proof Torque	3.6	15 in.-lbs. min. Applicable for plug connectors only.
Cable Retention	3.24	Refer to applicable military slash sheet or consult factory.
Mating Characteristics	3.7	Applicable to jack connectors only. Reference MIL-STD-348A for dimensions; oversize test pin .953 [.0375] min. dia., .76 - 1.14 [.030-.045] deep, insertion force 3 lbs. max. with .940 [.0370] min. dia. pin, withdrawal force 1 oz. min. with .902 [.0355] max. dia. pin.
Connector Durability	3.15	The connector to be tested and its mating connector shall be subjected to 500 insertion and withdrawal cycles at 12 cycles per minute max. The connector shall show no evidence of mechanical failure and shall meet the mating characteristic requirements.
Recommended Mating Torque	—	7 to 10 in.-lbs.
Environmental		
Vibration	3.18	Specification MIL-STD-202, method 204, test condition D
Shock	3.19	Specification MIL-STD-202, method 213, test condition I
Thermal Shock	3.20	Refer to applicable military slash sheet or consult factory.
Corrosion (Salt Spray)	3.13	Specification MIL-STD-202, method 101, test condition B.
Moisture Resistance	3.21	Specification MIL-STD-202, method 106. No measurements at high humidity. Insulation resistance shall be at least 200 megohms within 5 minutes of removal from humidity.

Catalog 1307191
Revised 3-07

www.tycoelectronics.com

Dimensions are in millimeters and inches unless otherwise specified. Values in brackets are standard equivalents.

Dimensions are shown for reference purposes only. Specifications subject to change.

USA: 1-800-522-6752
Canada: 1-905-470-4425
Mexico: 01-800-733-8926
C. America: 52-55-1106-0803

South America: 55-11-2103-6000
Hong Kong: 852-2735-1628
Japan: 81-44-844-8013
UK: 44-8706-080-208

SMA Connectors (Continued)

Electrical

Connector Type	Cable	Frequency Max. (GHz)	VSWR x (fGHz)	Contact Resistance (milliohms max.)		Insulation Resistance (megohms min.)	Dielectric Withstanding Voltage (Volts RMS)	Corona Extinction Voltage at 70,000 Ft. (V RMS min.)	RF Transmission Loss	RF High Potential at 5 MHz (V RMS)	RF Leakage (dB min.)
				Center Contact	Outer Contact						
Straight Cable Plug without Contact	RG 402 (3.58 [.141])	Note 1	1.02 + .005	N/A	2.0	10,000	N/A	250	N/A	670	-(90-fGHz)
Straight Cable Plugs & Jacks Solder Attachment	RG 405 (2.16 [.085])	18.0	1.05 + .005	2.0	2.0	10,000	1000	250	.03 √f(GHz)	670	-(90-fGHz)
	RG 402 (3.58 [.141])	18.0	1.05 + .005	2.0	2.0	10,000	1500	375	.03 √f(GHz)	1000	-(90-fGHz)
	3.58 [.141] Microporous	18.0	1.05 + .005	2.0	2.0	10,000	1500	375	.03 √f(GHz)	1000	-(90-fGHz)
	RG 401 (6.35 [.250])	18.0	1.07 + .007	2.0	2.0	10,000	1500	375	.03 √f(GHz)	1000	-(90-fGHz)
	RG 174, 188, 316	Note 1	1.15 + .01	2.0	2.0	10,000	750	190	.06 √f(GHz)	500	-(60-fGHz)
	RG 55, 58, 141, 142, 223, 303, 400	Note 1	1.10 + .005	2.0	2.0	10,000	1000	250	.06 √f(GHz)	670	-(60-fGHz)
Straight Cable Plugs & Jacks Solder Clamp Attachment	RG 405 (2.16 [.085])	12.4	1.10 + .015	2.0	2.0	10,000	1000	250	.03 √f(GHz)	670	-(90-fGHz)
	RG 402 (3.58 [.141])	12.4	1.07 + .01	2.0	2.0	10,000	1500	375	.03 √f(GHz)	1000	-(90-fGHz)
Straight Cable Plugs & Jacks Clamp Attachment	RG 55, 58, 141, 142 223, 400	Note 1	1.10 + .005	2.0	2.0	10,000	1000	250	.06 √f(GHz)	670	-(60-fGHz)
	RG 174, 188, 316	Note 1	1.15 + .01	2.0	2.0	10,000	750	190	.06 √f(GHz)	500	-(60-fGHz)
	RG 180, 195	Note 1	—	2.0	2.0	10,000	750	190	—	500	-(60-fGHz)
Straight Cable Plugs & Jacks Crimp Attachment	RG 55, 142, 223, 400	Note 1	1.10 + .005	2.0	2.0	10,000	1000	250	.06 √f(GHz)	670	-(60-fGHz)
	RG 58, 141, 303	Note 1	1.10 + .005	2.0	2.0	10,000	1000	250	.06 √f(GHz)	670	-(60-fGHz)
	RG 174, 188, 316	Note 1	1.15 + .01	2.0	2.0	10,000	750	190	.06 √f(GHz)	500	-(60-fGHz)
	RG 180, 195	Note 1	—	2.0	2.0	10,000	750	190	—	500	-(60-fGHz)
	RG 178, 196	Note 1	1.2 + .02	2.0	2.0	10,000	500	125	.06 √f(GHz)	335	-(60-fGHz)
Straight Cable Plugs & Jacks Compression Clamp Attachment	RG 401 (6.35 [.250])	18.0	1.07 + .01	2.0	2.0	10,000	1500	375	.05 √f(GHz)	1000	-70 dB min.
	6.35 [.250] Microporous	18.0	1.07 + .01	2.0	2.0	10,000	1500	375	.05 √f(GHz)	1000	-70 dB min.
	6.35 [.250] 3 Spline	18.0	1.07 + .01	2.0	2.0	10,000	1500	375	.05 √f(GHz)	1000	-70 dB min.
	6.35 [.250] 5 Spline	18.0	1.07 + .01	2.0	2.0	10,000	1500	375	.05 √f(GHz)	1000	-70 dB min.
Right-Angle Cable Plugs Solder Attachment	RG 405 (2.16 [.085])	12.4	1.18 + .015	2.0	2.0	10,000	1000	250	.04 √f(GHz)	670	-(90-fGHz)
	RG 405 (2.16 [.085])	18.0	1.18 + .015	2.0	2.0	10,000	1000	250	.04 √f(GHz)	670	-(90-fGHz)
	RG 402 (3.58 [.141])	12.4	1.15 + .015	2.0	2.0	10,000	1500	325	.04 √f(GHz)	1000	-(90-fGHz)
	RG 402 (3.58 [.141])	18.0	1.10 + .010	2.0	2.0	10,000	1500	250	.05 √f(GHz)	1000	-(90-fGHz)
	RG 55, 58, 141, 142, 223, 303, 400	Note 1	1.15 + .01	2.0	2.0	10,000	1000	250	.07 √f(GHz)	670	-(60-fGHz)
	RG 174, 188, 316	Note 1	1.15 + .02	2.0	2.0	10,000	750	190	.07 √f(GHz)	500	-(60-fGHz)
Right-Angle Cable Plugs Crimp Attachment	RG 55, 142, 223, 400	Note 1	1.15 + .02	2.0	2.0	10,000	1000	250	.07 √f(GHz)	670	-(60-fGHz)
	RG 58, 141, 303	Note 1	1.15 + .02	2.0	2.0	10,000	1000	250	.07 √f(GHz)	670	-(60-fGHz)
	RG 174, 188, 316	Note 1	1.18 + .02	2.0	2.0	10,000	750	190	.07 √f(GHz)	500	-(60-fGHz)
	RG 180, 195	Note 1	—	2.0	2.0	10,000	750	190	—	500	-(60-fGHz)
	RG 178, 196	Note 1	1.25 + .025	2.0	2.0	10,000	500	125	.07 √f(GHz)	335	-(60-fGHz)
Right-Angle Cable Plugs Clamp Attachment	RG 55, 58, 141, 142, 223, 303	Note 1	1.10 + .005	2.0	2.0	10,000	1000	250	.08 √f(GHz)	670	-(60-fGHz)
	RG 174, 188, 316	Note 1	1.15 + .01	2.0	2.0	10,000	750	190	.08 √f(GHz)	500	-(60-fGHz)
	RG 180, 195	Note 1	—	2.0	2.0	10,000	750	190	—	500	-(60-fGHz)
Flange Mount Plugs & Jacks Panel or Bulkhead Mount	Non-Captured	18.0	1.03 + .004	2.0	2.0	10,000	1000	250	.03 √f(GHz)	670	-(100-fGHz)
	Epoxy Captured	18.0	1.05 + .005	2.0	2.0	10,000	1000	250	.03 √f(GHz)	670	-(60-fGHz)
	Mechanical Capture	18.0	1.04 + .004	2.0	2.0	10,000	1000	250	.03 √f(GHz)	670	-(100-fGHz)
	Field Replaceable Hermetic Launchers	18.0	1.04 + .006	2.0	2.0	10,000	1000	250	.04 √f(GHz)	670	-(100-fGHz)
Bulkhead Feedthrough Jacks	Epoxy Captured	18.0	1.07 + .010	2.0	2.0	10,000	1000	250	.04 √f(GHz)	670	-(60-fGHz)
	Mechanical Capture	18.0	1.07 + .010	2.0	2.0	10,000	1000	250	.04 √f(GHz)	670	-(100-fGHz)
Right-Angle Flange Mount Jacks	N/A	18.0	1.07 + .015	2.0	2.0	10,000	1000	250	.08 √f(GHz)	670	-(90-fGHz)
	N/A	12.4	1.15 + .015	2.0	2.0	10,000	1000	250	.08 √f(GHz)	670	-(90-fGHz)
Printed Circuit Board Mount Straight Terminal	N/A	18.0	N/A	2.0	2.0	10,000	1000	250	N/A	670	N/A
Right-Angle Printed Circuit	N/A	12.4	N/A	2.0	2.0	10,000	1000	250	N/A	670	N/A
End Launch Stripline Circuit	N/A	18.0	1.05 + .005	2.0	2.0	10,000	1000	250	.03 √f(GHz)	670	-(60-fGHz)
Surface Launch Stripline Circuit	N/A	18.0	1.05 + .005	2.0	2.0	10,000	1000	250	.03 √f(GHz)	670	-(60-fGHz)
Right-Angle Surface Launch Stripline Circuit	N/A	12.4	1.15 + .015	2.0	2.0	10,000	1000	250	.08 √f(GHz)	670	-(60-fGHz)
	N/A	18.0	1.07 + .015	2.0	2.0	10,000	1000	250	.08 √f(GHz)	670	-(60-fGHz)

1. Maximum operating frequency of cable per MIL-C-17.
2. Specifications do not apply to hermetic or compression crimp connectors.
3. For Brass SMA: Frequency Range DC-6GHz, Impedance 50 Ohms, Insulation Resistance.

Catalog 1307191
Revised 3-07

www.tycoelectronics.com

Dimensions are in millimeters and inches unless otherwise specified. Values in brackets are standard equivalents.

Dimensions are shown for reference purposes only. Specifications subject to change.

USA: 1-800-522-6752
Canada: 1-905-470-4425
Mexico: 01-800-733-8926
C. America: 52-55-1106-0803

South America: 55-11-2103-6000
Hong Kong: 852-2735-1628
Japan: 81-44-844-8013
UK: 44-8706-080-208

SMA Connectors (Continued)

Interface Mating Dimensions

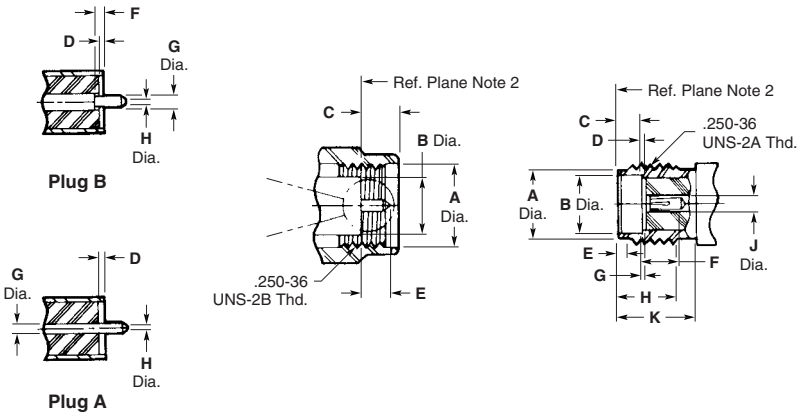

Plug

Dimension	Minimum	Maximum
A	**6.35** .250	—
B	—	**4.59** .1808
C	—	**3.43** .135
D	**0.00** .000	**0.25** .010
E	—	**2.54** .100
F	**0.00** .000	**0.25** .010
G	**0.90** .0355	**0.94** .037
H	**0.00** .000	**0.38** .015

Jack

Dimension	Minimum	Maximum
A	**5.28** .208	**5.49** .216
B	**4.60** .181	—
C	**1.91** .075	**1.98** .078
D	**0.00** .000	**0.25** .010
E	**0.38** .015	**1.43** .045
F	**2.92** .115	—
G	**0.00** .000	**0.25** .010
H	**4.32** .170	—
J	**.124** .049	**1.30** .051
K	**5.54** .218	—

Notes:
1. ID to meet VSWR and contact resistance when mated with 0.51 +.025/-.013 [.036 +.0010/-.0005] Dia. Pin.
2. When fully engaged, the two reference planes must coincide with metal to metal contact.
3. Metric equivalents (to the nearest 0.01mm) are given for general information only.

Catalog 1307191
Revised 3-07

www.tycoelectronics.com

Dimensions are in millimeters and inches unless otherwise specified. Values in brackets are standard equivalents.

Dimensions are shown for reference purposes only. Specifications subject to change.

USA: 1-800-522-6752
Canada: 1-905-470-4425
Mexico: 01-800-733-8926
C. America: 52-55-1106-0803

South America: 55-11-2103-6000
Hong Kong: 852-2735-1628
Japan: 81-44-844-8013
UK: 44-8706-080-208

SMA Connectors (Continued)
Flexible Cable

Straight Cable Plug, Solder



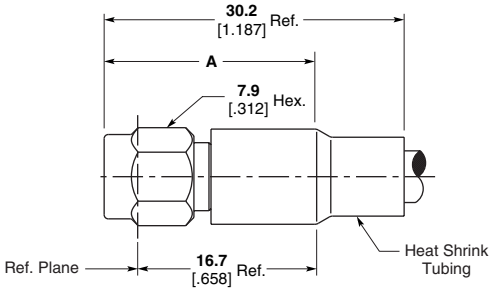

Cable Type RG/U	Body Material & Finish	Contact Captivation	Contact Attachment	Dimension A	Instruction Sheet	Part No.
55, 58, 141, 142, 223, 303, 400	Stainless, Gold[1]	No	Solder	**19.7** .775	408-4821	**1051638-1**
174, 188, 316	Stainless, Gold[1]	No	Solder	**17.5** .690	408-4756	**1051644-1**

[1]Coupling nut is passivated stainless steel.

Straight Cable Jack, Solder



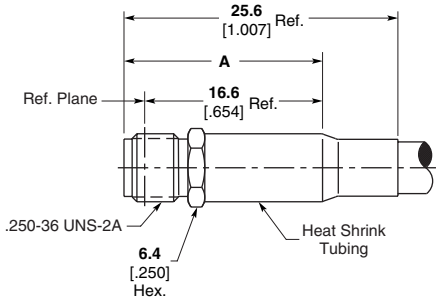

Cable Type RG/U	Body Material & Finish	Contact Captivation	Contact Attachment	Dimension A	Instruction Sheet	Part No.
55, 58, 141, 142, 223, 303, 400	Stainless, Gold	No	Solder	**18.5** .730	408-4820	**1051852-1**

Bulkhead Cable Jack, Solder



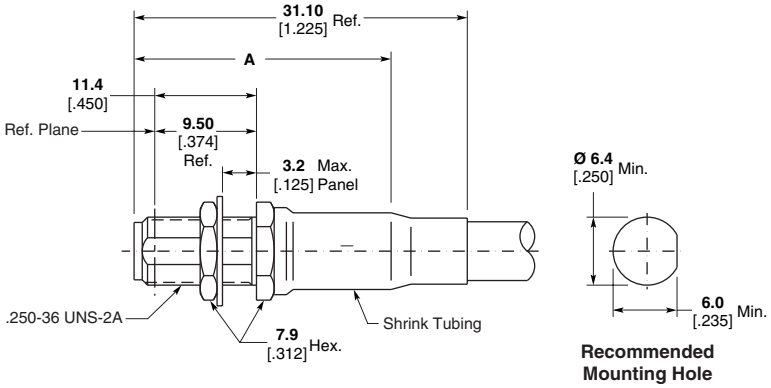

Cable Type RG/U	Body Material & Finish	Contact Captivation	Contact Attachment	Dimension A	Instruction Sheet	Part No.
RG 55, 58, 141, 142, 300	Stainless, Gold	No	Solder	**24.0** .945	408-4817	**1051861-1**
174, 188, 316	Stainless, Gold	No	Solder	**21.0** .825	408-4817	**1051942-1**

Note: Part Numbers are RoHS compliant except: ♦ Indicates non-RoHS compliant.

Catalog 1307191
Revised 3-07

www.tycoelectronics.com

Dimensions are in millimeters and inches unless otherwise specified. Values in brackets are standard equivalents.

Dimensions are shown for reference purposes only. Specifications subject to change.

USA: 1-800-522-6752
Canada: 1-905-470-4425
Mexico: 01-800-733-8926
C. America: 52-55-1106-0803

South America: 55-11-2103-6000
Hong Kong: 852-2735-1628
Japan: 81-44-844-8013
UK: 44-8706-080-208

SMA Connectors (Continued)
Flexible Cable (Continued)

Right-Angle Cable Plug, Solder



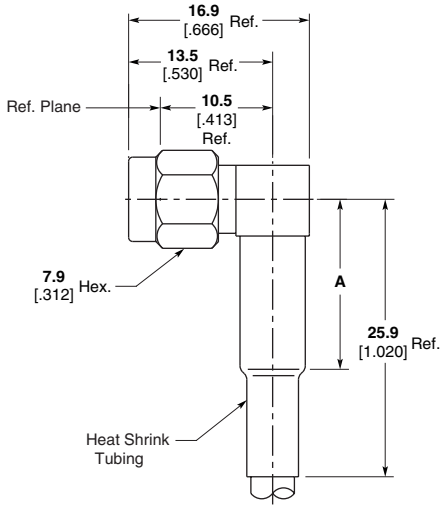

Cable Type RG/U	Body Material & Finish	Contact Captivation	Contact Attachment	Dimension A	Instruction Sheet	Part No.
55, 58, 141, 142, 223, 303, 400	Stainless, Gold[1]	Yes	Solder	**16.0** .630	408-4816	**1052063-1**
174, 188, 316	Stainless, Gold[1]	Yes	Solder	**11.2** .440	408-4815	**1052067-1**

[1]Coupling nut is passivated stainless steel.

Straight Cable Plug, Clamp



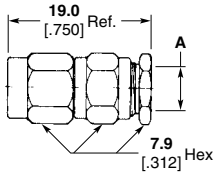

Cable Type RG/U	Body Material & Finish	Contact Captivation	Contact Attachment	Dimension A	Instruction Sheet	Part No.
174, 188, 316	Stainless, Pass.	Yes	Solder	**2.9** .116	408-4906	**1050721-1**

Straight Cable Jack, Clamp



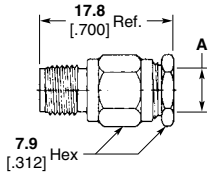

Cable Type RG/U	Body Material & Finish	Contact Captivation	Contact Attachment	Dimension A	Instruction Sheet	Part No.
174, 188, 316	Stainless, Pass.	Yes	Solder	**2.9** .116	408-4906	**1050903-1**

Note: Part Numbers are RoHS compliant except: ♦ Indicates non-RoHS compliant.

Catalog 1307191
Revised 3-07

www.tycoelectronics.com

Dimensions are in millimeters and inches unless otherwise specified. Values in brackets are standard equivalents.

Dimensions are shown for reference purposes only. Specifications subject to change.

USA: 1-800-522-6752
Canada: 1-905-470-4425
Mexico: 01-800-733-8926
C. America: 52-55-1106-0803

South America: 55-11-2103-6000
Hong Kong: 852-2735-1628
Japan: 81-44-844-8013
UK: 44-8706-080-208

SMA Connectors (Continued)
Flexible Cable (Continued)

Bulkhead Feedthrough Cable Jack, Clamp



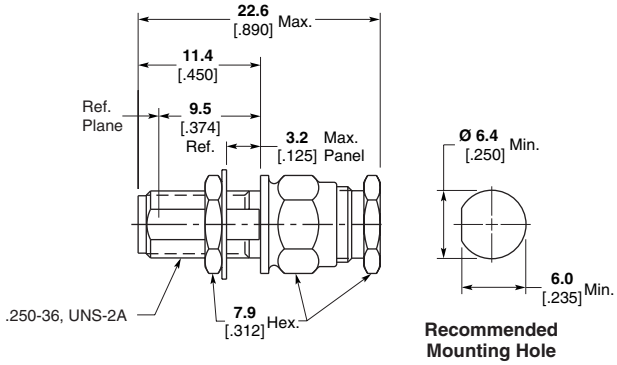

Cable Type RG/U	Body Material & Finish	Contact Captivation	Contact Attachment	Instruction Sheet	Part No.
174, 188, 316	Stainless, Pass.	Yes	Solder	408-4704	**1050996-1**

Right-Angle Cable Plug, Clamp



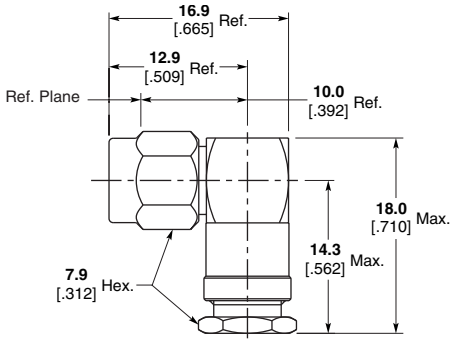

Cable Type RG/U	Body Material & Finish	Contact Captivation	Contact Attachment	Instruction Sheet	Part No.
174, 188, 316	Stainless, Pass.	Mechanical	Solder	408-4965	**1051140-1**

Straight Cable Plug, Crimp



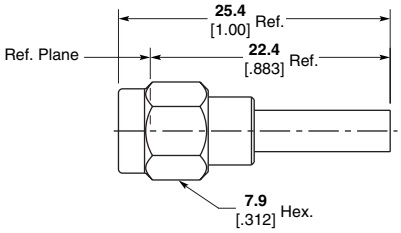

Cable Type RG/U	Body Material & Finish	Contact Captivation	Contact Attachment	Crimp Tooling Part No.	Instruction Sheet	Part No.
174, 179, 187, 188, 316	Stainless, Pass.	Mechanical	Solder/Crimp[2]	1055236-1	408-4661	**1056443-1**
RD316	Stainless, Pass.	Mechanical	Solder/Crimp[2]	1055236-1[1]	408-4661	**1056436-1**
55, 142, 223, 400	Stainless, Pass.	Mechanical	Solder/Crimp[2]	1055236-1	408-4661	**1056438-1**
174, 179, 187, 188, 316	Brass, White Bronze	Mechanical	Solder/Crimp[2]	1055236-1	408-4661	**1082034-1**

[1]Use die 1055270-1 to crimp RD316 ferrule.
[2]Use die 1055880-1 to crimp center contact.

Note: Part Numbers are RoHS compliant except: ♦ Indicates non-RoHS compliant.

Catalog 1307191
Revised 3-07

www.tycoelectronics.com

Dimensions are in millimeters and inches unless otherwise specified. Values in brackets are standard equivalents.

Dimensions are shown for reference purposes only. Specifications subject to change.

USA: 1-800-522-6752
Canada: 1-905-470-4425
Mexico: 01-800-733-8926
C. America: 52-55-1106-0803

South America: 55-11-2103-6000
Hong Kong: 852-2735-1628
Japan: 81-44-844-8013
UK: 44-8706-080-208

SMA Connectors (Continued)
Flexible Cable (Continued)

Straight Cable Jack, Crimp



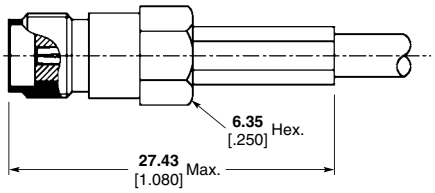

Style A

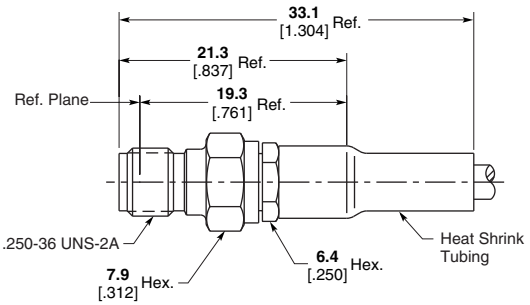

Style B

Cable Type RG/U	Body Material & Finish	Contact Captivation	Contact Attachment	Crimp Tooling Part No.	Instruction Sheet	Style	Part No.
174, 316	Brass, Nickel	Mechanical	Solder	[1]	408-4032	A	**5447648-3**
58, 141, 303	Stainless, Pass.	Mechanical	Solder	1055236-1	408-4704	B	**1051867-1**
174, 188, 316	Stainless, Pass.	Mechanical	Solder	1055236-1	408-4708	B	**1051855-1**
178, 196	Stainless, Pass.	Mechanical	Solder	1055236-1	408-4806	B	**1051869-1**

[1]Refer to Tyco Electronics Customer Print for tooling requirement. DANIELS Mil Tooling used for contact and ferrule crimp.

Bulkhead Feedthrough Cable Jack, Crimp



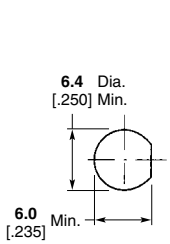

Recommended Mounting Hole

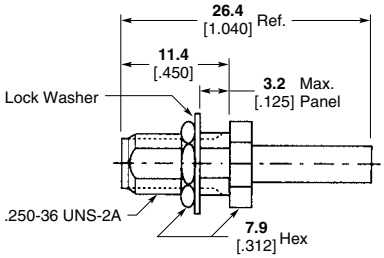

Cable Type RG/U	Body Material & Finish	Contact Captivation	Contact Attachment	Crimp Tooling Part No.	Instruction Sheet	Part No.
174, 179, 187, 188, 316	Stainless, Pass.	Mechanical	Solder/Crimp[2]	1055236-1	408-4661	**1056452-1**
RD316	Stainless, Pass.	Mechanical	Solder/Crimp[2]	1055236-1[3]	408-4661	**1056445-1**
58, 141, 303	Stainless, Pass.	Mechanical	Solder/Crimp[2]	1055236-1	408-4661	**1056450-1**
55, 142, 223, 400	Stainless, Pass.	Mechanical	Solder/Crimp[2]	1055236-1	408-4661	**1056447-1**
174, 188, 316	Brass, Nickel	Mechanical	Crimp	[1]	408-4032	**5448103-2**

[1]Refer to Tyco Electronics Customer Print for tooling requirement. DANIELS Mil Tooling used for contact and ferrule crimp.
[2]Use die 1055880-1 to crimp center contact.
[3]Use die 1055270-1 to crimp RD316 ferrule.

DANIELS is a trademark of Daniels Manufacturing Corporation.

Note: Part Numbers are RoHS compliant except: ♦ Indicates non-RoHS compliant.

Catalog 1307191
Revised 3-07

www.tycoelectronics.com

Dimensions are in millimeters and inches unless otherwise specified. Values in brackets are standard equivalents.

Dimensions are shown for reference purposes only. Specifications subject to change.

USA: 1-800-522-6752
Canada: 1-905-470-4425
Mexico: 01-800-733-8926
C. America: 52-55-1106-0803

South America: 55-11-2103-6000
Hong Kong: 852-2735-1628
Japan: 81-44-844-8013
UK: 44-8706-080-208

SMA Connectors (Continued)
Flexible Cable (Continued)

Right-Angle Cable Plug, Crimp



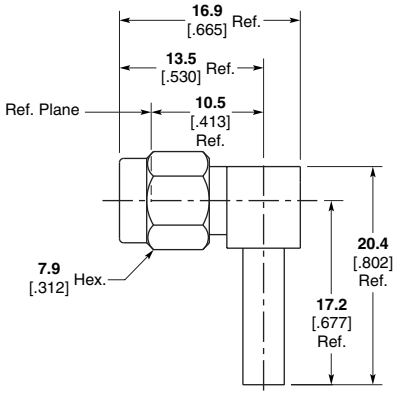

Cable Type RG/U	Body Material & Finish	Contact Captivation	Contact Attachment	Crimp Tooling Part No.	Instruction Sheet	Part No.
174, 179, 187, 188, 316	Stainless, Pass.	Mechanical	Solder	1055236-1	408-4659	**1056462-1**
58, 141, 303	Stainless, Pass.	Mechanical	Solder	1055236-1	408-4659	**1056456-1**

Right-Angle Cable Plug, Crimp

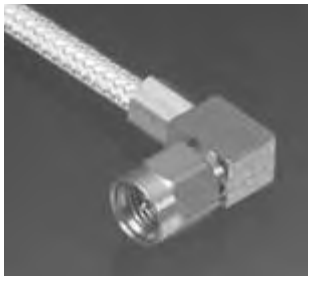

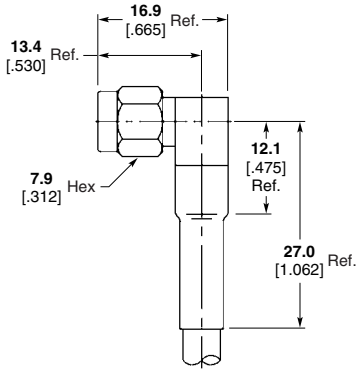

Cable Type RG/U	Body Material & Finish	Contact Captivation	Contact Attachment	Crimp Tooling Part No.	Instruction Sheet	Part No.
55, 142, 223, 400	Stainless, Pass.	Epoxy	Solder	1055236-1	408-4681	**1052072-1**
174, 188, 316	Stainless, Pass.	Epoxy	Solder	1055236-1	408-4683	**1052076-1**
178, 196	Stainless, Pass.	Epoxy	Solder	1055236-1	408-4801	**1052098-1**

Note: Part Numbers are RoHS compliant except: ♦ Indicates non-RoHS compliant.

Catalog 1307191
Revised 3-07

www.tycoelectronics.com

Dimensions are in millimeters and inches unless otherwise specified. Values in brackets are standard equivalents.

Dimensions are shown for reference purposes only. Specifications subject to change.

USA: 1-800-522-6752
Canada: 1-905-470-4425
Mexico: 01-800-733-8926
C. America: 52-55-1106-0803

South America: 55-11-2103-6000
Hong Kong: 852-2735-1628
Japan: 81-44-844-8013
UK: 44-8706-080-208

SMA Connectors (Continued)
Flexible Cable (Continued)

Straight Push-On



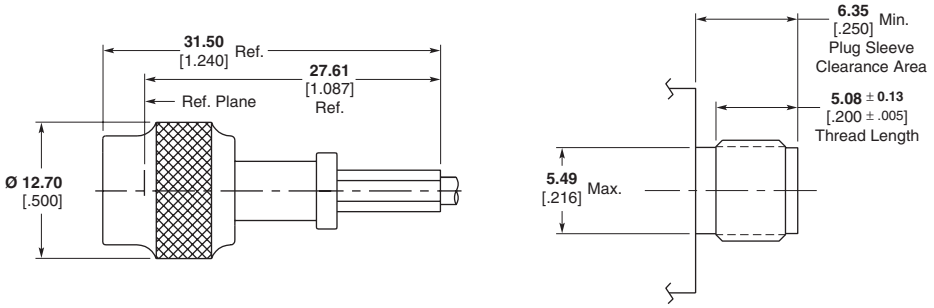

Cable Type RG/U	Body Material & Finish	Contact Captivation	Contact Attachment	Part No.
316	Beryllium Copper, Gold	Mechanical	Crimp	**1408541-1**

Right-Angle Push-On



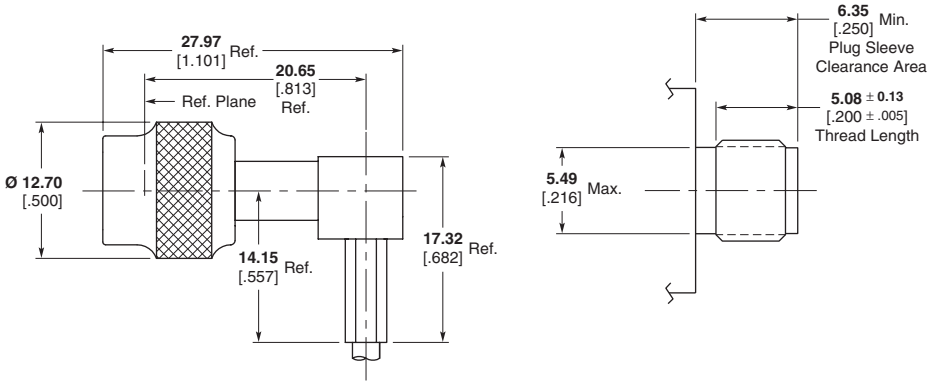

Cable Type RG/U	Body Material & Finish	Contact Captivation	Contact Attachment	Part No.
316	Beryllium Copper, Gold	Mechanical	Solder/Crimp	**1274694-1**

Note: Part Numbers are RoHS compliant except: ♦ Indicates non-RoHS compliant.

Catalog 1307191
Revised 3-07

www.tycoelectronics.com

Dimensions are in millimeters and inches unless otherwise specified. Values in brackets are standard equivalents.

Dimensions are shown for reference purposes only. Specifications subject to change.

USA: 1-800-522-6752
Canada: 1-905-470-4425
Mexico: 01-800-733-8926
C. America: 52-55-1106-0803

South America: 55-11-2103-6000
Hong Kong: 852-2735-1628
Japan: 81-44-844-8013
UK: 44-8706-080-208

SMA Connectors (Continued)
Direct Solder Attachment, Semi-Rigid Cable

Straight Cable Plug



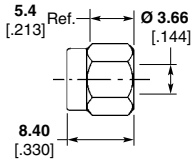

Cable Type RG/U	Body Material & Finish	Contact Captivation	Contact Attachment	Solder Assembly Kit Part No.	Instruction Sheet	Part No.
402 (3.58 [.141])	Stainless, Pass.	No Center Contact	No Center Contact	1055420-1	408-4761	**1050757-1**

Straight Cable Plug



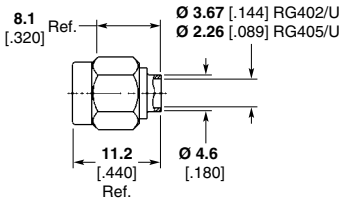

Cable Type RG/U	Body Material & Finish	Contact Captivation	Contact Attachment	Solder Assembly Kit Part No.	Instruction Sheet	Part No.
402 (3.58 [.141])	Stainless, Gold[1]	No	Solder	1055420-1	408-4764	**1050525-1**
405 (2.16 [.085])	Stainless, Gold[1]	No	Solder	1055420-1	408-4765	**1050770-1**
402 (3.58 [.141])	Stainless, Gold[1]	No Center Contact	No Center Contact	N/A	—	**1050542-1**
405 (2.16 [.085])	Stainless, Gold[1]	No	Solder	1055420-1	—	**1050548-1**

[1]Coupling nut is passivated stainless steel.

Straight Cable Jack



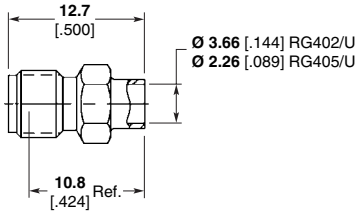

Cable Type RG/U	Body Material & Finish	Contact Captivation	Contact Attachment	Solder Assembly Kit Part No.	Instruction Sheet	Part No.
402 (3.58 [.141])	Stainless, Gold	No	Solder	1055420-1	408-4767	**1050854-1**
405 (2.16 [.085])	Stainless, Gold	No	Solder	1055420-1	408-4833	**1050859-1**

Note: Part Numbers are RoHS compliant except: ♦ Indicates non-RoHS compliant.

Catalog 1307191
Revised 3-07

www.tycoelectronics.com

Dimensions are in millimeters and inches unless otherwise specified. Values in brackets are standard equivalents.

Dimensions are shown for reference purposes only. Specifications subject to change.

USA: 1-800-522-6752
Canada: 1-905-470-4425
Mexico: 01-800-733-8926
C. America: 52-55-1106-0803

South America: 55-11-2103-6000
Hong Kong: 852-2735-1628
Japan: 81-44-844-8013
UK: 44-8706-080-208

SMA Connectors (Continued)
Direct Solder Attachment, Semi-Rigid Cable (Continued)

Bulkhead Cable Jack



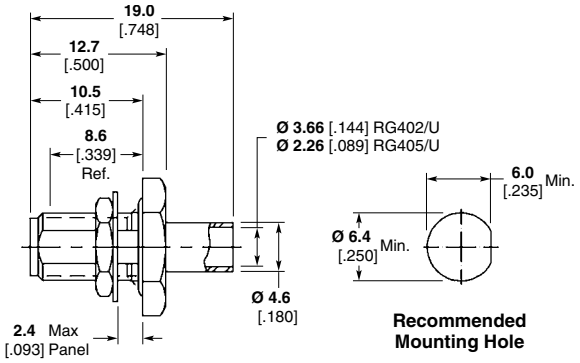

Cable Type RG/U	Body Material & Finish	Contact Captivation	Contact Attachment	Solder Assembly Kit Part No.	Instruction Sheet	Part No.
402 (3.58 [.141])	Brass, Gold	No	Solder	1055420-1	408-4768	**1082029-1**

2 Hole Flange Mount Cable Jack



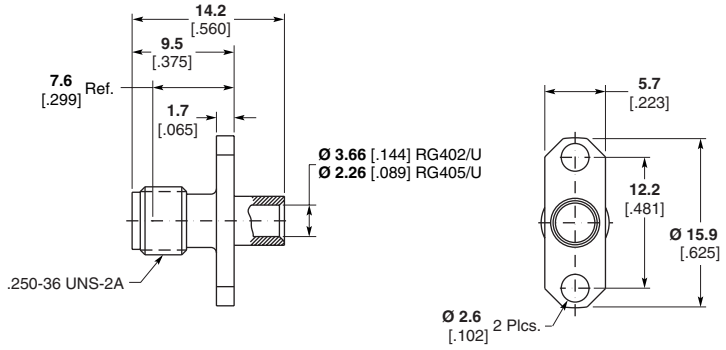

Cable Type RG/U	Body Material & Finish	Contact Captivation	Contact Attachment	Solder Assembly Kit Part No.	Instruction Sheet	Part No.
402 (3.58 [.141])	Stainless, Gold	No	Solder	1055420-1	408-4767	**1051052-1**
405 (2.16 [.085])	Stainless, Gold	No	Solder	1055420-1	408-4883	**1051046-1**

4 Hole Flange Mount Cable Jack



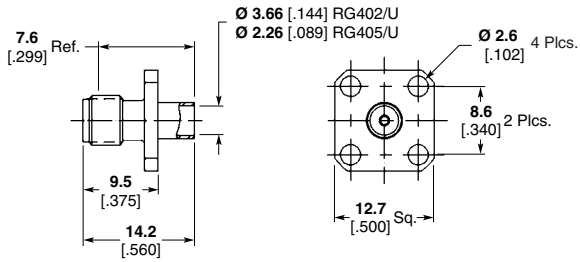

Cable Type RG/U	Body Material & Finish	Contact Captivation	Contact Attachment	Solder Assembly Kit Part No.	Instruction Sheet	Part No.
402 (3.58 [.141])	Stainless, Gold	No	Solder	1055420-1	408-4767	**1051081-1**
405 (2.16 [.085])	Stainless, Gold	No	Solder	1055420-1	408-4883	**1051085-1**

Note: Part Numbers are RoHS compliant except: ♦ Indicates non-RoHS compliant.

Catalog 1307191
Revised 3-07

www.tycoelectronics.com

Dimensions are in millimeters and inches unless otherwise specified. Values in brackets are standard equivalents.

Dimensions are shown for reference purposes only. Specifications subject to change.

USA: 1-800-522-6752
Canada: 1-905-470-4425
Mexico: 01-800-733-8926
C. America: 52-55-1106-0803

South America: 55-11-2103-6000
Hong Kong: 852-2735-1628
Japan: 81-44-844-8013
UK: 44-8706-080-208

SMA Connectors (Continued)
Semi-Rigid Cable

Right-Angle Cable Plug, Direct Solder Attachment



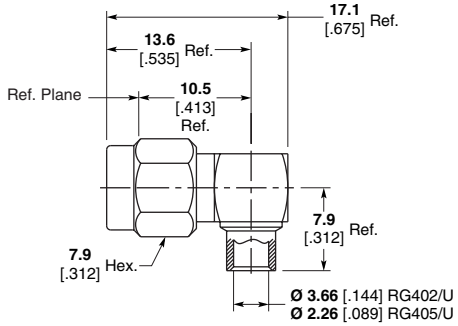

Cable Type RG/U	Body Material & Finish	Contact Captivation	Contact Attachment	Solder Assembly Kit Part No.	Instruction Sheet	Part No.
402 (3.58 [.141])	Stainless, Gold[1]	Epoxy	Solder	1055420-1	408-4831	**1051151-1**
405 (2.16 [.085])	Stainless, Gold[1]	Epoxy	Solder	1055420-1	408-4831	**1051157-1**
405 (2.16 [.085])	Brass, Gold	Mechanical	Solder	1055420-1	408-4831	**1088312-1**

[1]Coupling nut is passivated stainless steel.

Straight Cable Plug, Crimp



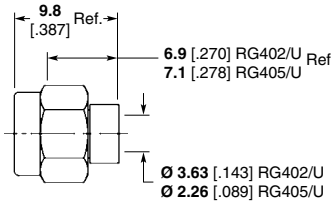

Cable Type RG/U	Body Material & Finish	Contact Captivation	Contact Attachment	Crimp Tooling Part No.	Instruction Sheet	Part No.
405 (2.16 [.085])	Stainless, Pass.	Mechanical	Solderless	1055835-1	408-4695	**1050598-1**
402 (3.58 [.141])	Stainless, Pass.	No Center Contact	Solderless	1055835-1	408-4690	**1050740-1**

Straight Cable Plug — Low Profile, Crimp



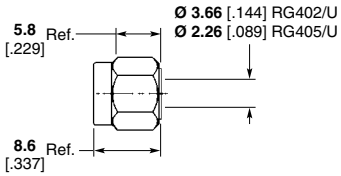

Cable Type RG/U	Body Material & Finish	Contact Captivation	Contact Attachment	Crimp Tooling Part No.	Instruction Sheet	Part No.
402 (3.58 [.141])	Stainless, Pass.	Mechanical	Solderless	1055835-1	408-4696	**1050602-1**
405 (2.16 [.085])	Stainless, Pass.	Mechanical	Solderless	1055835-1	408-4697	**1050611-1**

Note: Part Numbers are RoHS compliant except: ♦ Indicates non-RoHS compliant.

Catalog 1307191
Revised 3-07

www.tycoelectronics.com

Dimensions are in millimeters and inches unless otherwise specified. Values in brackets are standard equivalents.

Dimensions are shown for reference purposes only. Specifications subject to change.

USA: 1-800-522-6752
Canada: 1-905-470-4425
Mexico: 01-800-733-8926
C. America: 52-55-1106-0803

South America: 55-11-2103-6000
Hong Kong: 852-2735-1628
Japan: 81-44-844-8013
UK: 44-8706-080-208

SMA Connectors (Continued)
Semi-Rigid Cable (Continued)

2 Hole Flange, Crimp



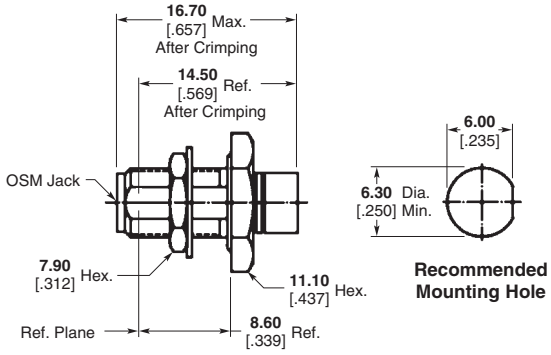

Cable Type RG/U	Body Material & Finish	Contact Captivation	Contact Attachment	Crimp Tooling Part No.	Instruction Sheet	Part No.
402 (3.58 [.141])	Stainless, Pass.	Mechanical	Solderless	1055835-1	408-4954	**1051005-1**
405 (2.16 [.085])	Stainless, Pass.	Mechanical	Solderless	1055835-1	408-4689	**1051007-1**

Right-Angle Cable Plug, Crimp



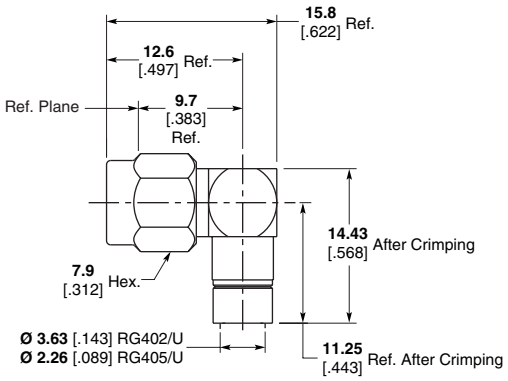

Cable Type RG/U	Body Material & Finish	Contact Captivation	Contact Attachment	Crimp Tooling Part No.	Instruction Sheet	Part No.
402 (3.58 [.141])	Stainless, Pass.	Mechanical	Solderless	1055835-1	408-4691	**1051145-1**
405 (2.16 [.085])	Stainless, Pass.	Mechanical	Solderless	1055835-1	408-4692	**1051147-1**

Note: Part Numbers are RoHS compliant except: ♦ Indicates non-RoHS compliant.

Catalog 1307191
Revised 3-07

www.tycoelectronics.com

Dimensions are in millimeters and inches unless otherwise specified. Values in brackets are standard equivalents.

Dimensions are shown for reference purposes only. Specifications subject to change.

USA: 1-800-522-6752
Canada: 1-905-470-4425
Mexico: 01-800-733-8926
C. America: 52-55-1106-0803

South America: 55-11-2103-6000
Hong Kong: 852-2735-1628
Japan: 81-44-844-8013
UK: 44-8706-080-208

SMA Connectors (Continued)
Panel Mount, Solder Pot Terminal

4 Hole Flange Mount Plug Receptacle



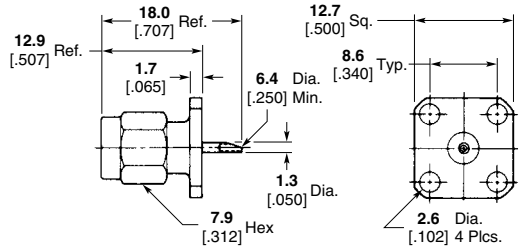

Body Material & Finish	Contact Captivation	RF Leakage db min.	Temperature Range	Part No.
Stainless, Passivated	Epoxy	N/A	-65 to 125° C	**1052324-1**

4 Hole Flange Mount Jack Receptacle



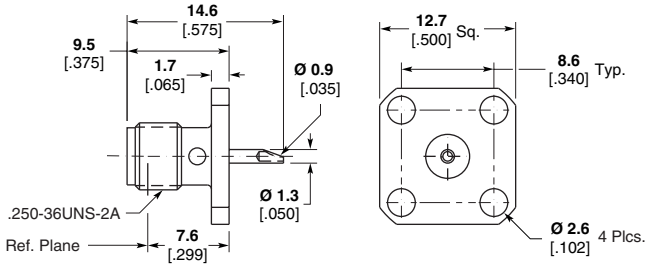

Body Material & Finish	Contact Captivation	RF Leakage db min.	Temperature Range	Part No.
Stainless, Passivated	Epoxy	-(60-fGHz)	-65 to 125° C	**1052422-1**

2 Hole Flange Mount Jack Receptacle



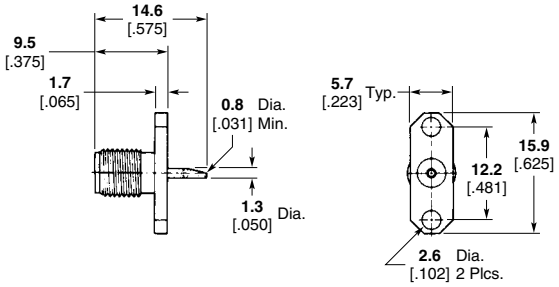

Body Material & Finish	Contact Captivation	RF Leakage db min.	Temperature Range	Part No.
Stainless, Passivated	Epoxy	-(60-fGHz)	-65 to 125° C	**1052544-1**

2 Hole Flange Mount Jack Receptacle



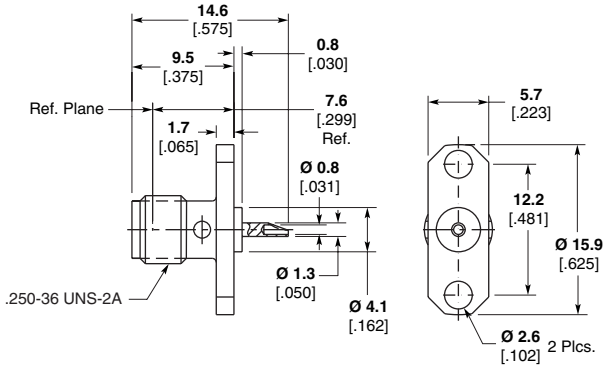

Body Material & Finish	Contact Captivation	RF Leakage db min.	Temperature Range	Part No.
Stainless, Passivated	Epoxy	-(60-fGHz)	-65 to 125° C	**1052534-1**

Note: Part Numbers are RoHS compliant except: ♦ Indicates non-RoHS compliant.

Catalog 1307191
Revised 3-07

www.tycoelectronics.com

Dimensions are in millimeters and inches unless otherwise specified. Values in brackets are standard equivalents.

Dimensions are shown for reference purposes only. Specifications subject to change.

USA: 1-800-522-6752
Canada: 1-905-470-4425
Mexico: 01-800-733-8926
C. America: 52-55-1106-0803

South America: 55-11-2103-6000
Hong Kong: 852-2735-1628
Japan: 81-44-844-8013
UK: 44-8706-080-208

SMA Connectors (Continued)
Panel Mount

Bulkhead Feedthrough Jack Receptacle, Solder Pot Terminal



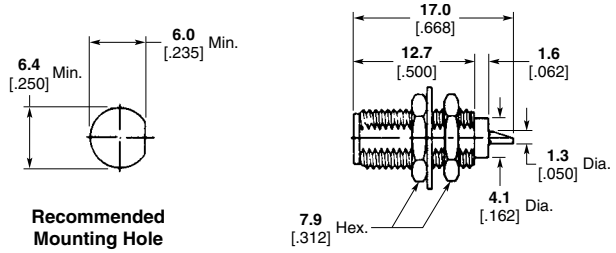

Body Material & Finish	Contact Captivation	RF Leakage db min.	Temperature Range	Part No.
Stainless, Passivated	Epoxy	N/A	-65 to 125° C	**1053092-1**

Press-In Jacks, Straight Terminal

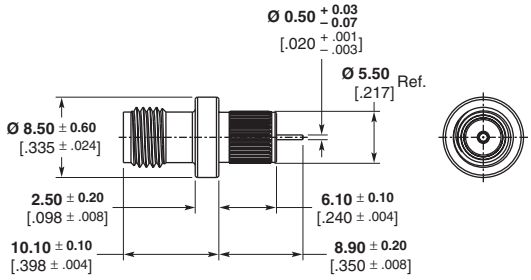

Part Number 1460468

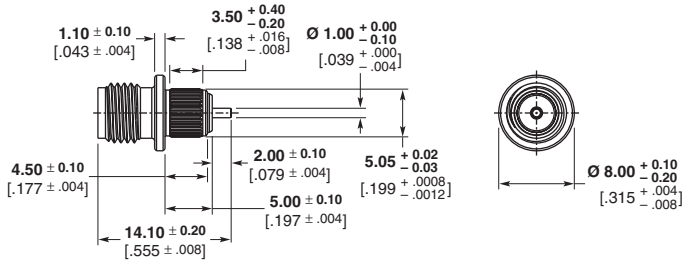

Part Number 1460469

Body Material & Finish	Contact Captivation	RF Leakage db min.	Temperature Range	Part No.
Brass, White Bronze	Mechanical	N/A	–65 to 125° C	**1460468-1**
Brass, Gold	Mechanical	N/A	–65 to 125° C	**1460469-1**

Press-In Cable, Jack Panel

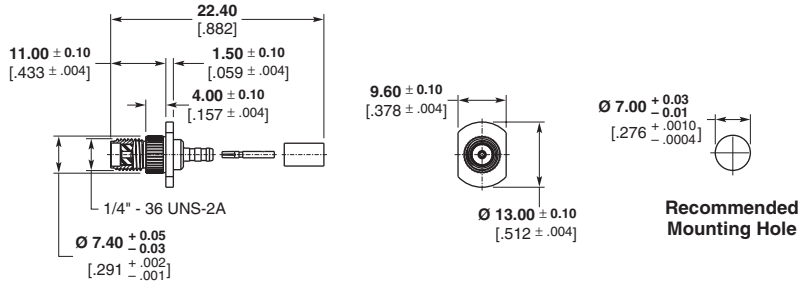

Cable Type RG/U	Body Material & Finish	Contact Captivation	Temperature Range	Part No.
316 D	Brass, Gold	Mechanical	–65 to 125° C	**619115-1**

Note: Part Numbers are RoHS compliant except: ♦ Indicates non-RoHS compliant.

Catalog 1307191
Revised 3-07

www.tycoelectronics.com

Dimensions are in millimeters and inches unless otherwise specified. Values in brackets are standard equivalents.

Dimensions are shown for reference purposes only. Specifications subject to change.

USA: 1-800-522-6752
Canada: 1-905-470-4425
Mexico: 01-800-733-8926
C. America: 52-55-1106-0803

South America: 55-11-2103-6000
Hong Kong: 852-2735-1628
Japan: 81-44-844-8013
UK: 44-8706-080-208

SMA Connectors (Continued)
Panel Mount, Straight Terminal

4 Hole Flange Mount Jack Receptacle



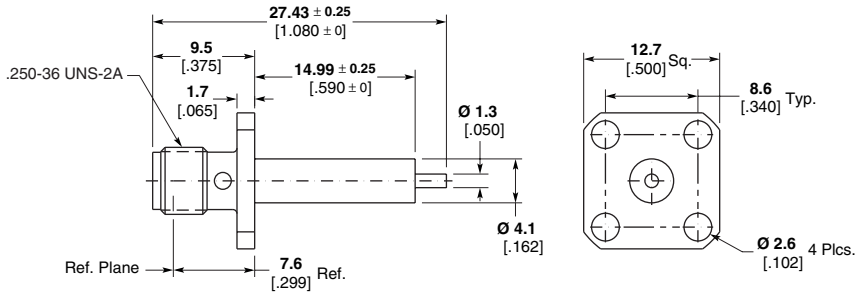

Body Material & Finish	Contact Captivation	RF Leakage db min.	Temperature Range	Part No.
Stainless, Passivated	None	-(100-fGHz)	-65 to 165° C	**1052518-1**
Stainless, Passivated	Epoxy	-(60-fGHz)	-65 to 125° C	**1052523-1**
Stainless, Gold	Epoxy	-(60-fGHz)	-65 to 125° C	**1052522-1**

2 Hole Flange Mount Plug Receptacle



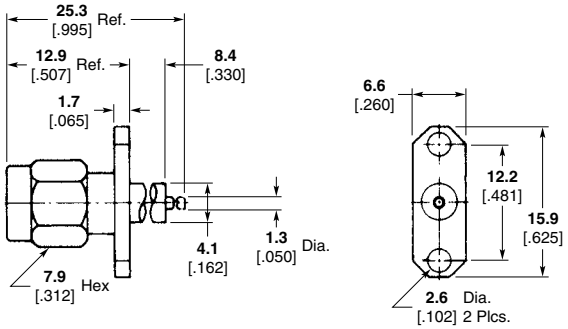

Body Material & Finish	Contact Captivation	RF Leakage db min.	Temperature Range	Part No.
Stainless, Passivated	Epoxy	-(60-fGHz)	-65 to 125° C	**1052349-1**

2 Hole Flange Mount Jack Receptacle



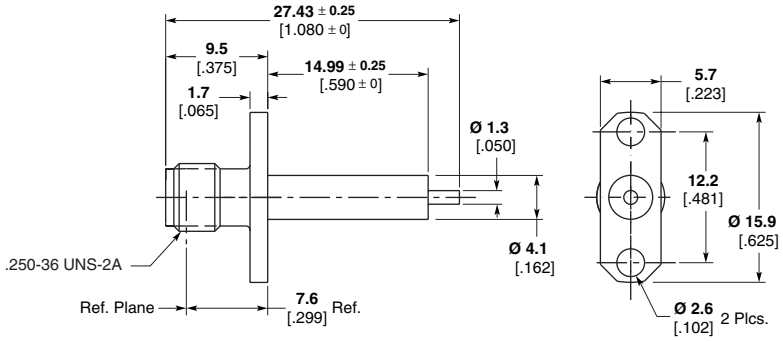

Body Material & Finish	Contact Captivation	RF Leakage db min.	Temperature Range	Part No.
Stainless, Passivated	Epoxy	-(60-fGHz)	-65 to 125° C	**1052552-1**

Note: Part Numbers are RoHS compliant except: ♦ Indicates non-RoHS compliant.

Catalog 1307191
Revised 3-07

www.tycoelectronics.com

Dimensions are in millimeters and inches unless otherwise specified. Values in brackets are standard equivalents.

Dimensions are shown for reference purposes only. Specifications subject to change.

USA: 1-800-522-6752
Canada: 1-905-470-4425
Mexico: 01-800-733-8926
C. America: 52-55-1106-0803

South America: 55-11-2103-6000
Hong Kong: 852-2735-1628
Japan: 81-44-844-8013
UK: 44-8706-080-208

SMA Connectors (Continued)
Panel Mount, Straight Terminal (Continued)

Bulkhead Feedthrough Jack Receptacle



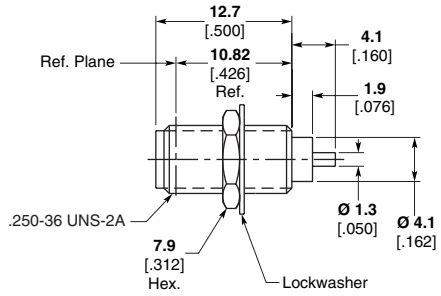

Body Material & Finish	Contact Captivation	RF Leakage db min.	Temperature Range	Part No.
Stainless, Passivated	Epoxy	-(60-fGHz)	-65 to 125° C	**1053222-1**

2 Hole Flange Mount Right-Angle Jack Receptacle



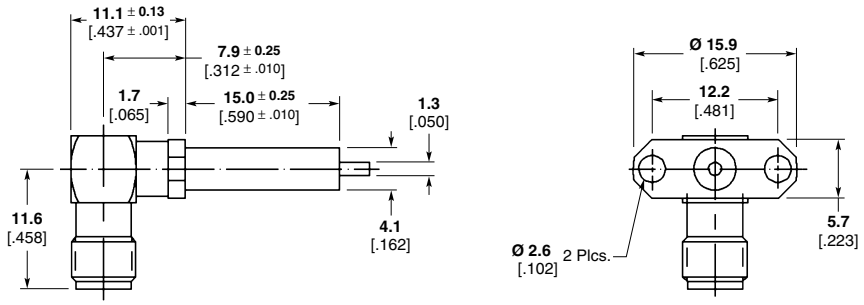

Body Material & Finish	Contact Captivation	RF Leakage db min.	Temperature Range	Part No.
Stainless, Passivated	Mechanical	-(90-fGHz)	-65 to 165° C	**1052986-1**

4 Hole Flange Mount Right-Angle Jack Receptacle

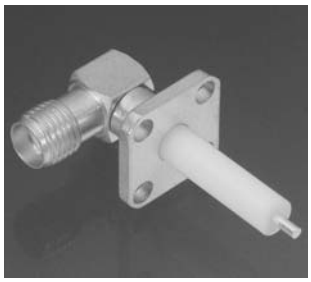

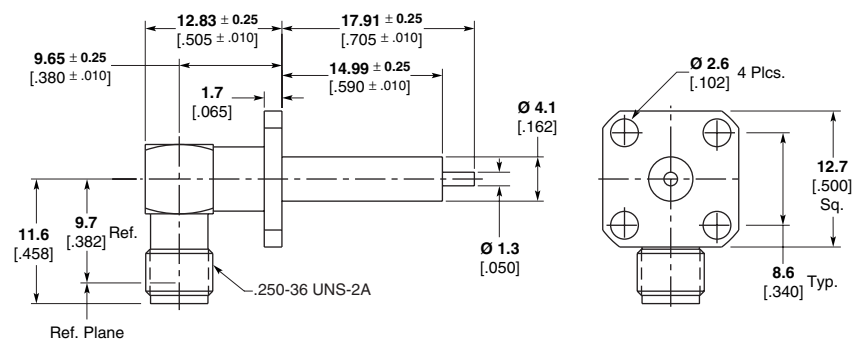

Body Material & Finish	Contact Captivation	RF Leakage db min.	Temperature Range	Part No.
Stainless, Passivated	Mechanical	-(90-fGHz)	-65 to 165° C	**1052978-1**
Stainless, Passivated	Mechanical	-(90-fGHz)	-65 to 165° C	**1052982-1**

Note: Part Numbers are RoHS compliant except: 1Indicates non-RoHS compliant.

Catalog 1307191
Revised 3-07

www.tycoelectronics.com

Dimensions are in millimeters and inches unless otherwise specified. Values in brackets are standard equivalents.

Dimensions are shown for reference purposes only. Specifications subject to change.

USA: 1-800-522-6752
Canada: 1-905-470-4425
Mexico: 01-800-733-8926
C. America: 52-55-1106-0803

South America: 55-11-2103-6000
Hong Kong: 852-2735-1628
Japan: 81-44-844-8013
UK: 44-8706-080-208

SMA Connectors (Continued)
Panel Mount

4 Hole Flange Mount Jack Receptacle, Straight Terminal



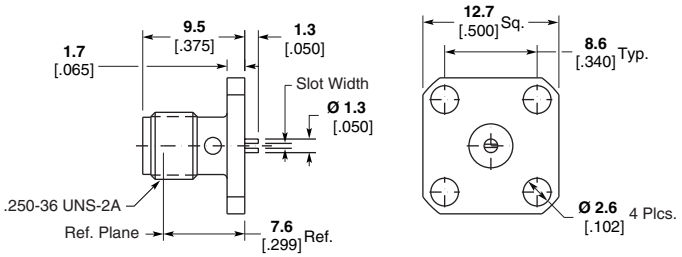

Body Material & Finish	Contact Captivation	Slot Width +.076/-.025 [+.003/-.001]	RF Leakage db min.	Temperature Range	Part No.
Stainless, Passivated	Epoxy	0.5 [.018]	-(60-fGHz)	-65 to 125° C	**1052563-1**

4 Hole Flange Mount Plug Receptacle, Tab Terminal



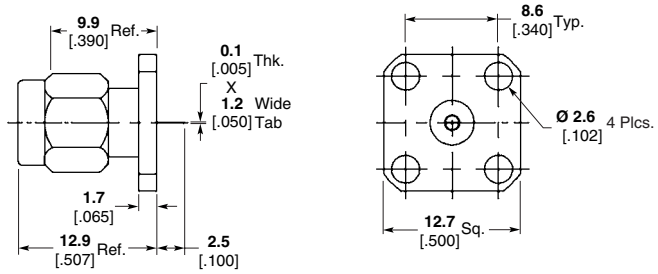

Body Material & Finish	Contact Captivation	Tab Width	RF Leakage db min.	Temperature Range	Part No.
Stainless, Passivated	Epoxy	1.3 [.050]	-(60-fGHz)	-65 to 125° C	**1052360-1**

4 Hole Flange Mount Jack Receptacle, Tab Terminal



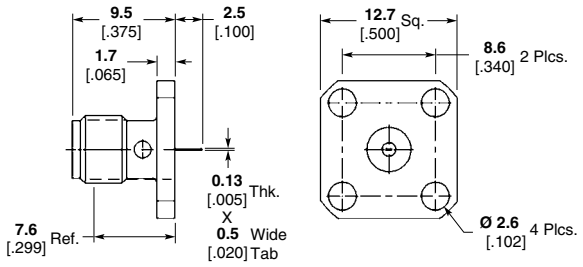

Body Material & Finish	Contact Captivation	Tab Width	RF Leakage db min.	Temperature Range	Part No.
Stainless, Passivated	Epoxy	.51 [.020]	-(60-fGHz)	-65 to 125° C	**1052898-1**

Note: Part Numbers are RoHS compliant except: ♦ Indicates non-RoHS compliant.

Catalog 1307191
Revised 3-07

www.tycoelectronics.com

Dimensions are in millimeters and inches unless otherwise specified. Values in brackets are standard equivalents.

Dimensions are shown for reference purposes only. Specifications subject to change.

USA: 1-800-522-6752
Canada: 1-905-470-4425
Mexico: 01-800-733-8926
C. America: 52-55-1106-0803

South America: 55-11-2103-6000
Hong Kong: 852-2735-1628
Japan: 81-44-844-8013
UK: 44-8706-080-208

SMA Connectors (Continued)

2 Hole Flange Mount Jack Receptacle, Panel Mount, Tab Terminal



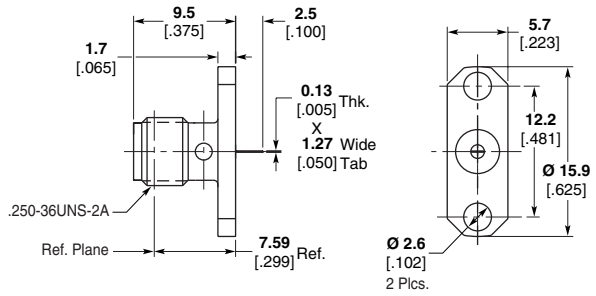

Body Material & Finish	Contact Captivation	Horizontal Tab	RF Leakage db min.	Temperature Range	Part No.
Stainless, Passivated	Epoxy	✓	-(60-fGHz)	-65 to 125° C	**1052577-1**

4 Hole Flange Mount Jack Receptacle, for Microstrip Transmission Line Circuits



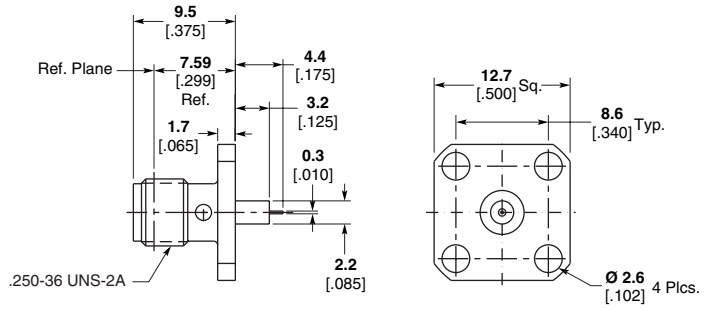

Body Material & Finish	Contact Captivation	RF Leakage db min.	Temperature Range	Part No.
Stainless, Passivated	Epoxy	-(60-fGHz)	-65 to 125° C	**1052528-1**

2 Hole Flange Mount Jack Receptacle, for Microstrip Transmission Line Circuits



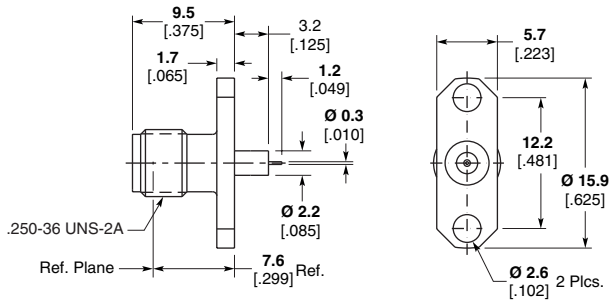

Body Material & Finish	Contact Captivation	RF Leakage db min.	Temperature Range	Part No.
Stainless, Passivated	Epoxy	-(60-fGHz)	-65 to 125° C	**1052902-1**

Note: Part Numbers are RoHS compliant except: ♦ Indicates non-RoHS compliant.

Catalog 1307191
Revised 3-07

www.tycoelectronics.com

Dimensions are in millimeters and inches unless otherwise specified. Values in brackets are standard equivalents.

Dimensions are shown for reference purposes only. Specifications subject to change.

USA: 1-800-522-6752
Canada: 1-905-470-4425
Mexico: 01-800-733-8926
C. America: 52-55-1106-0803

South America: 55-11-2103-6000
Hong Kong: 852-2735-1628
Japan: 81-44-844-8013
UK: 44-8706-080-208

SMA Connectors (Continued)
Field Replaceable Hermetic Launchers (Continued)

4 Hole Flange Mount Jack Receptacle with EMI/RFI Gasket



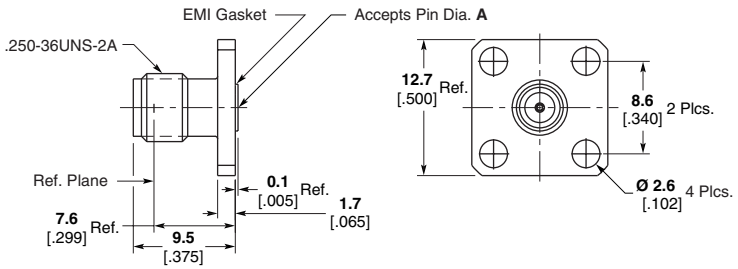

Material & Finish	Captivation	Pin Diameter A	Part No.
Stainless, Passivated	Mechanical	.38 [.015]	**1052684-1**

4 Hole Flange Mount Jack Receptacle without EMI/RFI Gasket



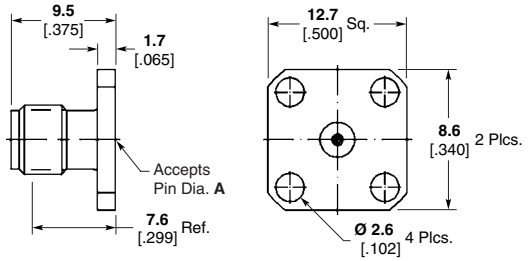

Material & Finish	Captivation	Pin Diameter A	Part No.
Stainless, Passivated	Mechanical	.91 [.036]	**1052643-1**

2 Hole Flange Mount Jack Receptacle with EMI/RFI Gasket



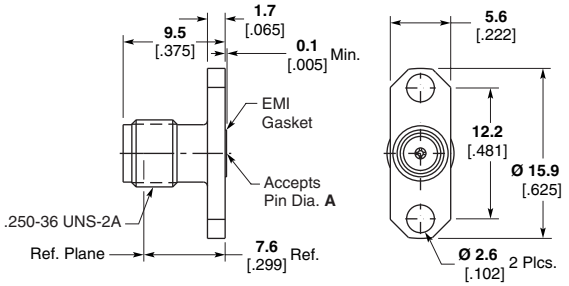

Material & Finish	Captivation	Pin Diameter A	Part No.
Stainless, Passivated	Mechanical	.30 [.012]	**1052628-1**
Stainless, Passivated	Mechanical	.38 [.015]	**1052689-1**
Stainless, Passivated	Mechanical	.46 [.018]	**1052634-1**

2 Hole Flange Mount Jack Receptacle without EMI/RFI Gasket, Field Replaceable Hermetic Launchers



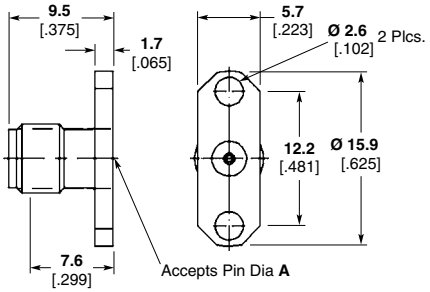

Material & Finish	Captivation	Pin Diameter A	Part No.
Stainless, Passivated	Mechanical	.51 [.020]	**1052652-1**
Stainless, Passivated	Mechanical	.91 [.036]	**1052646-1**

Note: Part Numbers are RoHS compliant except: ♦ Indicates non-RoHS compliant.

Catalog 1307191
Revised 3-07

www.tycoelectronics.com

Dimensions are in millimeters and inches unless otherwise specified. Values in brackets are standard equivalents.

Dimensions are shown for reference purposes only. Specifications subject to change.

USA: 1-800-522-6752
Canada: 1-905-470-4425
Mexico: 01-800-733-8926
C. America: 52-55-1106-0803

South America: 55-11-2103-6000
Hong Kong: 852-2735-1628
Japan: 81-44-844-8013
UK: 44-8706-080-208

SMA Connectors (Continued)

PC Board Mount Vertical Jack



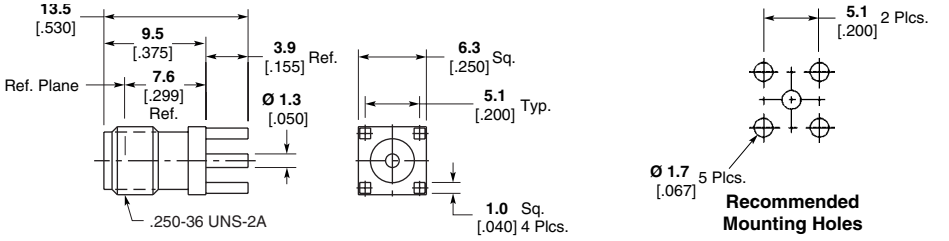

Style 1

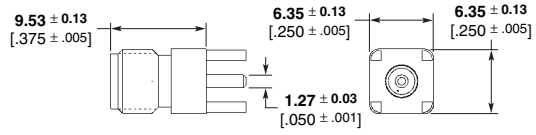

Style 2

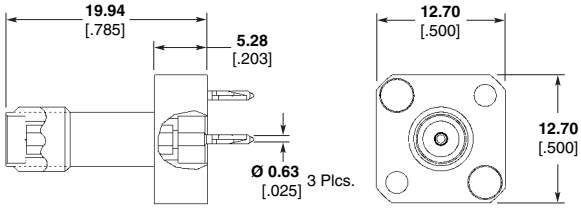

Style 3

Material & Finish	Style No.	Part No.
Stainless, Gold	1	**1053354-1**
Brass, Gold	2	**221789-1**
Brass, Gold	2	**221789-3**
Brass, Nickel Plate	3	**6274096-1**

PC Board Mount Right-Angle Jack



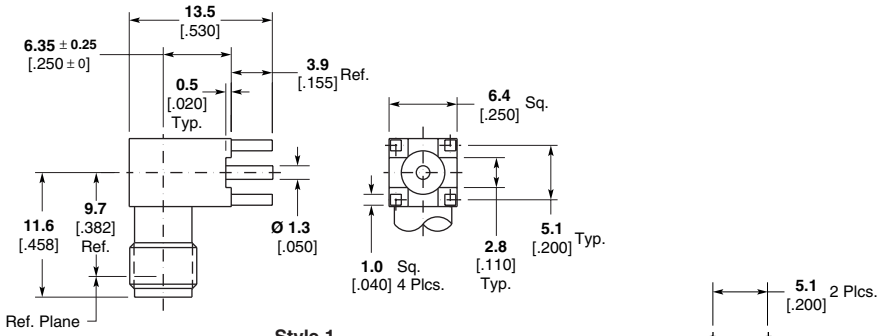

Style 1

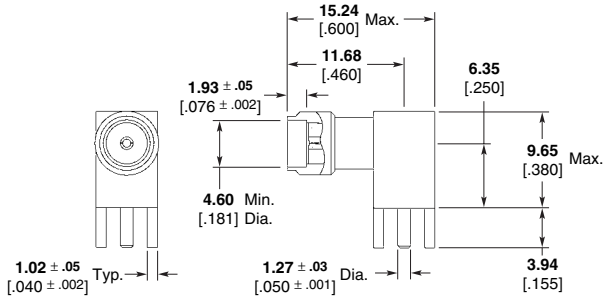

Style 2

Material & Finish	Style No.	Part No.
Stainless, Gold	1	**1053378-1**
Stainless, Gold	2	**221790-1**

Note: Part Numbers are RoHS compliant except: ♦ Indicates non-RoHS compliant.

Catalog 1307191
Revised 3-07

www.tycoelectronics.com

Dimensions are in millimeters and inches unless otherwise specified. Values in brackets are standard equivalents.

Dimensions are shown for reference purposes only. Specifications subject to change.

USA: 1-800-522-6752
Canada: 1-905-470-4425
Mexico: 01-800-733-8926
C. America: 52-55-1106-0803

South America: 55-11-2103-6000
Hong Kong: 852-2735-1628
Japan: 81-44-844-8013
UK: 44-8706-080-208

SMA Connectors (Continued)

In-Series Adapter, Jack to Jack



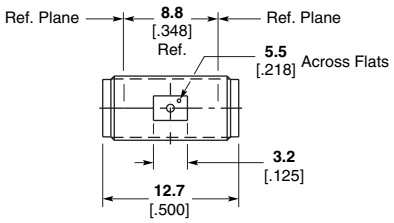

Frequency	Material & Finish	Captivation	Part No.
DC-18.0GHz	Stainless, Gold	Epoxy*	**1053488-1**

In-Series Adapter, Plug to Plug



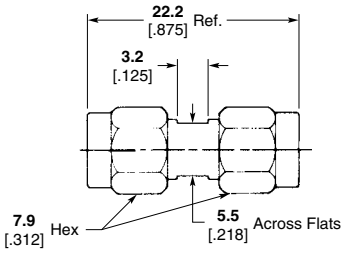

Frequency	Material & Finish	Captivation	Part No.
DC-18.0GHz	Stainless, Passivated	Epoxy*	**1053635-1**

*All adapters listed above employ epoxy captivation. Mechanically captivated versions are also available. Please consult Tyco Electronics.

In-Series Adapter, Jack to Plug, Right-Angle



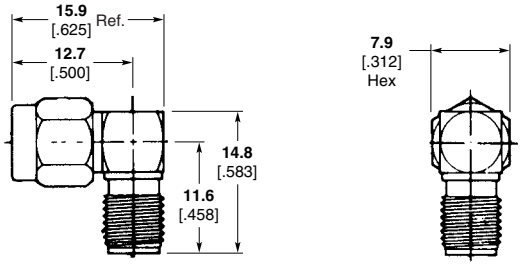

Frequency	Material & Finish	Captivation	Part No.
DC-12.4GHz	Stainless, Passivated	Mechanical	**1055065-1**

In-Series Adapter, Jack to Jack, Right-Angle



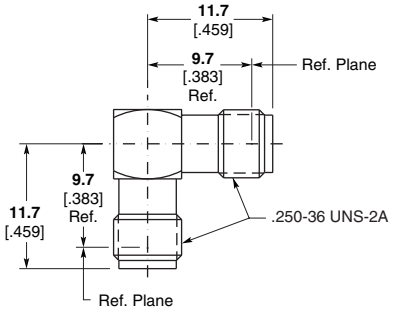

Frequency	Material & Finish	Captivation	Part No.
DC-12.4GHz	Stainless, Passivated	Mechanical	**1055018-1**

Note: Part Numbers are RoHS compliant except: ♦ Indicates non-RoHS compliant.

Catalog 1307191
Revised 3-07

www.tycoelectronics.com

Dimensions are in millimeters and inches unless otherwise specified. Values in brackets are standard equivalents.

Dimensions are shown for reference purposes only. Specifications subject to change.

USA: 1-800-522-6752
Canada: 1-905-470-4425
Mexico: 01-800-733-8926
C. America: 52-55-1106-0803

South America: 55-11-2103-6000
Hong Kong: 852-2735-1628
Japan: 81-44-844-8013
UK: 44-8706-080-208

SMA Connectors (Continued)

In-Series Adapter, Plug to Plug, Right-Angle



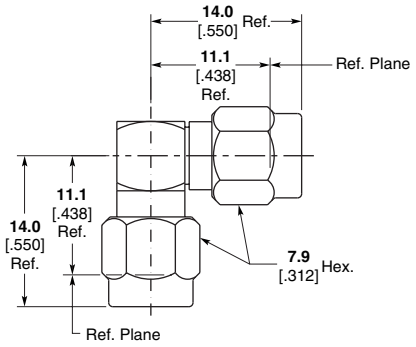

Frequency	Material & Finish	Captivation	Part No.
DC-18.0GHz	Stainless, Passivated	Mechanical	**1055047-1**

In-Series Adapter, Jack to Plug, Connector Saver



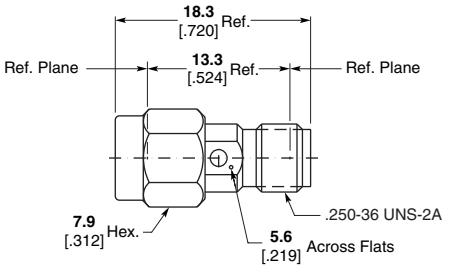

Frequency	Material & Finish	Captivation	Part No.
DC-18.0GHz	Stainless, Passivated	Epoxy	**1054426-1**

In-Series Adapter, Jack to Jack, Bulkhead Feedthrough



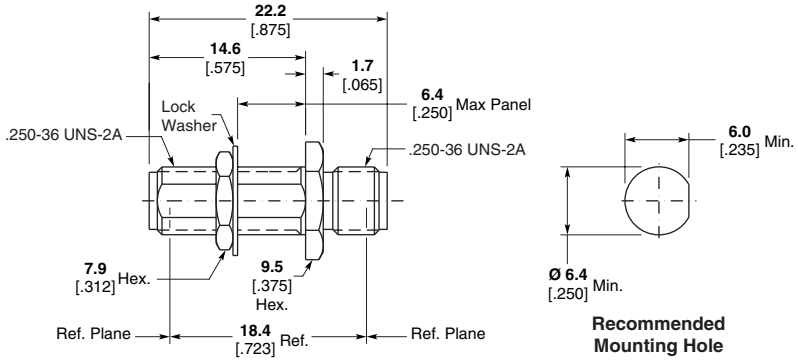

Frequency	Material & Finish	Captivation	Part No.
DC-18.0GHz	Stainless, Passivated	Epoxy*	**1054869-1**

*Mechanically captivated version available. Please consult Tyco Electronics.

Test Adapter, Plug to Jack, Quick Release

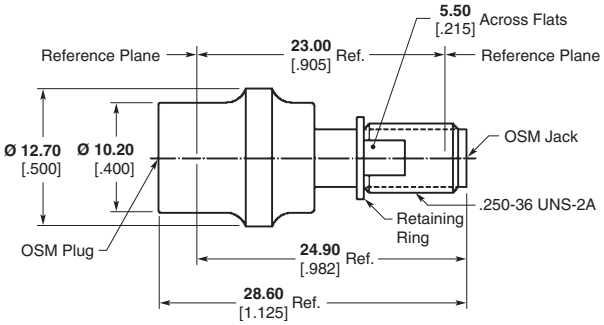

Frequency	Material & Finish	Captivation	Part No.
DC-18.0GHz	Stainless, Passivated	Epoxy	**1053780-1**

Note: Part Numbers are RoHS compliant except: ♦ Indicates non-RoHS compliant.

Catalog 1307191
Revised 3-07

www.tycoelectronics.com

Dimensions are in millimeters and inches unless otherwise specified. Values in brackets are standard equivalents.

Dimensions are shown for reference purposes only. Specifications subject to change.

USA: 1-800-522-6752
Canada: 1-905-470-4425
Mexico: 01-800-733-8926
C. America: 52-55-1106-0803

South America: 55-11-2103-6000
Hong Kong: 852-2735-1628
Japan: 81-44-844-8013
UK: 44-8706-080-208

QMA Connectors

Snap-On SMA Series of RF Connectors

Product Facts

- **Positive snap-on interface facilitates assembly**
- **Intermateable with competitor product**
- **Excellent RF performance to 6 GHz**
- **Ideal for Communications and Industrial Applications**



Tyco Electronics' next generation high performance RF products QMA (Snap-On SMA) connectors series offers the same high quality and performance currently found in the standard Tyco Electronics SMA series but does not require the coupling nut torque. By integrating a snap-on feature to the design, denser packaging can be achieved, and the overall applied cost is dramatically reduced. The QMA connector series is excellent for communications as well as industrial applications. The QMA offering is designed for 100 mating cycles, operates through 6 GHz, and is completely intermateable with competitive QMA offerings. This new QMA product is not intermateable with standard SMA interfaces.

QMA connectors are available in a broad range of standard configurations, including PCB and panel mount, flexible and semi-rigid cable, and adapters. Other options can be reviewed as well, including additional cable sizes, PCB surface mounting, and tape and reel packaging.

The QMA connector series is a cost effective solution for the challenging demands of today's commercial marketplace, with applications including cellular base station, handsets, and test and measurement. Call your local sales office or authorized distributor for additional information or samples of the QMA connector series.

Tyco Electronics is a leading supplier of RF and Microwave connectors and cable assemblies, and provides advanced technology products from well known and industry leading brands, including AMP and M/A-COM.

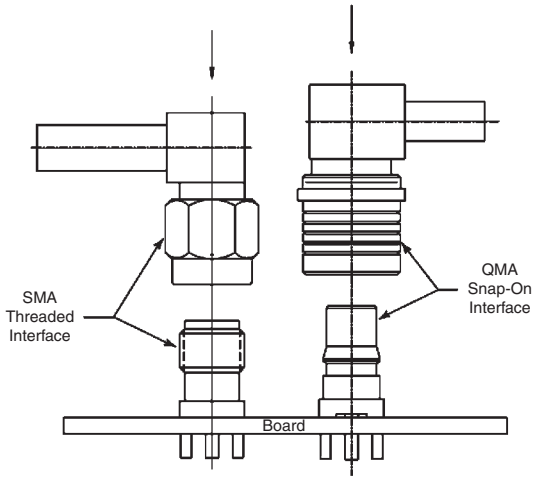

Material and Finish

Shells and Bodies — Brass, nickel plated

Collars — Phosphor bronze, white bronze plated

Outer Contacts — Beryllium copper, nickel plated

Center Contacts — Beryllium copper, gold plated

Dielectrics — PTFE

Electrical Characteristics

Frequency — dc – 6 GHz

Nominal Impedance — 50 ohms

Voltage Rating — 335 Volts (VRMS max.) @ Sea Level

VSWR — 1.15 : 1 max. @ 6 GHz

Insulation Resistance — 5,000 megohms min.

Insertion Loss — .25 dB Max @ 6 GHz

Dielectric Withstanding Voltage — 1000 Volts (VRMS max.) @ Sea Level

Contact Resistance — Center Contact — 5 milliohms max. Outer Contact — 4 milliohms max.

Mechanical Characteristics

Connector Durability — 100 mating cycles

Force to Engage — 27 Newtons

Force to Disengage — 20 Newtons

Retention Force (mated pair) — 60 Newtons min.

Cable Retention — Dependent upon cable type

Environmental Characteristics

Temperature Rating — -40 to +125°C

Vibration — EIA-364-28, Test Condition VII, Condition D

Shock — EIA-364-27, Method H

Moisture Resistance — EIA-364-31, Method III

Thermal Shock — EIA-364-32

Note: Performance specifications are typical, but may not apply to all connector types.

Related Product Data

Product Specifiation — 108-2087

Sample Kit — 1654882

Catalog 1307191
Revised 3-07

www.tycoelectronics.com

Dimensions are in millimeters and inches unless otherwise specified. Values in brackets are standard equivalents.

Dimensions are shown for reference purposes only. Specifications subject to change.

USA: 1-800-522-6752
Canada: 1-905-470-4425
Mexico: 01-800-733-8926
C. America: 52-55-1106-0803

South America: 55-11-2103-6000
Hong Kong: 852-2735-1628
Japan: 81-44-844-8013
UK: 44-8706-080-208

QMA Connectors (Continued)

Semi-Rigid Cable — Direct Solder Attachment

Straight Cable Plug



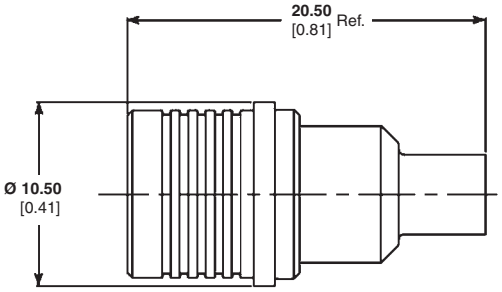

Cable	Part Number
RG 402	1408346-1

Right-Angle Cable Plug



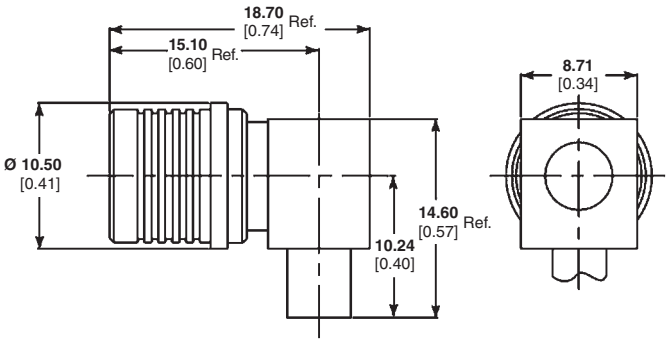

Cable	Part Number
RG 402	1408347-1

Straight Cable Jack



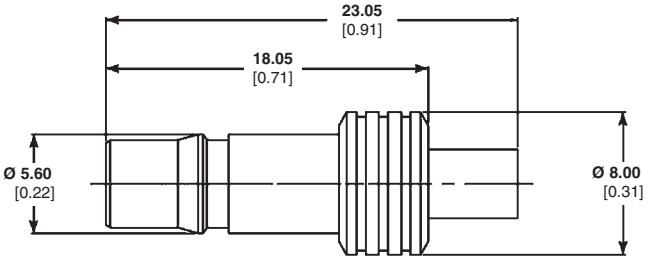

Cable	Part Number
RG 402	1408348-1

Bulkhead Cable Jack



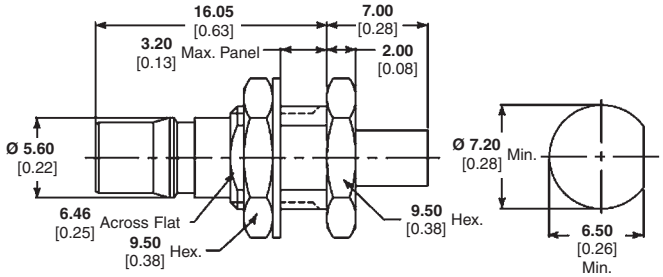

Recommended Mounting Hole

Cable	Part Number
RG 402	1408349-1

Note: Part Numbers are RoHS compliant except: ♦ Indicates non-RoHS compliant.

Catalog 1307191
Revised 3-07

www.tycoelectronics.com

Dimensions are in millimeters and inches unless otherwise specified. Values in brackets are standard equivalents.

Dimensions are shown for reference purposes only. Specifications subject to change.

USA: 1-800-522-6752
Canada: 1-905-470-4425
Mexico: 01-800-733-8926
C. America: 52-55-1106-0803

South America: 55-11-2103-6000
Hong Kong: 852-2735-1628
Japan: 81-44-844-8013
UK: 44-8706-080-208

QMA Connectors (Continued)

Flexible Cable — Crimp Attachment

Straight Cable Plug



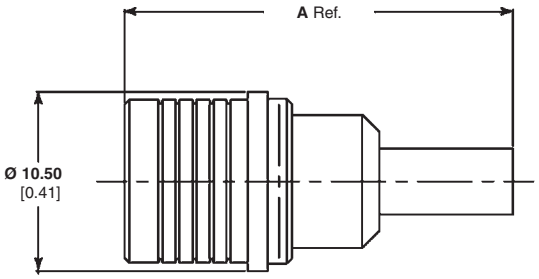

Cable	Dim. A	Part Number
RG 174, 188, 316	**22.90** 0.90	**1408333-1**
RD 316	**22.90** 0.90	**1408333-3**
RG 400	**25.20** 0.99	**1408333-5**
RG 58	**25.20** 0.99	**1408333-7**

Right-Angle Cable Plug



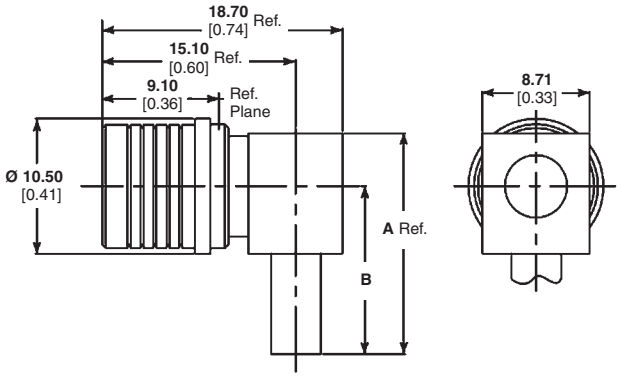

Cable	Dim. A	Dim. B	Part Number
RG 174, 188, 316	**17.20** 0.68	**13.10** 0.52	**1408336-1**
RD 316	**17.20** 0.68	**13.10** 0.52	**1408336-3**
RG 400	**19.50** 0.77	**15.40** 0.61	**1408336-5**
RG 58	**19.50** 0.77	**15.40** 0.61	**1408336-7**

Straight Cable Jack



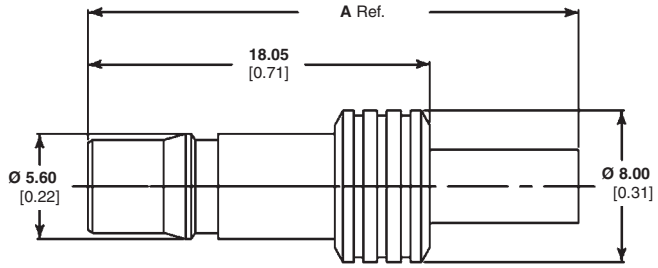

Cable	Dim. A	Part Number
RG 174, 188, 316	**25.90** 1.02	**1408338-1**
RD 316	**25.90** 1.02	**1408338-3**
RG 400	**28.20** 1.11	**1408338-5**
RG 58	**28.20** 1.11	**1408338-7**

Bulkhead Cable Jack



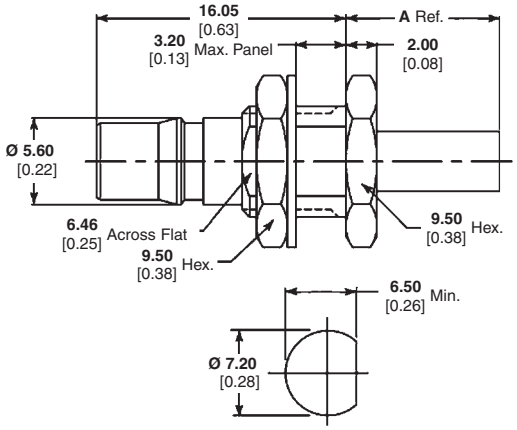

Recommended Mounting Hole

Cable	Dim. A	Part Number
RG 174, 188, 316	**9.90** 0.39	**1408339-1**
RD 316	**9.90** 0.39	**1408339-3**
RG 400	**12.20** 0.48	**1408339-5**
RG 58	**12.20** 0.48	**1408339-7**

Note: Part Numbers are RoHS compliant except: ♦ Indicates non-RoHS compliant.

Catalog 1307191
Revised 3-07

www.tycoelectronics.com

Dimensions are in millimeters and inches unless otherwise specified. Values in brackets are standard equivalents.

Dimensions are shown for reference purposes only. Specifications subject to change.

USA: 1-800-522-6752
Canada: 1-905-470-4425
Mexico: 01-800-733-8926
C. America: 52-55-1106-0803

South America: 55-11-2103-6000
Hong Kong: 852-2735-1628
Japan: 81-44-844-8013
UK: 44-8706-080-208

QMA Connectors (Continued)

Printed Circuit Board

Straight Jack Receptacle



Part Number
1408332-1

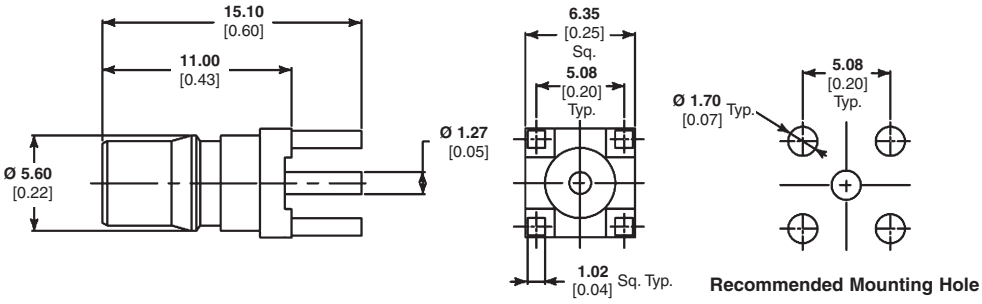

Right-Angle Jack Receptacle



Part Number
1408337-1

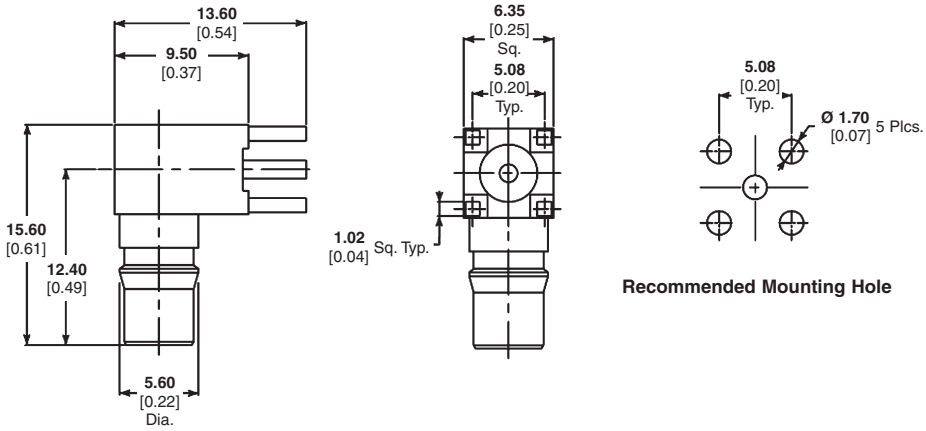

Straight Terminal Press-In Jack



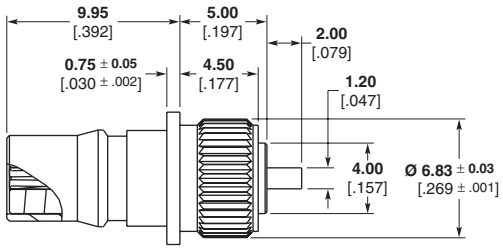

Body Material & Finish	Contact Captivation	RF Leakage db min.	Temperature Range	Part No.
Brass, Gold	Mechanical	N/A	–65 to 125° C	619215-1

Note: Part Numbers are RoHS compliant except: 1Indicates non-RoHS compliant.

Catalog 1307191
Revised 3-07

www.tycoelectronics.com

Dimensions are in millimeters and inches unless otherwise specified. Values in brackets are standard equivalents.

Dimensions are shown for reference purposes only. Specifications subject to change.

USA: 1-800-522-6752
Canada: 1-905-470-4425
Mexico: 01-800-733-8926
C. America: 52-55-1106-0803

South America: 55-11-2103-6000
Hong Kong: 852-2735-1628
Japan: 81-44-844-8013
UK: 44-8706-080-208

QMA Connectors (Continued)

Straight Terminal

4-Hole Flange Mount Jack Receptacle



Part Number
1408341-1

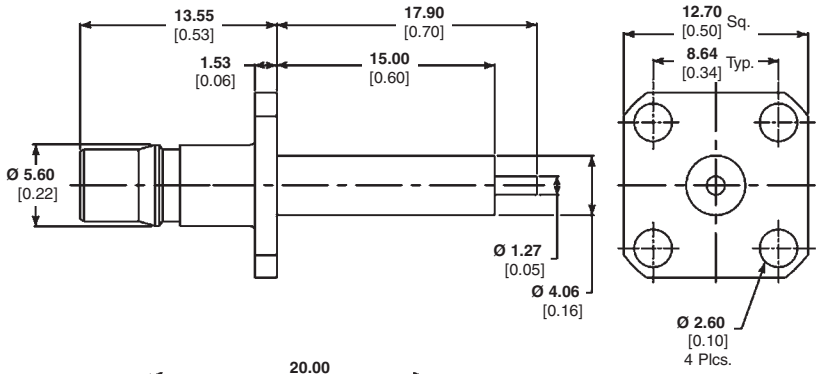

Screw-In Front Mount Jack Receptacle



Part Number
1408340-1

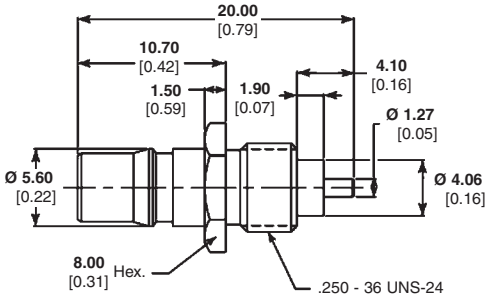

Adapters — In Series

QMA Plug to QMA Jack



Part Number
1408342-1

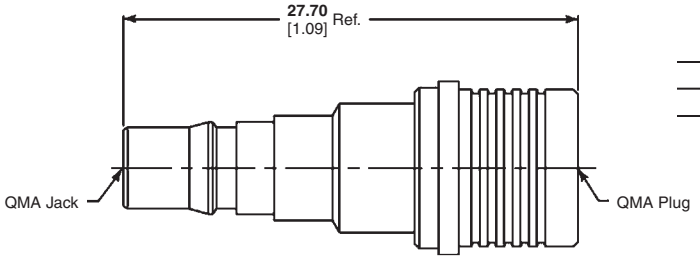

Adapters — Between Series

QMA Plug to SMA Plug



Part Number
1408393-1

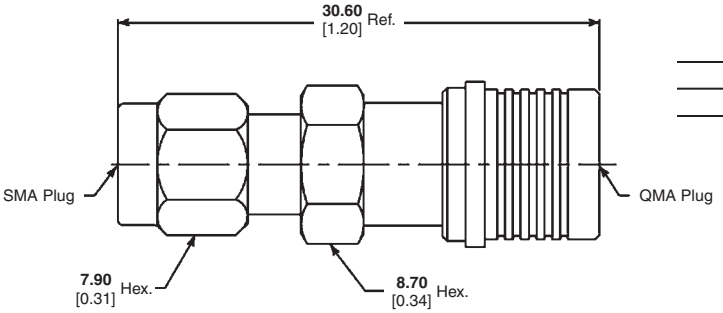

QMA Jack to SMA Plug



Part Number
1408343-1

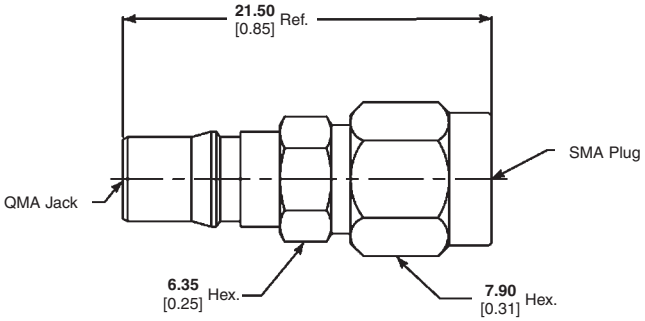

Note: Part Numbers are RoHS compliant except: ♦ Indicates non-RoHS compliant.

Catalog 1307191
Revised 3-07

www.tycoelectronics.com

Dimensions are in millimeters and inches unless otherwise specified. Values in brackets are standard equivalents.

Dimensions are shown for reference purposes only. Specifications subject to change.

USA: 1-800-522-6752
Canada: 1-905-470-4425
Mexico: 01-800-733-8926
C. America: 52-55-1106-0803

South America: 55-11-2103-6000
Hong Kong: 852-2735-1628
Japan: 81-44-844-8013
UK: 44-8706-080-208

Series 1.0/2.3 (50 Ohm/75 Ohm)



Miniature coaxial connectors series 1.0/2.3 (CECC 22230 and IEC 61169-29) coaxial connectors are devised to meet the requirements of compact electronic instrumentation. All plugs and jacks with Z_O = 50 Ω are designed for a number of different 50 Ω and 75 Ω cables. Owing to the large demand, the Series 1.0/2.3 has also been optimized as a 75 Ω design into the GHz range. The different types of coupling mechanisms, such as screw on, slide-in and latching coupling permit space-saving installation.

In addition, an extensive range of measurement accessories, adapters as well as terminations is available. The quality-determining factors have been established on the basis of corresponding measurements and test procedures in accordance with national and international standards for RF connectors (IEC 61169-1, MIL-C-39012 etc.).

High-quality materials ensure high reliability even in industrial atmospheres. The contact principle is the pin-socket principle and the contacts are gold plated to ensure perfect contact mating. The inner conductor parts are held in PTFE (Polytetrafluoroethylene).

The reduced dimensions of all component parts of these connectors permit a compact hole spacing (installation pitch) of 6.8 [0.27] depending upon the corresponding cable diameters.

The cable is connected by crimping the cable braid to the plug or jack body, the inner conductor is soldered or crimped.

In most applications, the plug and jack belong to the same coupling type group. In special instances, such as for measurement purposes, different coupling types can be used together.

Between Series Adapters
For Series 1.0/2.3 Adapters please see pages 251-260.

Catalog 1307191
Revised 3-07

www.tycoelectronics.com

Dimensions are in millimeters and inches unless otherwise specified. Values in brackets are standard equivalents.

Dimensions are shown for reference purposes only. Specifications subject to change.

USA: 1-800-522-6752
Canada: 1-905-470-4425
Mexico: 01-800-733-8926
C. America: 52-55-1106-0803

South America: 55-11-2103-6000
Hong Kong: 852-2735-1628
Japan: 81-44-844-8013
UK: 44-8706-080-208

Series 1.0/2.3 (50 Ohm/75 Ohm) (Continued)

Technical Data

Electrical and mechanical characteristics in accordance with CECC 22230

Characteristic impedance — 50 Ω/75 Ω

Frequency range — up to 10 GHz/ 2 GHz

Reflection factor, referred to 50 Ω cable[1] —
up to 1 GHz, r ≤ 0.05
up to 4 GHz, r ≤ 0.07
up to 10 GHz, r ≤ 0.15

Reflection factor, referred to 75 Ω cable[1] —
up to 2 GHz, r ≤ 0.10

Insulation resistance —
initial value ≥ 1 GΩ
after stressing ≥ 200 MΩ

Screening effectiveness[2] —
≥ 90 dB

Inner conductor contact resistance — after stressing ≤ 10 mΩ

Outer conductor continuity —
after stressing ≤ 7.5 mΩ

Voltage proof[3] —
flexible cables (RG 316)
— at sea level, 750 V, 50 Hz
— at 20 km altitude, 150 V, 50 Hz

Working voltage[3] —
flexible cables (RG 316)
— at sea level, 350 V, 50 Hz
— at 20 km altitude, 65 V, 50 Hz

Service life — 500 cycles

Climatic category — 40/85/21

Notes:
[1] Guide values, depending on cable type and connector style.
[2] Values apply to a straight screw and latching coupling with suitable cable.
[3] Some cables suitable for use with these connectors have lower characteristic values than specified here.
[4] For applicable cable types see page 151.

Coupling Types

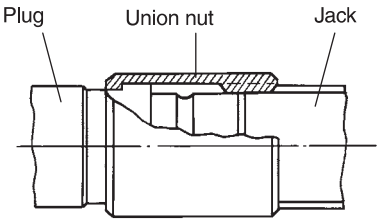

Type A

Screw coupling; version with union nut

This type permits the plug and jack to be screwed together manually by means of a union nut secured to the plug. This is necessary for readily accessible locations, front panel test points and cable connections.

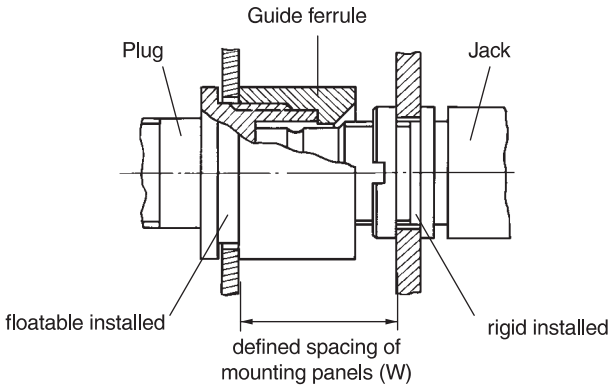

Type C

Slide-in coupling; version with centering ferrule

In this type of coupling, the plug features a guide ferrule with a conical entry surface. This ensures that the floatable bulkhead plugs with cable connection make a reliable electrical connection to the rigid installed jack. Examples of this are single and multi-contact connections of slide-in applications. “W” denotes the allowed spacing of the mounting panel for satisfactory contact when the connection is made.

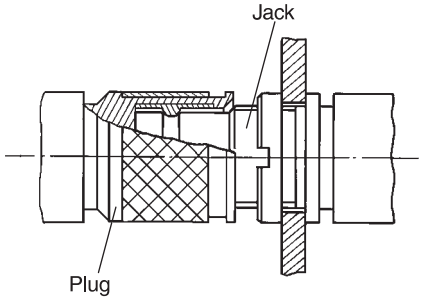

Type F

Latching coupling (Quick Lock)

In this version, the cable plugs bear a funnel ferrule with built-in spring which snaps into a groove on the jack, simultaneously locking the connection. The connection can be easily separated by lightly pulling the outer sleeve of the plug. This type of coupling can be used with a higher packing density, as the screw coupling.

Catalog 1307191
Revised 3-07

www.tycoelectronics.com

Dimensions are in millimeters and inches unless otherwise specified. Values in brackets are standard equivalents.

Dimensions are shown for reference purposes only. Specifications subject to change.

USA: 1-800-522-6752
Canada: 1-905-470-4425
Mexico: 01-800-733-8926
C. America: 52-55-1106-0803

South America: 55-11-2103-6000
Hong Kong: 852-2735-1628
Japan: 81-44-844-8013
UK: 44-8706-080-208

Series 1.0/2.3, 50 Ohm

Plugs, Solder/Crimp

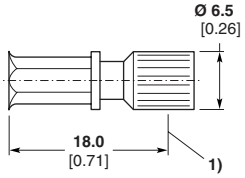

1) Detent for jack

Cable	Coupling Type	Ø Max.	Part No.
RG 316	A	**2.67** 0.105	**1393670-1**

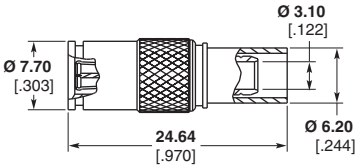

Cable	Coupling Type	Ø Max.	Part No.
WP93385L2	F	**2.67** 0.105	**619223-1**

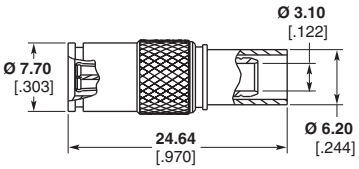

Cable	Coupling Type	Ø Max.	Part No.
LMR 240	F	**2.67** 0.105	**619224-1**

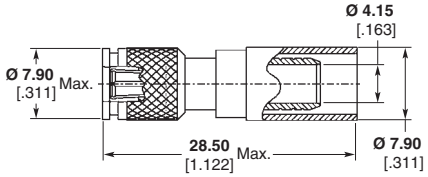

Cable	Coupling Type	Ø Max.	Part No.
LMR 240FR	F	**6.3** 0.248	**1460010-1**

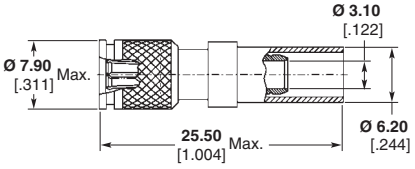

Cable	Coupling Type	Ø Max.	Part No.
WP93385L2	F	**6.3** 0.248	**619085-1**

Note: Part Numbers are RoHS compliant except: ♦ Indicates non-RoHS compliant.

Catalog 1307191
Revised 3-07

www.tycoelectronics.com

Dimensions are in millimeters and inches unless otherwise specified. Values in brackets are standard equivalents.

Dimensions are shown for reference purposes only. Specifications subject to change.

USA: 1-800-522-6752
Canada: 1-905-470-4425
Mexico: 01-800-733-8926
C. America: 52-55-1106-0803

South America: 55-11-2103-6000
Hong Kong: 852-2735-1628
Japan: 81-44-844-8013
UK: 44-8706-080-208

Series 1.0/2.3, 50 Ohm (Continued)

Bulkhead Jack, Solder/Crimp

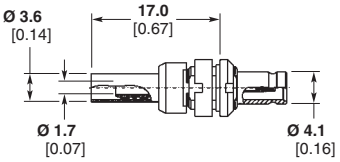

Cable	Coupling Type	Ø Max.	Part No.
RG 316	A, C, F	2.6 0.10	4-1393670-4

Bulkhead Solder Jack

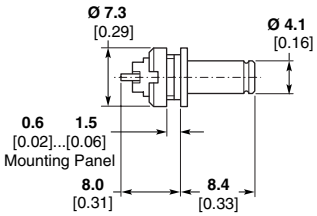

Coupling Type	Part No.
C, F	1393670-8

Vertical PC Board Mount Jack

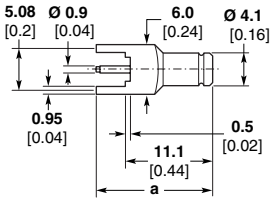

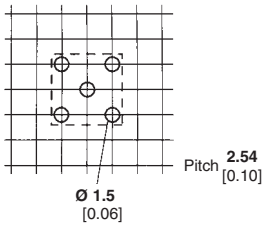

Recommended Mounting Holes

Coupling Type	Dim a	Part No.
C, F	14.6 0.57	3-1393670-4
C, F	15.6 0.61	3-1393670-5

Vertical PC Board Mount Bulkhead Jack

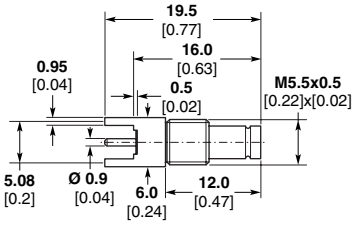

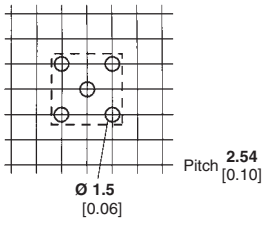

Recommended Mounting Holes

Coupling Type	Part No.
A, C, F	3-1393670-6

Note: Part Numbers are RoHS compliant except: ♦ Indicates non-RoHS compliant.

Catalog 1307191
Revised 3-07

www.tycoelectronics.com

Dimensions are in millimeters and inches unless otherwise specified. Values in brackets are standard equivalents.

Dimensions are shown for reference purposes only. Specifications subject to change.

USA: 1-800-522-6752
Canada: 1-905-470-4425
Mexico: 01-800-733-8926
C. America: 52-55-1106-0803

South America: 55-11-2103-6000
Hong Kong: 852-2735-1628
Japan: 81-44-844-8013
UK: 44-8706-080-208

Series 1.0/2.3, 50 Ohm (Continued)

Right-Angle PC Board Mount Bulkhead Jack

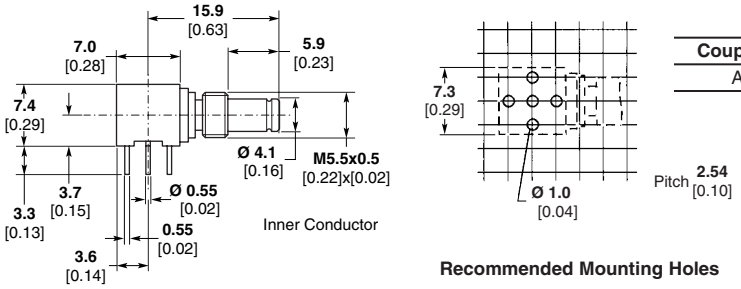

Coupling Type	Part No.
A, C, F	3-1393670-9

Vertical PC Board Mount ACTION PIN Jack

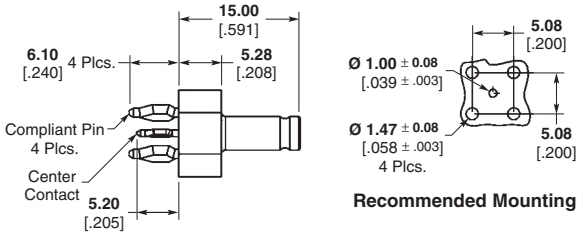

Coupling Type	Part No.
C, F	6274431-1

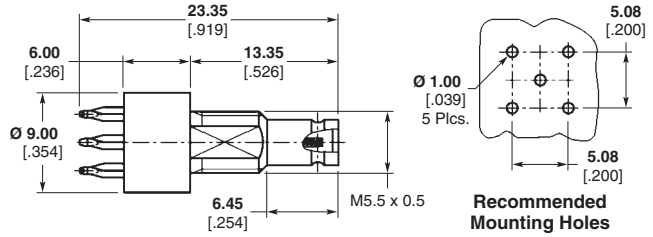

Coupling Type	Part No.
A, C, F	619107-1

Panel Mount, Press-in, Launcher Jack

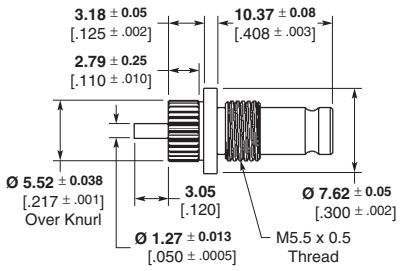

Coupling Type	Part No.
A, C, F	1274449-1

Panel Mount, 4-Hole Flange, Launcher Jack

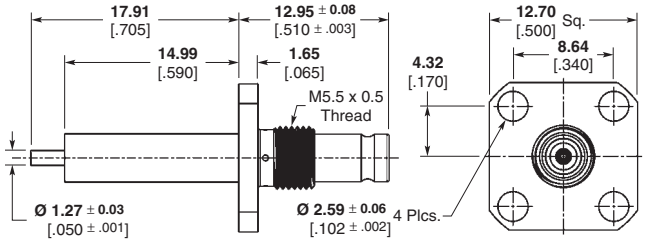

Coupling Type	Part No.
A, C, F	1274520-1

Front Mount, Bulkhead Jack

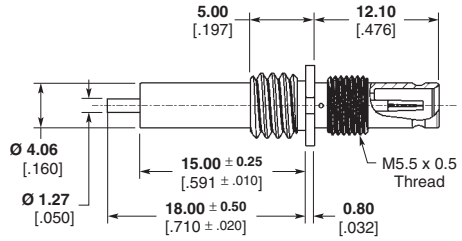

Coupling Type	Part No.
A, C, F	1274594-1

Note: Part Numbers are RoHS compliant except: ♦ Indicates non-RoHS compliant.

Catalog 1307191
Revised 3-07

www.tycoelectronics.com

Dimensions are in millimeters and inches unless otherwise specified. Values in brackets are standard equivalents.

Dimensions are shown for reference purposes only. Specifications subject to change.

USA: 1-800-522-6752
Canada: 1-905-470-4425
Mexico: 01-800-733-8926
C. America: 52-55-1106-0803

South America: 55-11-2103-6000
Hong Kong: 852-2735-1628
Japan: 81-44-844-8013
UK: 44-8706-080-208

Series 1.0/2.3, 50 Ohm (Continued)

Right-Angle PC Board Mount Bulkhead Jack

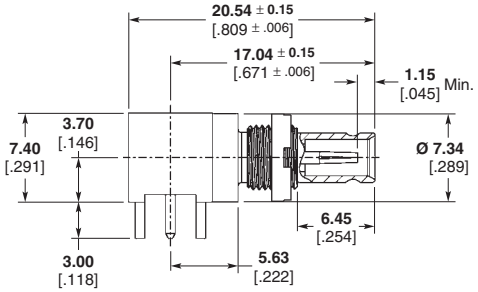

Part Number 1274544-1

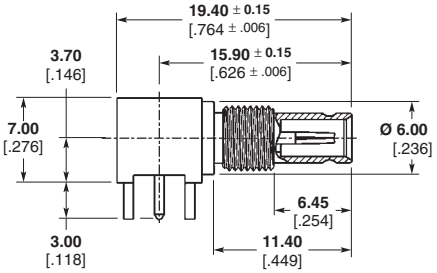

Part Number 1460060-1

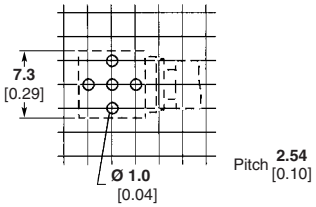

Recommended Mounting Holes

Coupling Type	Part No.
A, C, F	**1274544-1**
A, C, F	**1460060-1**

Plating

Outer Body — Silver

Outer and Center Conductor — Gold

Coupling Type	Part No.
A, C, F	**1460139-1**

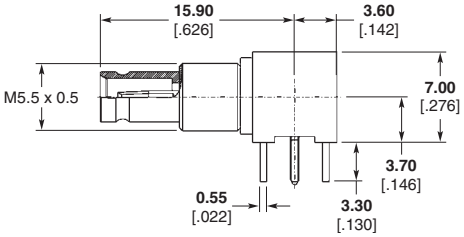

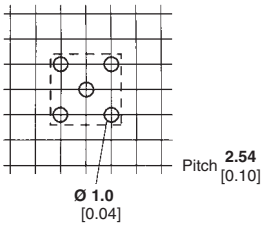

Recommended Mounting Holes

Series 1.0/2.3, 75 Ohm

Plugs, Solder/Crimp

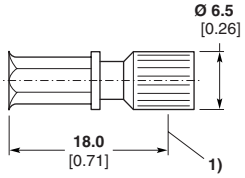

1) Detent for jack

Cable	Coupling Type	Ø Max.	Part No.
RG 179	A	**2.67** 0.105	**5-1393670-5**

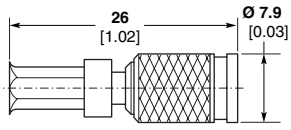

Cable	Coupling Type	Ø Max.	Part No.
RG 179	F	**2.67** 0.105	**6-1393670-2**
ST 212	F	**3.2** 0.13	**6-1393670-5**
02Y(St)CY 0.45/2.0	F	**3.6** 0.14	**6-1393670-4**

Note: Part Numbers are RoHS compliant except: ♦ Indicates non-RoHS compliant.

Catalog 1307191
Revised 3-07

www.tycoelectronics.com

Dimensions are in millimeters and inches unless otherwise specified. Values in brackets are standard equivalents.

Dimensions are shown for reference purposes only. Specifications subject to change.

USA: 1-800-522-6752
Canada: 1-905-470-4425
Mexico: 01-800-733-8926
C. America: 52-55-1106-0803

South America: 55-11-2103-6000
Hong Kong: 852-2735-1628
Japan: 81-44-844-8013
UK: 44-8706-080-208

Series 1.0/2.3, 75 Ohm (Continued)

Straight Plugs, Solder/Crimp

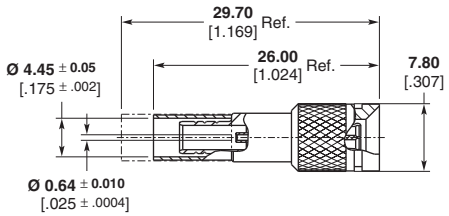

Cable	Coupling Type	Ø Max.	Part No.
BELDEN 1855A	A, C, F	**2.67** 0.105	**619226-1**

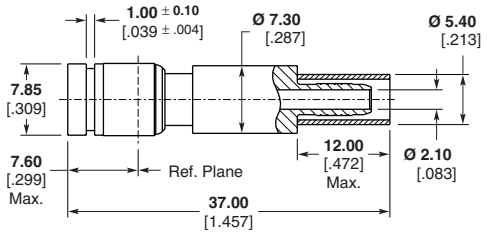

Cable	Coupling Type	Ø Max.	Part No.
BT 3002	A, C, F	**2.67** 0.105	**1460815-1**

Right-Angle Plug, Solder/Crimp

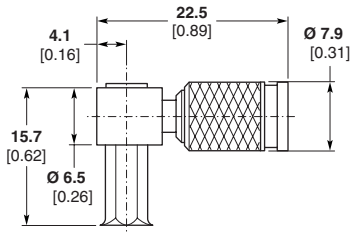

Cable	Coupling Type	Ø Max.	Part No.
RG 179	F	**2.67** 0.105	**2-1393670-6**
02Y(St)CY 0.45/2.0	F	**3.6** 0.14	**7-1393670-0**

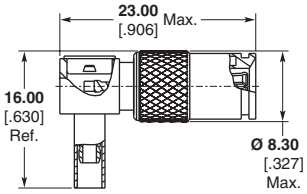

Cable	Coupling Type	Ø Max.	Part No.
RG 316	F	**2.8** 0.110	**619228-1**

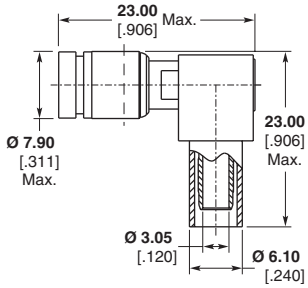

Cable	Coupling Type	Ø Max.	Part No.
RA 7000	A, C, F	**2.67** 0.105	**1460817-1**

Bulkhead Jack, Solder/Crimp

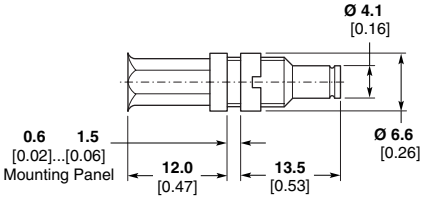

Cable	Coupling Type	Ø Max.	Part No.
RG 179	A, C, F	**2.67** 0.105	**8-1393670-0**

BELDEN is a trademark of Belden Wire and Cable Company.

Note: Part Numbers are RoHS compliant except: ♦ Indicates non-RoHS compliant.

Catalog 1307191
Revised 3-07

www.tycoelectronics.com

Dimensions are in millimeters and inches unless otherwise specified. Values in brackets are standard equivalents.

Dimensions are shown for reference purposes only. Specifications subject to change.

USA: 1-800-522-6752
Canada: 1-905-470-4425
Mexico: 01-800-733-8926
C. America: 52-55-1106-0803

South America: 55-11-2103-6000
Hong Kong: 852-2735-1628
Japan: 81-44-844-8013
UK: 44-8706-080-208

Series 1.0/2.3, 75 Ohm (Continued)

Right-Angle Bulkhead Jack, Solder/Crimp

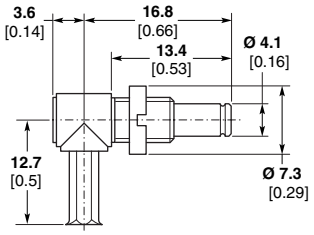

Cable	Coupling Type	Ø Max.	Part No.
RG 179, 316	A, C, F	2.67 0.105	3-1393670-2

Vertical PC Board Mount Bulkhead Jack

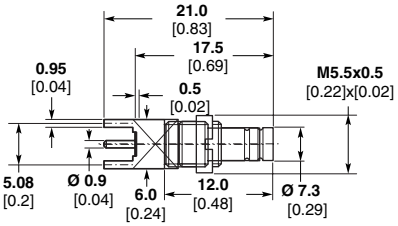

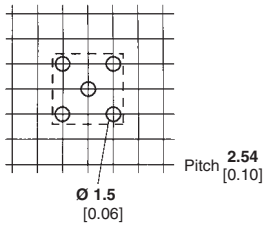

Recommended Mounting Holes

Coupling Type	Part No.
A, C, F	8-1393670-3

PC Board Mount Bulkhead Jack

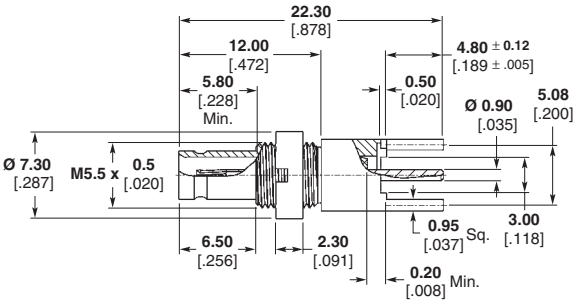

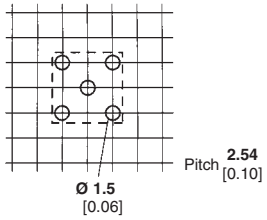

Recommended Mounting Holes

Coupling Type	Ø Max.	Part No.
A, C, F	1.00-2.30 .039-.091	619220-1

Vertical PC Board Mount Bulkhead Jack

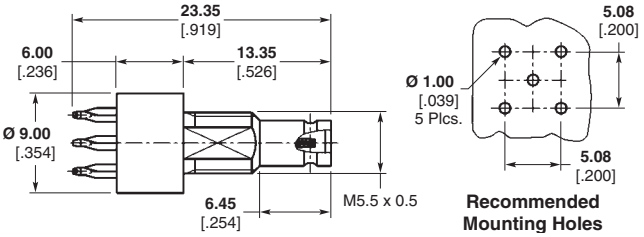

Recommended Mounting Holes

Coupling Type	Part No.
A, C, F	619106-1

Note: Part Numbers are RoHS compliant except: ♦ Indicates non-RoHS compliant.

Catalog 1307191
Revised 3-07

www.tycoelectronics.com

Dimensions are in millimeters and inches unless otherwise specified. Values in brackets are standard equivalents.

Dimensions are shown for reference purposes only. Specifications subject to change.

USA: 1-800-522-6752
Canada: 1-905-470-4425
Mexico: 01-800-733-8926
C. America: 52-55-1106-0803
South America: 55-11-2103-6000
Hong Kong: 852-2735-1628
Japan: 81-44-844-8013
UK: 44-8706-080-208

Series 1.0/2.3, 75 Ohm (Continued)

Straight PCB Jacks, Multi-Port

No. of Ports	Coupling Type	Part No.
2	A, C, F	**1274714-3**
3	A, C, F	**1274714-2**
4	A, C, F	**1274714-1**

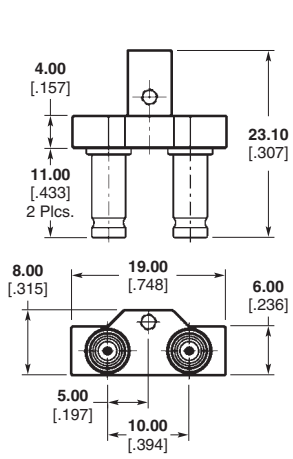

Part Number 1274714-3

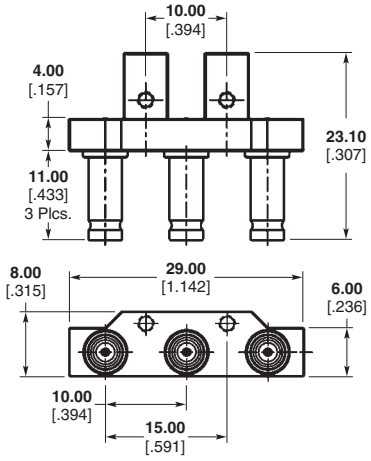

Part Number 1274714-2

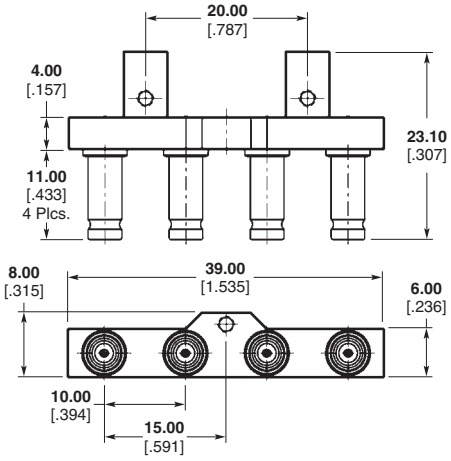

Part Number 1274714-1

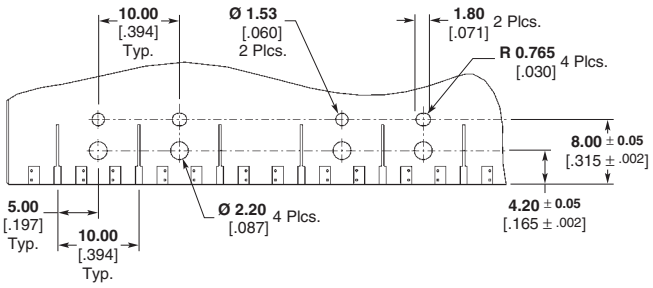

Recommended PC Board Layout
2 Positions Shown

Accessories for 50 Ohm and 75 Ohm

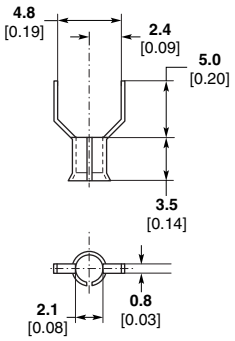

Soldering aid (sleeve) for jack 1393670-8 with solder connection.

Part No.
2-1393562-2

For cable size similar to RG 179 and RG 316

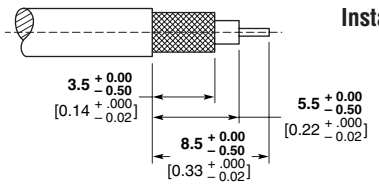

Installation example:

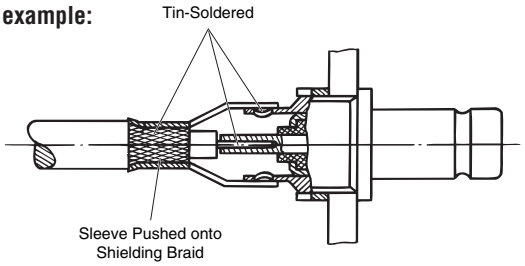

Note: For more accessories, see page 147.

Note: Part Numbers are RoHS compliant except: ♦ Indicates non-RoHS compliant.

Catalog 1307191
Revised 3-07

www.tycoelectronics.com

Dimensions are in millimeters and inches unless otherwise specified. Values in brackets are standard equivalents.

Dimensions are shown for reference purposes only. Specifications subject to change.

USA: 1-800-522-6752
Canada: 1-905-470-4425
Mexico: 01-800-733-8926
C. America: 52-55-1106-0803

South America: 55-11-2103-6000
Hong Kong: 852-2735-1628
Japan: 81-44-844-8013
UK: 44-8706-080-208

Series 1.6/5.6 mS (75 Ohm)



General

The Series 1.6/5.6 mS connectors have been modified to incorporate improved technical advantages. Transmission values have been greatly improved while maintaining the proven positive characteristics of the previous generations. All types of this new "third generation" Series 1.6/5.6 mS connectors are connection-compatible with their predecessor.

Today's PCM technology demands place the Series 1.6/5.6 mS connectors as a most suitable component for transmission of high bit rates.

Connectors are available in straight and angled versions as well as with different mechanisms for screw (type A), snap-on (type B), slide-in (type C), and latching (type F) coupling. All connectors of different coupling mechanisms are compatible with each other.

Plug

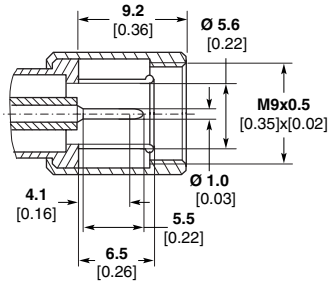

Jack

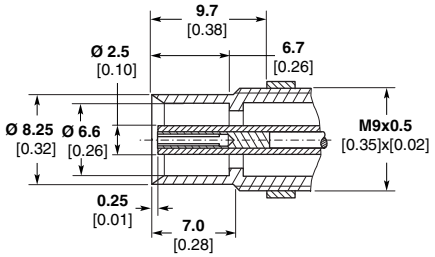

Between Series Adapters

For Series 1.6/5.6 Adapters please see pages 253-262.

The connectors are designed according to the pin-socket principle. The contacts are partially gold-plated, ensuring long service life and stable contact resistance for a high number of intermateability cycles.

The inner conductor parts are secured so that they cannot be displaced. The insulating parts are made of PEEK (polyetheretherketone) or PC (polycarbonate).

The cable inner conductors are soldered on, while the outer conductors are screwed or crimped on. Also, cable clamp which is independent of the braid clamping secures the connection point against tensile stressing for both methods of connection.

In addition, assembly-friendly connectors with full crimp and IDC (Insulation Displacement Contact) connection are included within the scope of delivery. The connectors are characterized by high mechanical strength and low space requirement.

Connection possibilities exist for a number of different cables, including highly-flexible cable types (with foam insulation) with low attenuation or small diameter. Terminations and adapters (see also measurement accessories) round out the spectrum.

Catalog 1307191
Revised 3-07

www.tycoelectronics.com

Dimensions are in millimeters and inches unless otherwise specified. Values in brackets are standard equivalents.

Dimensions are shown for reference purposes only. Specifications subject to change.

USA: 1-800-522-6752
Canada: 1-905-470-4425
Mexico: 01-800-733-8926
C. America: 52-55-1106-0803

South America: 55-11-2103-6000
Hong Kong: 852-2735-1628
Japan: 81-44-844-8013
UK: 44-8706-080-208

Series 1.6/5.6 mS (75 Ohm) (Continued)

Technical data

Electrical and mechanical characteristics in accordance with CECC 22240

Characteristic impedance — 75 Ω

Frequency range — up to 8 GHz

Reflection factor[1], referred to — flexible cables, straight types —
up to 1 GHz, r ≤ 0.02
up to 4 GHz, r ≤ 0.06
up to 8 GHz, r ≤ 0.10
flexible cables, angled types —
up to 1 GHz, r ≤ 0.04
up to 2 GHz, r ≤ 0.06
up to 4 GHz, r ≤ 0.10

Insulation resistance — initial value, ≥ 10 GΩ
after stressing, ≥ 1 GΩ

Screening effectiveness — (straight screw connector at 1 GHz) ≥ 100 dB

Inner conductor contact resistance — after stressing ≤ 8 mΩ

Outer conductor continuity — after stressing ≤ 4 mΩ

Voltage proof[2] — flexible cables (RG 59) —
at sea level, 1.5 kV, 50 Hz
at 20 km altitude, 300 V, 50 Hz

Working voltage[2] — flexible cables (RG 59) —
at sea level, 500 V, 50 Hz
at 20 km altitude, 125 V, 50 Hz

Service life — 500 cycles

Climatic category — 40/85/21

Notes:
1 Guideline values, depending on cable type and connector style.
2 Some cable types suitable for use with these connectors have lower characteristic values than specified here.
3 For applicable cable types see page 151.

Coupling Types

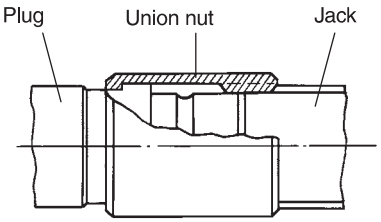

Type A

Screw coupling; version with union nut

This type permits the plug and jack to be screwed together manually by means of a union nut secured to the plug manually, thus preventing the coupling from being pulled apart. This is necessary for readily accessible locations, front panel test points and cable connections.

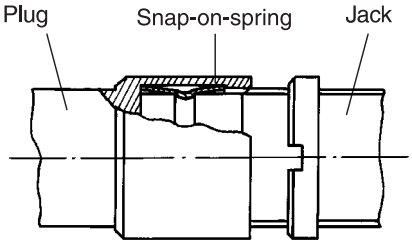

Type B

Snap-on coupling (push-pull)

Connectors of this type offer fast make/break. They can be used for test and maintenance applications and also if there is lack of space and connectors with screw coupling cannot be used.

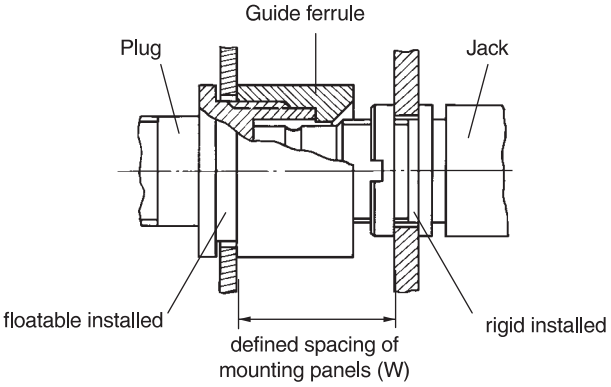

Type C

Slide-in coupling; version with centering ferrule

In this type of coupling, the plug features a guide ferrule with a conical entry surface. This ensures that the floatable bulkhead plugs with cable connection make a reliable electrical connection to the rigid installed jack. Examples of this are single and multi-contact connections of slide-in applications. “W” denotes the allowed spacing of the mounting panel for satisfactory contact when the connection is made.

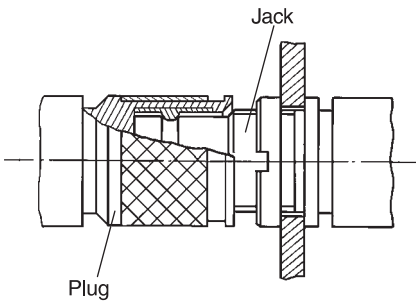

Type F

Latching coupling (Quick Lock)

In this version, the cable plugs bear a funnel ferrule with built-in spring which snaps into a groove on the jack, simultaneously locking the connection. The connection can be easily separated by lightly pulling the outer sleeve of the plug. This type of coupling provides the same amount of axial tensile strength as the screw coupling, but can be used with a higher packing density.

Catalog 1307191
Revised 3-07

www.tycoelectronics.com

Dimensions are in millimeters and inches unless otherwise specified. Values in brackets are standard equivalents.

Dimensions are shown for reference purposes only. Specifications subject to change.

USA: 1-800-522-6752
Canada: 1-905-470-4425
Mexico: 01-800-733-8926
C. America: 52-55-1106-0803

South America: 55-11-2103-6000
Hong Kong: 852-2735-1628
Japan: 81-44-844-8013
UK: 44-8706-080-208

Series 1.6/5.6 mS (75 Ohm) (Continued)

Plugs, Solder/Clamp

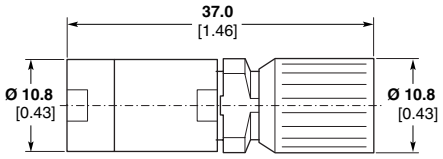

Cable	Coupling Type	Ø Max.	Part No.
2YCCY 0.7/4.4	A	**7.8** 0.31	**1393682-1**

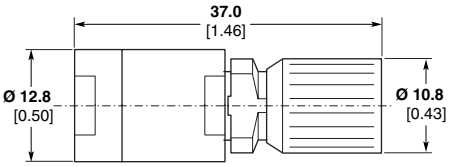

Cable	Coupling Type	Ø Max.	Part No.
2YCCY 1.0/6.5 2YC(mS)CY 1.0/6.5	A	**9.8** 0.31	**1393682-2**

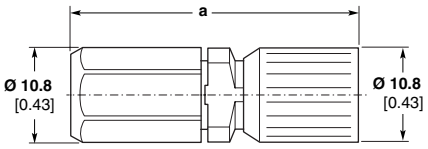

Cable	Coupling Type	Dim. a	Ø Max.	Part No.
2YCY 0.4/2.5	A	**30.7** 1.21	**4.1** 0.16	**1-1393682-1**
2YCCY 0.4/2.5	A	**30.7** 1.21	**4.8** 0.19	**1-1393682-2**
2YC(mS)CY 0.4/2.5	A	**30.7** 1.21	**5.0** 0.20	
2YCY 0.7/4.4	A	**32.9** 1.30	**6.1** 0.24	**1-1393682-3**
RG 59	A	**32.9** 1.30	**6.25** 0.25	
2YC(mS)CY 0.5/3.0	A	**32.9** 1.30	**6.2** 0.24	

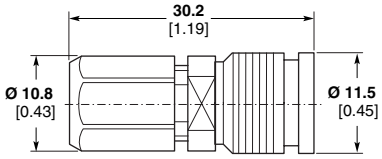

Cable	Coupling Type	Ø Max.	Part No.
02Y(St)CY 0.45/2.0	F	**3.6** 0.14	**1393681-8**

Plugs, Solder/Crimp

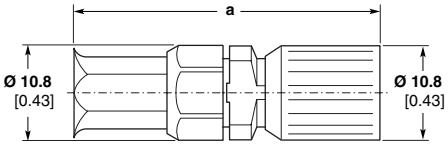

Cable	Coupling Type	Dim. a	Ø Max.	Part No.
RG 179	A	**32.5** 1.28	**2.6** 0.105	**1393680-2**
2YCCY 0.4/2.5	A	**32.5** 1.28	**4.8** 0.19	**1393680-3**
2YC(mS)CY 0.4/2.5	A	**35.5** 1.40	**5.0** 0.20	
2YC(mS)CY 0.5/3.0	A	**35.5** 1.40	**6.2** 0.24	**1393680-4**
2YCY 0.7/4.4	A	**35.5** 1.40	**6.1** 0.24	**1393680-5**
02Y(St)CY 0.45/2.0	A	**32.5** 1.28	**3.6** 0.14	**1393680-9**

Note: Part Numbers are RoHS compliant except: ♦ Indicates non-RoHS compliant.

Catalog 1307191
Revised 3-07

www.tycoelectronics.com

Dimensions are in millimeters and inches unless otherwise specified. Values in brackets are standard equivalents.

Dimensions are shown for reference purposes only. Specifications subject to change.

USA: 1-800-522-6752
Canada: 1-905-470-4425
Mexico: 01-800-733-8926
C. America: 52-55-1106-0803

South America: 55-11-2103-6000
Hong Kong: 852-2735-1628
Japan: 81-44-844-8013
UK: 44-8706-080-208

Series 1.6/5.6 mS (75 Ohm)

Plugs, Solder/Crimp
(Continued)

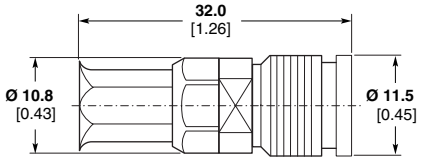

Version with Preassembled Insulation

Cable	Coupling Type	Ø Max.	Part No.
02Y(St)CY 0.45/2.0	F	**3.6** 0.14	**1393672-3**

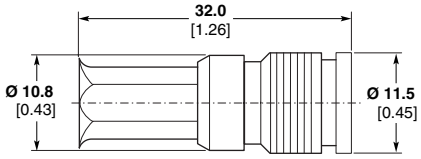

Preassembled Isolation Parts

Cable	Coupling Type	Ø Max.	Part No.
02Y(St)CY 0.45/2.0	F	**3.6** 0.14	**1393672-9**

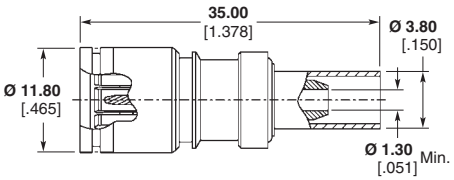

Preassembled Version

Cable	Coupling Type	Ø Max.	Part No.
02YS(St)CHH 0.25/1.2	F	**2.9** 0.11	**1460132-1**

Right-Angle Plugs, Solder/Crimp

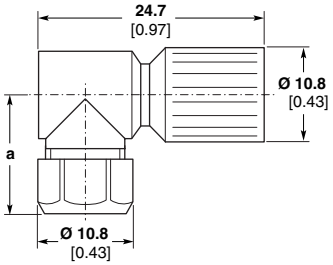

Cable	Coupling Type	Dim. a	Ø Max.	Part No.
2YCCY 0.4/2.5	A	**13.0** 0.51	**4.8** 0.19	**2-1393682-0**
2YC(mS)CY 0.4/2.5	A	**13.0** 0.51	**5.0** 0.20	
2YCY 0.7/4.4	A	**15.8** 0.62	**6.1** 0.24	**2-1393682-2**
RG 59	A	**15.8** 0.62	**6.25** 0.25	
2YC(mS)CY 0.5/3.0	A	**15.8** 0.62	**6.2** 0.24	

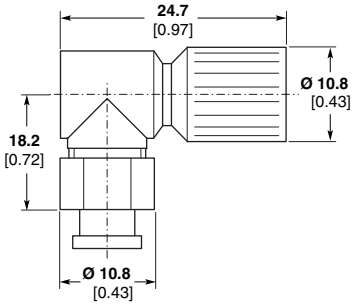

Cable	Coupling Type	Ø Max.	Part No.
RG 179	A	**2.67** 0.105	**2-1393682-3**

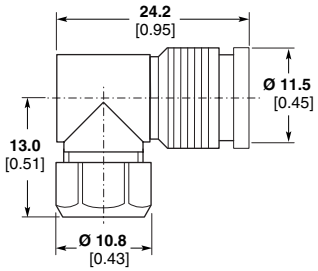

Cable	Coupling Type	Ø Max.	Part No.
02Y(St)CY 0.45/2.0	F	**3.6** 0.14	**1-1393681-0**

Note: Part Numbers are RoHS compliant except: ♦ Indicates non-RoHS compliant.

Catalog 1307191
Revised 3-07

www.tycoelectronics.com

Dimensions are in millimeters and inches unless otherwise specified. Values in brackets are standard equivalents.

Dimensions are shown for reference purposes only. Specifications subject to change.

USA: 1-800-522-6752
Canada: 1-905-470-4425
Mexico: 01-800-733-8926
C. America: 52-55-1106-0803

South America: 55-11-2103-6000
Hong Kong: 852-2735-1628
Japan: 81-44-844-8013
UK: 44-8706-080-208

Series 1.6/5.6 mS (75 Ohm) (Continued)

Right-Angle Plugs, Solder/Crimp

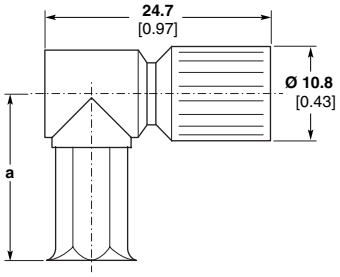

Cable	Coupling Type	Dim. a	Ø Max.	Part No.
02Y12YC(mS)C6Y 0.45/2.0	A	**15.0** 0.59	**4.0** 0.16	**1-1393680-6**
02Y(St)CY 0.45/2.0	A	**15.0** 0.59	**3.6** 0.14	**1-1393680-8**

Right-Angle Plugs, IDC Connection

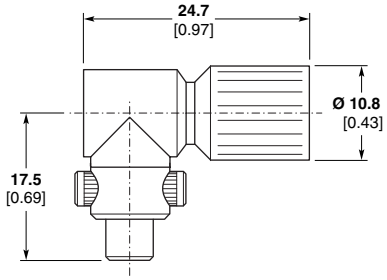

Cable	Coupling Type	Ø Max.	Part No.
02Y(St)CY 0.45/2.0	A	**3.6** 0.14	**1393757-9**
2YCY 0.4/2.5	A	**4.1** 0.16	**1393757-8**

Right-Angle Plug, Solder/Crimp

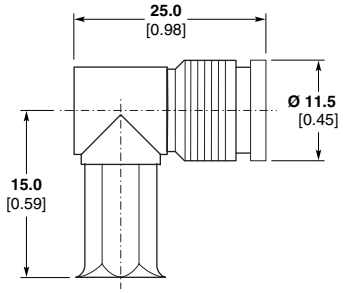

Cable	Coupling Type	Ø Max.	Part No.
02Y(St)CY 0.45/2.0	F	**3.6** 0.14	**1393672-5**

Bulkhead Jacks, Solder/Clamp

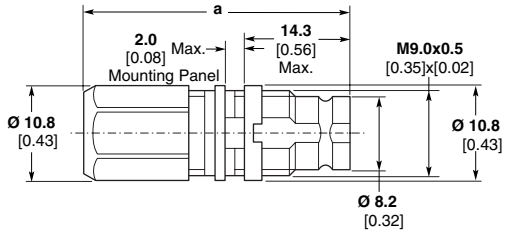

Cable	Coupling Type	Dim. a	Ø Max.	Part No.
2YCY 0.4/2.5	A, B, F	**28.1** 1.11	**4.1** 0.16	**3-1393682-2**
2YCCY 0.4/2.5	A, B, F	**28.1** 1.11	**4.8** 0.19	**3-1393682-3**
2YC(mS)CY 0.4/2.5	A, B, F	**28.1** 1.11	**5.0** 0.20	
2YCY 0.7/4.4	A, B, F	**30.4** 1.20	**6.1** 0.24	**3-1393682-5**
RG 59	A, B, F	**30.4** 1.20	**6.25** 0.25	
2YC(mS)CY 0.5/3.0	A, B, F	**30.4** 1.20	**6.2** 0.24	

Note: Part Numbers are RoHS compliant except: ♦ Indicates non-RoHS compliant.

Catalog 1307191
Revised 3-07

www.tycoelectronics.com

Dimensions are in millimeters and inches unless otherwise specified. Values in brackets are standard equivalents.

Dimensions are shown for reference purposes only. Specifications subject to change.

USA: 1-800-522-6752
Canada: 1-905-470-4425
Mexico: 01-800-733-8926
C. America: 52-55-1106-0803

South America: 55-11-2103-6000
Hong Kong: 852-2735-1628
Japan: 81-44-844-8013
UK: 44-8706-080-208

Series 1.6/5.6 mS (75 Ohm) (Continued)

Bulkhead Jacks, Solder/Clamp (Continued)

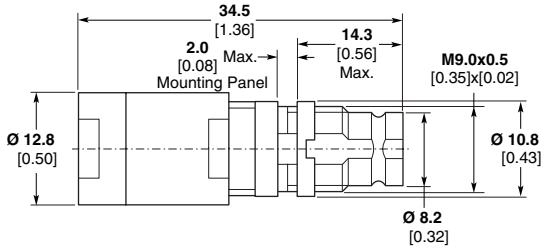

Cable	Coupling Type	Ø Max.	Part No.
2YCCY 1.0/6.5	A, B, F	**9.8** 0.38	**1393682-4**
2YC(mS)CY 1.0/6.5	A, B, F	**9.8** 0.38	

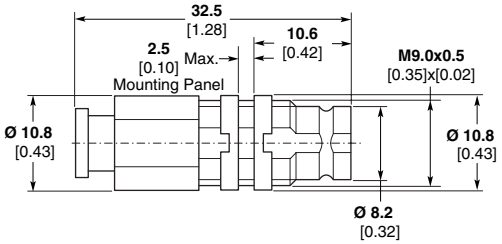

Cable	Coupling Type	Ø Max.	Part No.
RG 179	B, C, F	**2.67** 0.105	**4-1393682-2**

Bulkhead Jacks, Solder

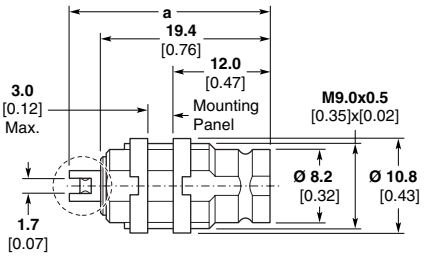

Dim. a	Ø Max.	Part No.
22.3* 0.88	A, B, C, F	**1-1393681-1**
23.5 0.93	A, B, C, F	**1-1393681-9**

*Without soldering tags on outer conductor, dimension **a** up to inner conductor end.

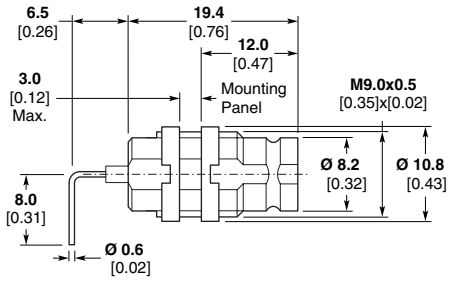

Coupling Type	Part No.
A, B, C, F	**1-1393681-3**

Bulkhead Jacks, Solder/Crimp

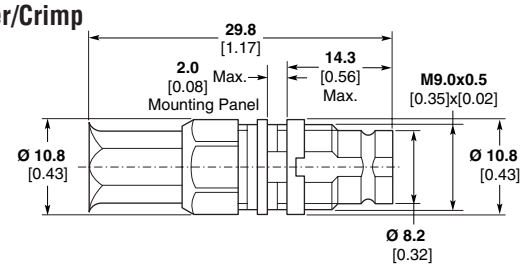

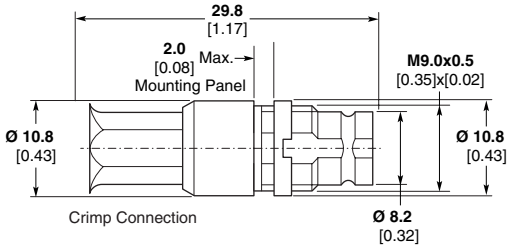

Cable	Coupling Type	Ø Max.	Part No.
RG 179	A, B, F	**2.67** 0.105	**2-1393680-2**
02Y12YC(mS)C6Y 0.45/2.0	A, B, F	**4.0** 0.16	**2-1393680-4**
06YCC(St)6Y 0.4/1.6	A, B, F	**3.3** 0.13	**2-1393680-5**
02Y(St)CY 0.45/2.0	A, B, F	**3.6** 0.14	**1393672-6**

With preassembled insulation parts

Cable	Coupling Type	Ø Max.	Part No.
02Y(St)CY 0.45/2.0	A, B, F	**3.6** 0.14	**1-1393672-4**

Note: Part Numbers are RoHS compliant except: ♦ Indicates non-RoHS compliant.

Catalog 1307191
Revised 3-07

www.tycoelectronics.com

Dimensions are in millimeters and inches unless otherwise specified. Values in brackets are standard equivalents.

Dimensions are shown for reference purposes only. Specifications subject to change.

USA: 1-800-522-6752
Canada: 1-905-470-4425
Mexico: 01-800-733-8926
C. America: 52-55-1106-0803

South America: 55-11-2103-6000
Hong Kong: 852-2735-1628
Japan: 81-44-844-8013
UK: 44-8706-080-208

Series 1.6/5.6 mS (75 Ohm) (Continued)

Right-Angle Bulkhead Jack, Solder/Clamp

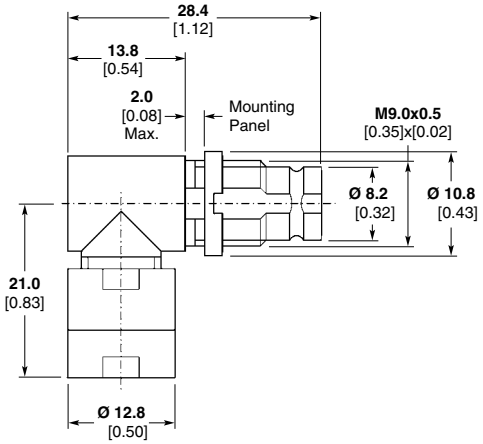

Cable	Coupling Type	Ø Max.	Part No.
2YCCY 1.0/6.5	A, B, F	**9.8** 0.39	**1393682-8**
2YC(mS)CY 1.0/6.5	A, B, F	**9.8** 0.39	

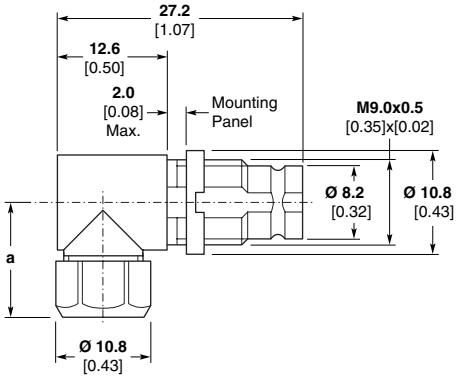

Cable	Coupling Type	Dim. a	Ø Max.	Part No.
02Y(St)CY 0.45/2.0	A, B, F	**13.0** 0.51	**3.6** 0.14	**4-1393682-9**
2YCCY 0.4/2.5	A, B, F	**13.0** 0.51	**4.8** 0.19	**4-1393682-6**
2YC(mS)CY 0.4/2.5	A, B, F	**13.0** 0.51	**5.0** 0.20	
2YCY 0.7/4.4	A, B, F	**15.8** 0.62	**6.1** 0.24	**4-1393682-8**
RG 59	A, B, F	**15.8** 0.62	**6.25** 0.25	
2YC(mS)CY 0.5/3.0	A, B, F	**15.8** 0.62	**6.2** 0.24	

Right-Angle Bulkhead Jack, Solder/Crimp

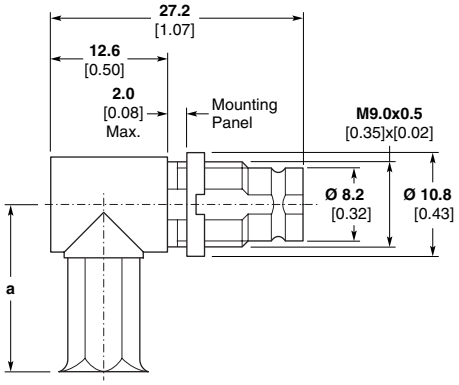

Cable	Coupling Type	Dim. a	Ø Max.	Part No.
RG 179	A, B, F	**15.0** 0.59	**2.67** 0.105	**3-1393680-0**
2YCCY 0.4/2.5	A, B, F	**15.0** 0.59	**4.8** 0.19	**3-1393680-2**
2YC(mS)CY 0.4/2.5	A, B, F	**15.0** 0.59	**5.0** 0.20	
02Y12YC(mS)C6Y 0.45/2.0	A, B, F	**15.0** 0.59	**4.0** 0.16	**3-1393680-5**
06YCC(St)6Y 0.4/1.6	A, B, F	**15.0** 0.59	**3.3** 0.13	**4-1393682-3**
02Y(St)CY 0.45/2.0	A, B, F	**15.0** 0.59	**3.6** 0.14	**3-1393680-7**

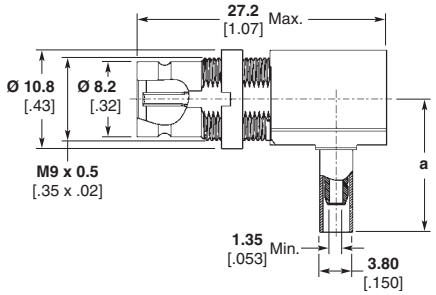

Cable	Coupling Type	Dim. a	Ø Max.	Part No.
02YS(St)CHH 0.25/1.2	A, B, F	**15.0** 0.59	**2.9** 0.11	**1460128-1***
02YS(St)CHH 0.25/1.2	A, B, F	**15.0** 0.59	**2.9** 0.11	**1460169-1****

* Tray Packaging.
** Individual Packaging.

Note: Part Numbers are RoHS compliant except: ♦ Indicates non-RoHS compliant.

Catalog 1307191
Revised 3-07

www.tycoelectronics.com

Dimensions are in millimeters and inches unless otherwise specified. Values in brackets are standard equivalents.

Dimensions are shown for reference purposes only. Specifications subject to change.

USA: 1-800-522-6752
Canada: 1-905-470-4425
Mexico: 01-800-733-8926
C. America: 52-55-1106-0803

South America: 55-11-2103-6000
Hong Kong: 852-2735-1628
Japan: 81-44-844-8013
UK: 44-8706-080-208

Series 1.6/5.6 mS (75 Ohm) (Continued)

Right-Angle Bulkhead Jack, IDC Connection

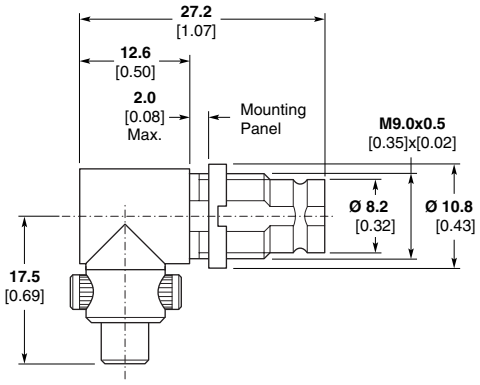

Cable	Coupling Type	Ø Max.	Part No.
02Y(St)CY 0.45/2.0	A, B, F	3.6 0.14	1-1393757-6

Vertical PC Board Mount Jack

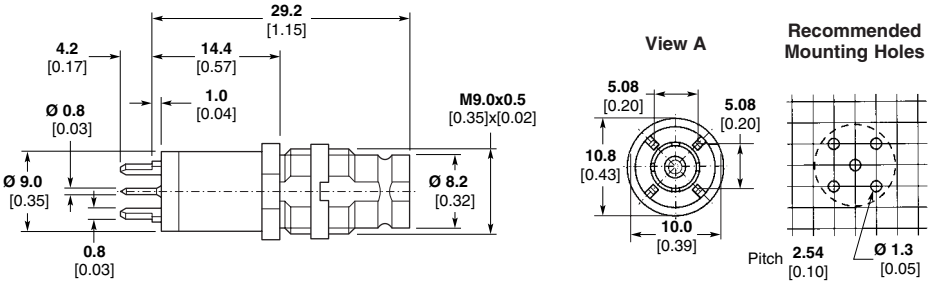

Coupling Type	Part No.
A, B, F	1-1393681-6

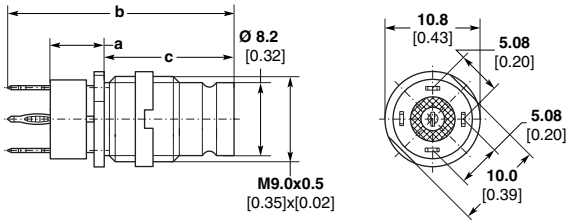

Inner- and outer conductor, press-fit

Coupling Type	Dim. a	Dim. b	Dim. c	Part No.
A, B, F	6.0 0.24	27.2 1.07	16.4 0.65	2-1393757-0

Recommended Mounting Holes

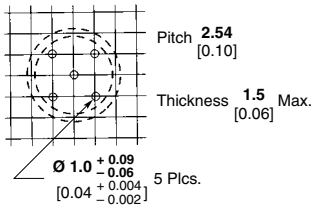

PC Board Mount Bulkhead Jack

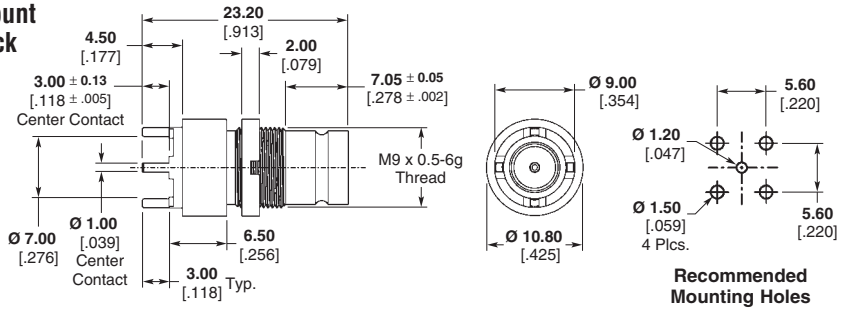

Coupling Type	Part No.
A, B, F	1274513-1

Note: Part Numbers are RoHS compliant except: ♦ Indicates non-RoHS compliant.

Catalog 1307191
Revised 3-07

www.tycoelectronics.com

Dimensions are in millimeters and inches unless otherwise specified. Values in brackets are standard equivalents.

Dimensions are shown for reference purposes only. Specifications subject to change.

USA: 1-800-522-6752
Canada: 1-905-470-4425
Mexico: 01-800-733-8926
C. America: 52-55-1106-0803

South America: 55-11-2103-6000
Hong Kong: 852-2735-1628
Japan: 81-44-844-8013
UK: 44-8706-080-208

Series 1.6/5.6 mS (75 Ohm) (Continued)

Right-Angle PC Board Mount Bulkhead Jack

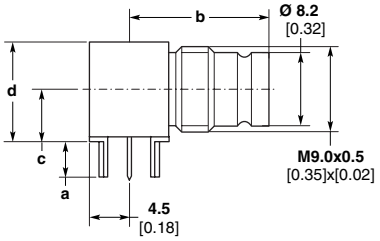

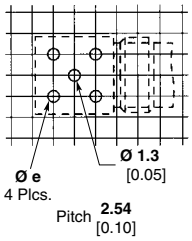

Recommended Mounting Holes

Coupling Type	Dim. a	Dim. b	Dim. c	Dim. d	Dim. e	Part No.
A, B, F	**4.0** 0.16	**16.0** 0.63	**6.0** 0.24	**10.75** 0.42	**1.3** 0.05	**2-1393681-1**
A, B, F	**3.3** 0.13	**16.0** 0.63	**6.0** 0.24	**10.75** 0.42	**1.3** 0.05	**2-1393681-2**
A, B, F	**3.7** 0.15	**22.9** 0.90	**6.45** 0.25	**11.25** 0.44	**1.8** 0.07	**2-1393681-3***

*With positioning and snap-on system onto PC board

U-link Plug/Plug

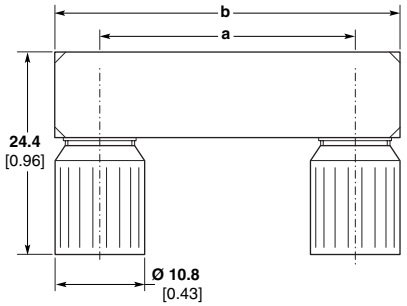

Coupling Type	Dim. a ± 0.1 [0.004]	Dim. b Max.	Part No.
A	**15.0** 0.59	**26.5** 1.04	**6-1460823-1**

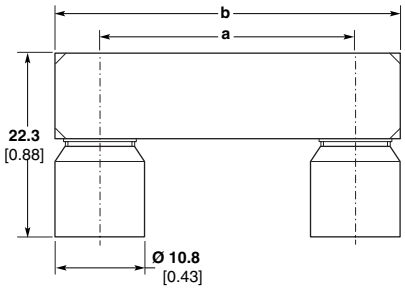

Coupling Type	Dim. a ± 0.1 [0.004]	Dim. b Max.	Part No.
B	**15.0** 0.59	**26.5** 1.04	**6-1460823-2**

Note: Part Numbers are RoHS compliant except: ♦ Indicates non-RoHS compliant.

Catalog 1307191
Revised 3-07

www.tycoelectronics.com

Dimensions are in millimeters and inches unless otherwise specified. Values in brackets are standard equivalents.

Dimensions are shown for reference purposes only. Specifications subject to change.

USA: 1-800-522-6752
Canada: 1-905-470-4425
Mexico: 01-800-733-8926
C. America: 52-55-1106-0803

South America: 55-11-2103-6000
Hong Kong: 852-2735-1628
Japan: 81-44-844-8013
UK: 44-8706-080-208

Series 1.6/5.6 mS (75 Ohm) (Continued)

Accessories

These components are provided when bulkhead jack part numbers are ordered, but can also be ordered separately.

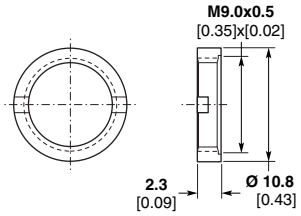

Threaded ring for installation of bulkhead jacks

Part No.
1-1393562-0

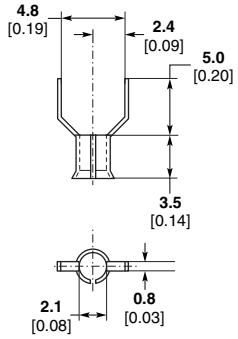

Soldering aid (sleeve) for jack (1-1393681-9) with solder termination

Part No.
2-1393562-2

Cable stripping and installation example: see Part number 2-1393562-2 under “Series 1.0/2.3”, page 137.

Measurement Accessories

Between Series Adapters (75 Ohm)

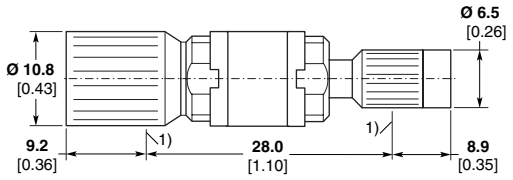

Plug 1.6/5.6 to Plug 1.0/2.3

Coupling Type	Part No.
A	6-1460821-1

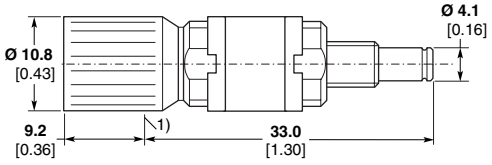

Plug 1.6/5.6 to Jack 1.0/2.3

Coupling Type	Part No.
A, F[2]	2-1393670-2♦
A, F[2]	6-1460821-2

[2] Only jack side

1) Detent for jack

Note: Part Numbers are RoHS compliant except: ♦ Indicates non-RoHS compliant.

Catalog 1307191
Revised 3-07

www.tycoelectronics.com

Dimensions are in millimeters and inches unless otherwise specified. Values in brackets are standard equivalents.

Dimensions are shown for reference purposes only. Specifications subject to change.

USA: 1-800-522-6752
Canada: 1-905-470-4425
Mexico: 01-800-733-8926
C. America: 52-55-1106-0803

South America: 55-11-2103-6000
Hong Kong: 852-2735-1628
Japan: 81-44-844-8013
UK: 44-8706-080-208

Measurement Accessories (Continued)

Between Series Adapters (75 Ohm) (Continued)

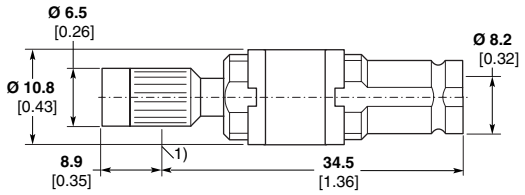

1) Detent for jack

Plug 1.0/2.3 to Jack 1.6/5.6

Coupling Type	Part No.
A, B[2], F[2]	6-1460821-3

[2] Only jack side

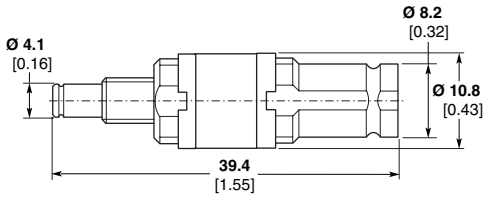

Jack 1.0/2.3 to Jack 1.6/5.6

Coupling Type	Part No.
A, B, F	6-1460821-4

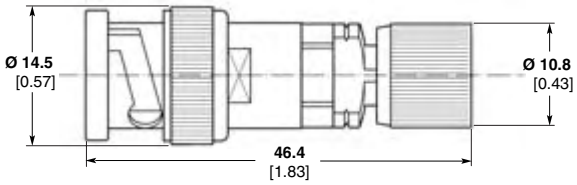

BNC Plug to Plug 1.6/5.6

Part No.
7-1393665-4

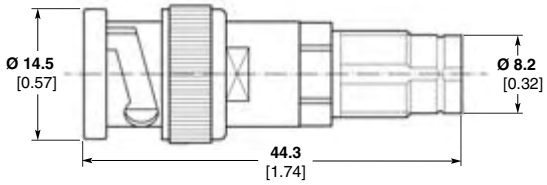

BNC Plug to Jack 1.6/5.6

Part No.
7-1393665-6

Note: Part Numbers are RoHS compliant except: ♦ Indicates non-RoHS compliant.

Catalog 1307191
Revised 3-07

www.tycoelectronics.com

Dimensions are in millimeters and inches unless otherwise specified. Values in brackets are standard equivalents.

Dimensions are shown for reference purposes only. Specifications subject to change.

USA: 1-800-522-6752
Canada: 1-905-470-4425
Mexico: 01-800-733-8926
C. America: 52-55-1106-0803

South America: 55-11-2103-6000
Hong Kong: 852-2735-1628
Japan: 81-44-844-8013
UK: 44-8706-080-208

Measurement Accessories (Continued)

Between Series Adapters (75 Ohm) (Continued)

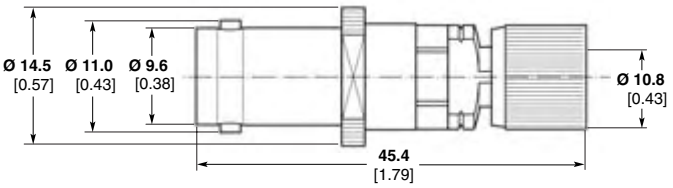

BNC Jack to Plug 1.6/5.6

Part No.
7-1393665-7

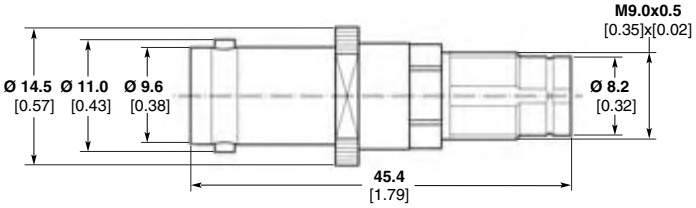

BNC Jack to Jack 1.6/5.6

Part No.
7-1393665-5

Termination (75 Ohm)

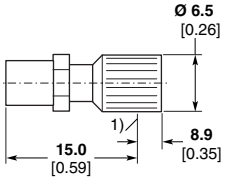

1) Detent for jack

Standard Termination

Plug 1.0/2.3

Coupling Type	Power W	Part No.
A	0.6	7-1393665-2

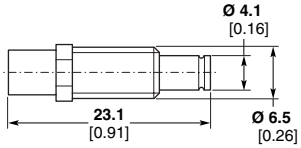

Jack 1.0/2.3

Coupling Type	Power W	Part No.
A, F	0.6	7-1393665-3

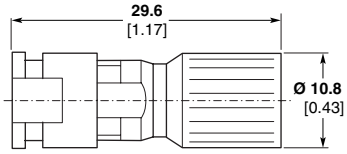

Plug 1.6/5.6

Coupling Type	Power W	Part No.
A	1.0	6-1393665-1

Note: Part Numbers are RoHS compliant except: ♦ Indicates non-RoHS compliant.

Catalog 1307191
Revised 3-07

www.tycoelectronics.com

Dimensions are in millimeters and inches unless otherwise specified. Values in brackets are standard equivalents.

Dimensions are shown for reference purposes only. Specifications subject to change.

USA: 1-800-522-6752
Canada: 1-905-470-4425
Mexico: 01-800-733-8926
C. America: 52-55-1106-0803

South America: 55-11-2103-6000
Hong Kong: 852-2735-1628
Japan: 81-44-844-8013
UK: 44-8706-080-208

Measurement Accessories (Continued)

In-Series Adapter (75 Ohm)

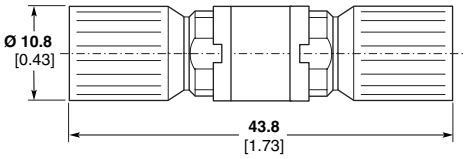

Adapter 1.6/5.6, Plug/Plug

Coupling Type	Part No.
A	1393681-6

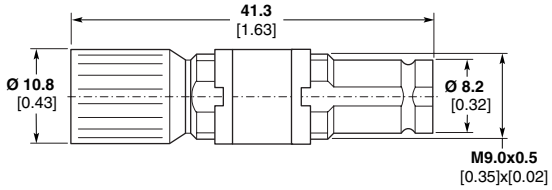

Adapter 1.6/5.6, Plug/Jack

Coupling Type	Part No.
A, B*, F*	1-1393681-7

*Jack side only

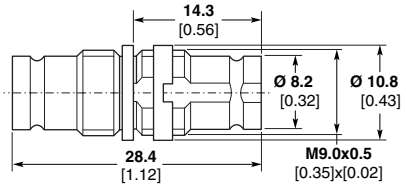

Adapter 1.6/5.6, Jack/Jack

Coupling Type	Part No.
A, B, F	1-1393665-1

Note:
U-link connectors see "1.6/5.6" section, page 146.

Note: Part Numbers are RoHS compliant except: ♦ Indicates non-RoHS compliant.

Catalog 1307191
Revised 3-07

www.tycoelectronics.com

Dimensions are in millimeters and inches unless otherwise specified. Values in brackets are standard equivalents.

Dimensions are shown for reference purposes only. Specifications subject to change.

USA: 1-800-522-6752
Canada: 1-905-470-4425
Mexico: 01-800-733-8926
C. America: 52-55-1106-0803

South America: 55-11-2103-6000
Hong Kong: 852-2735-1628
Japan: 81-44-844-8013
UK: 44-8706-080-208

Coaxial Cables

List of the coaxial cables that are listed in the various connector series of this section.

Characteristic Impedance (Ω)	Max. Cable Outer Diameter (mm)	Dielectric Diameter (mm)/ Material[1)]	Cable-Type Designation		
			VDE Designation[2)]	US Designation Manufacturer des.	IEC Designation 96-IEC
50	1.9	0.91max/PTFE	5YC5Ye 0.3/0.86	RG 178	50-1-1
50	2.1	0.87/PTFE	—	RG 196	50-1-2
50	2.25	1.71max/PTFE	5YK 0.51/1.68	RG 405	—
50	2.6	1.60max/PTFE	5YC5Ye 0.5/1.5	RG 316	50-2-1
50	2.8	1.60max/PE	2YCY 0.5/1.5	RG 174	—
50	3.0	1.52/PTFE	5YCC5Y 0.5/1.5	RD 316	—
50	3.6	3.01max/PTFE	5YK 0.9/3.0	RG 402	—
50	6.4	5.38max/PTFE	5YK 1.63/5.33	RG 401	—
75	2.67	1.68max/PTFE	5YC6Y 0.3/1.6	RG 179	75-2-1
75	3.0	1.60max/PTFE	—	RD 179	—
75	3.3	1.68max/Cell-FEP	06YCC(St)6Y 0.4/1.6	—	—
75	3.2	2.1max	—	ST 212	—
75	3.6	2.0max/Cell-PE	02Y(St)CY 0.45/2.0	—	—
75	4.0	2.0maxE/Cell-PE	02Y12YC(mS)C6Y 0.45/2.0	—	—
75	4.0	2.54max/PE	2YCY 0.4/2.5	—	—
75	4.8	2.54max/PE	2YCCY 0.4/2.5	—	—
75	5.0	2.54max/PE	2YC(mS)CY 0.4/2.5	—	—
75	6.1	4.25max/PE	2YCY 0.7/4.4	—	—
75	6.2	2.83max/PE	2YC(mS)CY 0.5/3.0	—	—
75	6.25	3.8max/PE	2YCY 0.58/3.7	RG 59	—
75	7.8	4.43max/PE	2YCCY 0.7/4.4	—	—
75	9.8	6.4/PE	2YCCY 1.0/6.5	—	—
75	9.8	6.4/PE	2YC(mS)CY 1.0/6.5	—	—

1) Material label

PTFE	Polytetrafluorethylene
PE	Polyethylene
FEP	Perfluorethylene propylene
PFA	Perfluoralkoxy copolymer

2) Mounting label of the VDE type numbers (from inside to outside)
Example:

Explanation

Dielectric and Jacket
- 2Y = PE
- 5Y = PTFE
- 02Y = Cell PE
- 06Y = Cell FEP
- 6Y = FEP

Screen:
- C = Cu braiding
- K = Cu tape

Intermediate layer:
- mS = magnetic screen
- St = static screen

Specifications on inner conductor:
- vs = silver plated
- staku = Bare copper-clad steel wire conductor

Jacket color:
- gn = green
- gr = grey
- rt = red
- ws = white

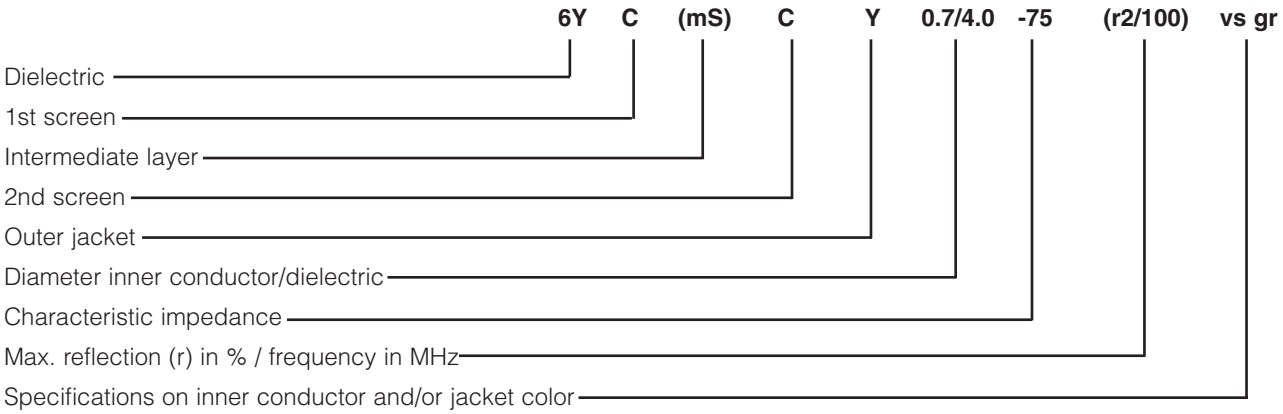

Catalog 1307191
Revised 3-07

www.tycoelectronics.com

Dimensions are in millimeters and inches unless otherwise specified. Values in brackets are standard equivalents.

Dimensions are shown for reference purposes only. Specifications subject to change.

USA: 1-800-522-6752
Canada: 1-905-470-4425
Mexico: 01-800-733-8926
C. America: 52-55-1106-0803

South America: 55-11-2103-6000
Hong Kong: 852-2735-1628
Japan: 81-44-844-8013
UK: 44-8706-080-208

SMP Microminiature Push-On Coaxial Connectors

Product Facts

- **Intermateable with Corning Gilbert GPO Series Connector**
- **DESC approved**
- **Enhanced performance features**
- **Simplified Assembly**

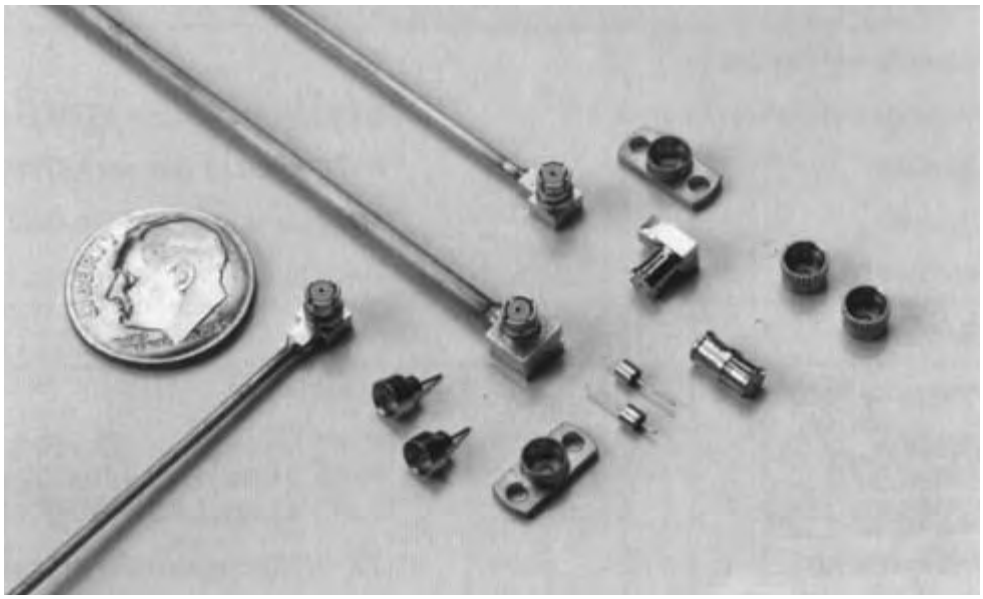

SMP microminiature push-on coaxial connectors provide solutions for today's modular designs with denser packaging requirements. The extremely small size of the SMP offers a versatile solution for high density packaging allowing connector center-to-center spacing of 4.32 [0.17]. The push-on interface facilitates easier assembly and test with a positive snap-in feature to indicate a fully mated connection. The rugged SMP interface can withstand harsh environments of mechanical shock and vibration, typically found in military or aerospace related applications. This SMP connector interface is the standard used by Defense Electronics Supply Center (DESC) to generate the SMP push-on connector series.

SMP connectors can be your design solution for mechanical packaging and frequency response. The SMP interface provides 0.020" of radial misalignment for critical blindmate applications. Mating forces are strictly controlled to ensure reliable connections per mated pair or when simultaneously mating multiple connectors. Cable jacks include an anti-rocking ring to ensure reliable mechanical performance regardless of the operating environment. SMP connectors offer enhanced broadband VSWR performance of 1.15:1 max thru 26GHz and 1.40:1 max thru 40GHz.

Standard design SMP configurations include cable connectors, straight and right-angle, for 0.047 and 0.085 semi-rigid cable, full detent, limited detent and smooth bore mating shrouds that can be bulkhead or flange mounted and glass feedthroughs for coax to circuit launchers. In-series adapters for module to module intermating and between series adapters for integrating or testing systems or components parameters.

Between Series Adapters

For SMP Between Series Adapters, see pages 253-262.

SMP Shroud and Jack to Jack Adapter Assembly

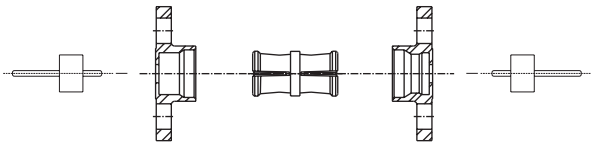

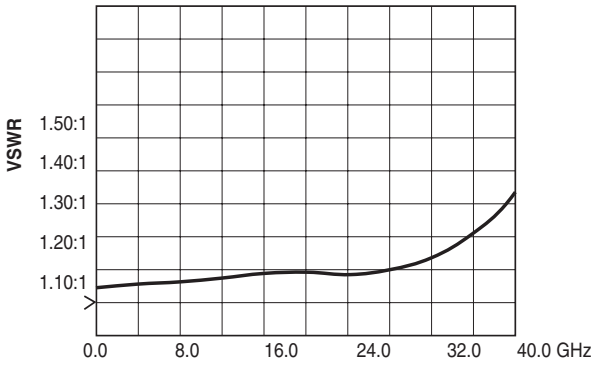

Typical VSWR for SMP Jack to Jack Adapter Part Numbers 1056700-1 and 1056721-1

GPO is a trademark of Corning Gilbert, Inc.

Note: Part Numbers are RoHS compliant except: ♦ Indicates non-RoHS compliant.

Catalog 1307191
Revised 3-07

www.tycoelectronics.com

Dimensions are in millimeters and inches unless otherwise specified. Values in brackets are standard equivalents.

Dimensions are shown for reference purposes only. Specifications subject to change.

USA: 1-800-522-6752
Canada: 1-905-470-4425
Mexico: 01-800-733-8926
C. America: 52-55-1106-0803

South America: 55-11-2103-6000
Hong Kong: 852-2735-1628
Japan: 81-44-844-8013
UK: 44-8706-080-208

SMP Microminiature Push-On Coaxial Connectors (Continued)

Specifications

General		
Materials and Finishes		
Housings and Center Contacts	Beryllium Copper per ASTM-B-196; gold plate over nickel plate	
Dielectric	PTFE Fluorocarbon per ASTM-D-1457	
Shrouds	Stainless steel per ASTM-A582 Type 303; passivate per ASTM-A380	
Hermetic Seal	Glass bead	
Electrical		
Frequency Range	dc - 40.0 GHz	
VSWR	1.10:1 Maximum dc - 23.0 GHz	
	1.15:1 Maximum 23.0 - 26.0 GHz	
	1.40:1 Maximum 26.0 - 40.0 GHz	
Voltage Rating	335 Vrms maximum at sea level	
Insertion Loss	0.10 $f\sqrt{(GHz)}$ maximum	
Insulation Resistance	5000 megohms minimum	
Dielectric Withstanding Voltage	500 volts (VRMS minimum)	
RF High Potential	325 volts (VRMS minimum) @ 5 MHz	
Impedance	50 ohms nominal	
RF Leakage	-80dB to 3 GHz, -65dB from 3 to 26.5 dB minimum	
Contact Resistance	Initial center contact 6.0 milliohms maximum	
	Outer contact 2.0 milliohms maximum	
Mechanical		
Durability	100 mating cycles minimum	
Radial Misalignment	±0.020 minimum	
Axial Misalignment	.000/.010	
Force to Engage	full detent	15.0 lbs. maximum
	half detent	10.0 lbs. maximum
	smooth bore	2.0 lbs. maximum
Force to Disengage	full detent	5.0 lbs. minimum
	half detent	2.0 lbs. minimum
	smooth bore	0.5 lbs. minimum
Center Contact Retention	1.5 lbs. minimum axial force	
Environmental		
Operating Temperature	-65°C to +165°C	
Vibration	per mil-std-202, method 204, test condition D	
Shock	per mil-std-202, method 213, test condition I	
Thermal Shock	per mil-std-202, method 107, test condition B	
Moisture Resistance	per MIL-STD-202 method 106, except step 7b shall be omitted. Resistance shall be 200 megohms within 5 minutes after removal from humidity.	

Interface Dimensions

Jack

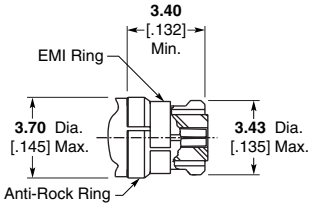

Shroud

Full Detent

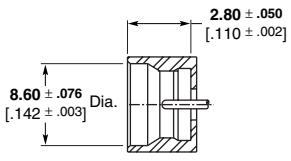

Bullet

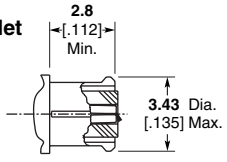

Smooth Bore

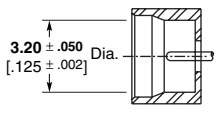

Note: The U.S. Government (DESC) has determined that the above specified interface dimensions are interchangeable and intermateble with Corning Gilbert GPO Series RF Connectors.[1]

GPO is a trademark of Corning Gilbert, Inc.

[1] Per DESC drawing numbers 94007 and 94008, series SMP.

Catalog 1307191
Revised 3-07

www.tycoelectronics.com

Dimensions are in millimeters and inches unless otherwise specified. Values in brackets are standard equivalents.

Dimensions are shown for reference purposes only. Specifications subject to change.

USA: 1-800-522-6752
Canada: 1-905-470-4425
Mexico: 01-800-733-8926
C. America: 52-55-1106-0803

South America: 55-11-2103-6000
Hong Kong: 852-2735-1628
Japan: 81-44-844-8013
UK: 44-8706-080-208

SMP Microminiature Push-On Coaxial Connectors (Continued)

Straight Cable Jack, Solder Attachment

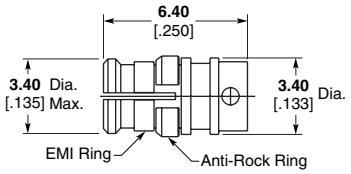

Cable	Part No.
.047 Semi-Rigid	**1056526-1**
.085 Semi-Rigid (RG 405)	**1056527-1**

Right-Angle Cable Jack, Solder Attachment

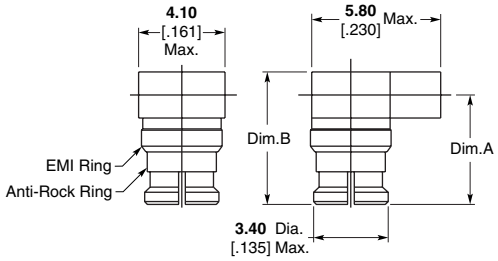

Cable	Dim. A	Dim. B	Part No.
.047 Semi-Rigid	**4.8** .190	**5.8** .230	**1056553-1**
.085 Semi-Rigid (RG 405)	**5.3** .209	**6.7** .265	**1056554-1**

Jack to Jack Adapter (Bullet)

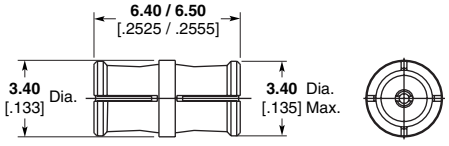

Part No.
1056700-1

Note: Part Numbers are RoHS compliant except: ♦ Indicates non-RoHS compliant.

Catalog 1307191
Revised 3-07

www.tycoelectronics.com

Dimensions are in millimeters and inches unless otherwise specified. Values in brackets are standard equivalents.

Dimensions are shown for reference purposes only. Specifications subject to change.

USA: 1-800-522-6752
Canada: 1-905-470-4425
Mexico: 01-800-733-8926
C. America: 52-55-1106-0803

South America: 55-11-2103-6000
Hong Kong: 852-2735-1628
Japan: 81-44-844-8013
UK: 44-8706-080-208

SMP Microminiature Push-On Coaxial Connectors (Continued)

Shroud — Threaded

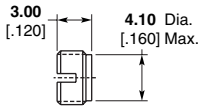

Description	Part No.
Full Detent	**1056745-1**
Limited Detent	**1056743-1**
Smooth Bore	**1056744-1**

Shroud — 2 Hole Flange Surface Mount

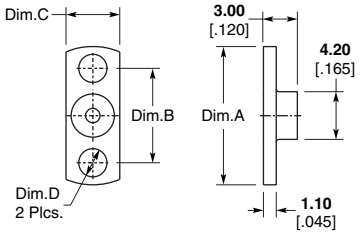

Description	Dim. A	Dim. B	Dim. C	Dim. D	Part No.
Full Detent	**12.2** .480	**8.3** .328	**4.7** .187	**2.5** .098	**1056721-1**
	15.8 .625	**12.2** .481	**5.7** .223	**2.6** .102	**1056722-1**
	10.2 .400	**7.2** .282	**4.2** .165	**1.9** .073	**1056724-1**
Limited Detent	**12.2** .480	**8.3** .328	**4.7** .187	**2.5** .098	**1056729-1**
	10.2 .400	**7.2** .282	**4.2** .165	**1.9** .073	**1056731-1**

Shroud — Press Fit

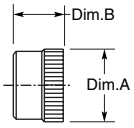

Description	Dim. A	Dim. B	Part No.
Limited Detent	**3.9** .154	**2.0** .080	**1056736-1**

Note: Part Numbers are RoHS compliant except: ♦ Indicates non-RoHS compliant.

Catalog 1307191
Revised 3-07

www.tycoelectronics.com

Dimensions are in millimeters and inches unless otherwise specified. Values in brackets are standard equivalents.

Dimensions are shown for reference purposes only. Specifications subject to change.

USA: 1-800-522-6752
Canada: 1-905-470-4425
Mexico: 01-800-733-8926
C. America: 52-55-1106-0803

South America: 55-11-2103-6000
Hong Kong: 852-2735-1628
Japan: 81-44-844-8013
UK: 44-8706-080-208

SMP Microminiature Push-On Coaxial Connectors (Continued)

Shroud — Solder-In Hermetic

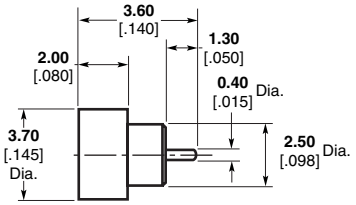

Description	Part No.
Full Detent	**1056750-1**
Limited Detent	**1056751-1**
Smooth Bore	**1056752-1**

Glass Bead Assembly

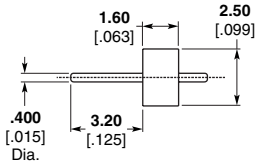

Part No.
1056728-1

Plug, Straight, Full Detent

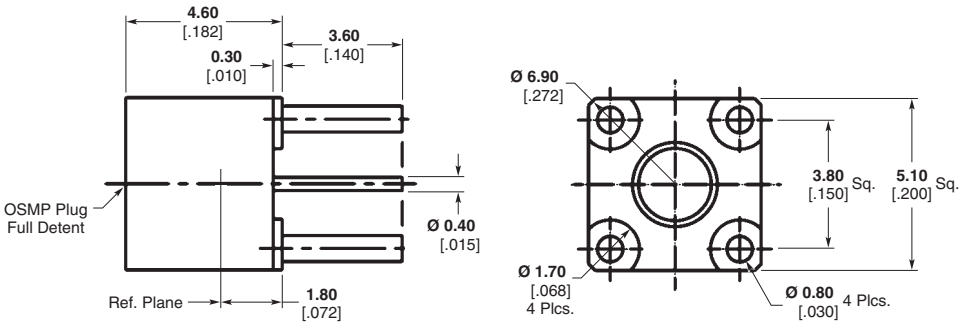

Plug, Right-Angle, Limited Detent

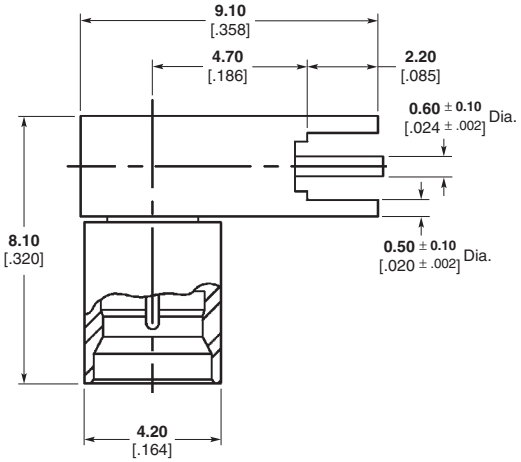

M/A-COM Model Number	Part No.
2965-5006-62	**1061692-1**

Note: Part Numbers are RoHS compliant except: ♦ Indicates non-RoHS compliant.

Catalog 1307191
Revised 3-07

www.tycoelectronics.com

Dimensions are in millimeters and inches unless otherwise specified. Values in brackets are standard equivalents.

Dimensions are shown for reference purposes only. Specifications subject to change.

USA: 1-800-522-6752
Canada: 1-905-470-4425
Mexico: 01-800-733-8926
C. America: 52-55-1106-0803

South America: 55-11-2103-6000
Hong Kong: 852-2735-1628
Japan: 81-44-844-8013
UK: 44-8706-080-208

OSP Miniature Modular Blind Mate Connectors

Product Facts

- **Interface designed for multiple interconnects**
- **For high performance microwave system requirements**
- **Module to module, module to motherboard, fixed and float mount**
- **Bulkhead or panel mount**
- **For flexible and semi-rigid cable**



OSP miniature connectors for semi-rigid cable meet high performance requirements for microwave multiple interconnects. Standard units are available in bulkhead or panel mount designs for either direct solder or solderless compression crimp attachment. Complete tooling for both versions is located in the Tooling Section of this catalog.

Jack connectors are available in either float or rigid mount. Rigid mount units will function to specifications up to ±.10 [.004] radial misalignment with the mating plug connector. Applications requiring greater than ±.10 [.004] radial misalignment can use either the float design or floating connector plates with guide pins.

The solderless compression crimp attachment meets high performance requirements for microwave system applications. The cable attachment is permanent and highly reliable.

Ease of assembly permits users unskilled in soldering techniques to rapidly produce cable assemblies with consistently excellent mechanical and electrical performance.

Catalog 1307191
Revised 3-07

www.tycoelectronics.com

Dimensions are in millimeters and inches unless otherwise specified. Values in brackets are standard equivalents.

Dimensions are shown for reference purposes only. Specifications subject to change.

USA: 1-800-522-6752
Canada: 1-905-470-4425
Mexico: 01-800-733-8926
C. America: 52-55-1106-0803

South America: 55-11-2103-6000
Hong Kong: 852-2735-1628
Japan: 81-44-844-8013
UK: 44-8706-080-208

OSP Miniature Modular Blind Mate Connectors (Continued)

The specifications given refer specifically to mated pair of Part Numbers 1059410-1 and 1059402-1 (RG 402) and 1059412-1 and 1059404-1 (RG 405). Specifications on other connectors are available on request.

The general electrical, mechanical and environmental specifications in the following table are recommended for procurement documents or drawings.

Engineering Data

Impedance —	50 ohms	
Frequency —	dc to 22.0 GHz	
Temperature Rating —	-65° to 125° C	
Electrical	**RG 402 (.141) Semi-Rigid**	**RG 405 (.085) Semi-Rigid**
VSWR —		
dc - 18.0 GHz	1.02 + .005f (GHz)	1.05 + .005f (GHz)
18.0 - 22.0 GHz	1.02 + .008f (GHz)	1.05 + .009f (GHz)
RF Transmission Loss —	.03 x $\sqrt{f}$ (GHz)	.03 x $\sqrt{f}$ (GHz)
Insulation Resistance —	5,000 megohms min.	5,000 megohms min.
Contact Resistance —		
Center Contact	2.0 milliohms max.	2.0 milliohms max.
Outer Contact	2.0 milliohms max.	2.0 milliohms max.
Outer Contact to Cable	0.5 milliohms max.	0.5 milliohms max.
Dielectric Withstanding Voltage —	1500 volts RMS	1000 volts RMS
Corona Extinction Voltage at 70,000 Ft.—	375 volts min.	335 volts min.
RF High Potential at 5 MHz —	1,000 volts RMS	670 volts RMS
RF Leakage Interface Only —	-(90-fGHz) dB min. (fully mated)	-(90-fGHz) dB min. (fully mated)
Power Handling —	300W at 3 GHz (sea level) and room temperature	

Environmental

Corrosion —	Method 101, Condition B, MIL-STD-202
Vibration —	Method 204, Condition D, 20G's, MIL-STD-202
Shock —	Method 213, Condition I, 100G's, MIL-STD-202
Temperature Cycling —	Method 107, Condition B, MIL-STD-202
Moisture Resistance —	Method 106, MIL-STD-202

Material

Housing —	Corrosion resistant steel Type 303 (stainless) per ASTM A484 and A582
Center Contact —	Beryllium copper per ASTM-B-196
Dielectric —	TFE fluorocarbon per ASTM-D-1457
Gasket (O'Ring) —	MIL-P-25732

Mechanical

Force to Engage —	3 pounds max.
Force to Disengage —	1.5 pounds max.
Center Contact Retention —	6 pounds min.
Durablilty —	5,000 Cycles
Radial Misalignment —	
Rigid Mount	±.10 [±. 004]
Float Mount	±.51 [±.020]

Mating Characteristics

Jack Connector —		
Center Contact Socket	Oversize test Pin —	.945 + .003 [.0372 + .0001] dia.
	Test Pin Finish —	16 micro inch
	Insertion Depth —	.76/1.14 [.030/.045]
	Number of Insertions —	3
Insertion Force	Test Pin —	.940 + .003 [.0370 + .0001] dia.
	Test Pin Finish —	16 micro inch
	Insertion Depth —	1.27/1.91 [.050/.075]
	Insertion Force —	3 pounds max.
Withdrawal Force	Test Pin —	.90 + .003 [.0355 - .0001] dia.
	Test Pin Finish —	16 micro inch
	Insertion Depth —	1.27/1.91 [.050/.075]
	Withdrawal —	1 ounce min.

Finish

Center Contact —	Gold plate per MIL-G-45204, Type II, Class 1 over copper plate per MIL-C-14550
Housing —	Gold plate per MIL-G-45204, Typ II, Class 0 over nickel plate per QQ-N-290, Class 2 or passivate per ASTM-A380

All dimensions shown are nominal. Contact the factory for specific tolerances.

Catalog 1307191
Revised 3-07

www.tycoelectronics.com

Dimensions are in millimeters and inches unless otherwise specified. Values in brackets are standard equivalents.

Dimensions are shown for reference purposes only. Specifications subject to change.

USA: 1-800-522-6752
Canada: 1-905-470-4425
Mexico: 01-800-733-8926
C. America: 52-55-1106-0803

South America: 55-11-2103-6000
Hong Kong: 852-2735-1628
Japan: 81-44-844-8013
UK: 44-8706-080-208

OSP Miniature Modular Blind Mate Connectors (Continued)
Interface Mating Dimensions

The connector interface, specifically designed for multiple interconnects, maintains reliable performance over the typical mechanical tolerance required in cost effective packaging.

The interface test data shows excellent performance is maintained with mating gaps up to 0.38 [.015].

Meets MIL-STD-348 Figure 321. Intermateable to BMA Connectors.

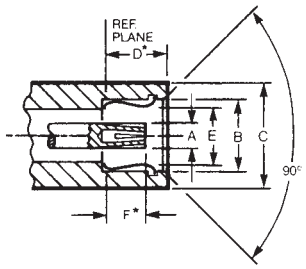

Jack

Letter	Dimensions
A	**1.78** .070 Nom.
B	**5.72** .225 Min.
C	**7.62** .300 Ref.
D	**5.00** .197 Nom.*
E	**5.08** .200 Max.
F	**3.23** .127 Max.*

*With spring bottomed

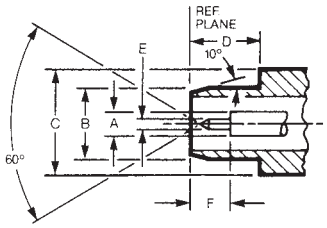

Plug

Letter	Dimensions
A	**1.78** .070 Nom.
B	**5.33** .210 Nom.
C	**7.62** .300 Ref.
D	**5.05** .199 Min.
E	**0.91** .036 Nom.
F	**3.25** .128 Min.

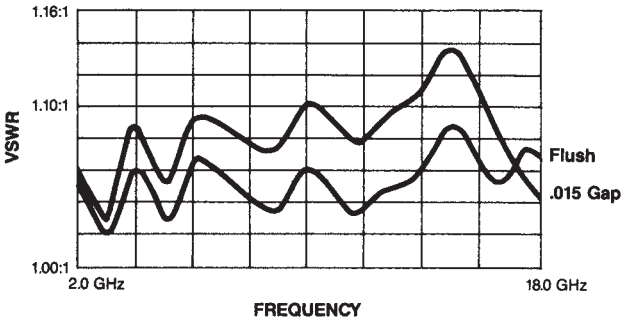

Catalog 1307191
Revised 3-07

www.tycoelectronics.com

Dimensions are in millimeters and inches unless otherwise specified. Values in brackets are standard equivalents.

Dimensions are shown for reference purposes only. Specifications subject to change.

USA: 1-800-522-6752
Canada: 1-905-470-4425
Mexico: 01-800-733-8926
C. America: 52-55-1106-0803

South America: 55-11-2103-6000
Hong Kong: 852-2735-1628
Japan: 81-44-844-8013
UK: 44-8706-080-208

OSP Miniature Modular Blind Mate Connectors (Continued)
For Semi-Rigid Cable, Direct Solder Attachment

Bulkhead Feedthrough Cable Plug Rear Mount



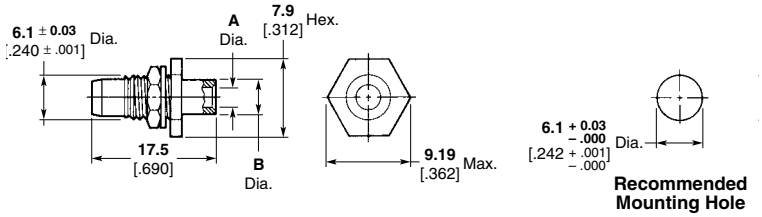

Cable	Plating	Dimensions A	Dimensions B	Part No.
RG 402/U **3.58** .141	Gold	**3.7** .144	**4.6** .180	**1059402-1**
RG 405/U **2.16** .085	Gold	**2.3** .089	**3.0** .120	**1059404-1**

Bulkhead Feedthrough Cable Jack Rigid Rear Mount



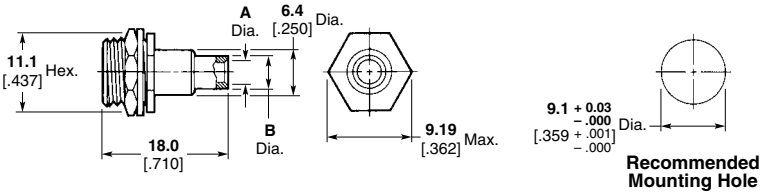

Cable	Plating	Dimensions A	Dimensions B	Part No.
RG 402/U **3.58** .141	Gold	**3.7** .144	**4.6** .180	**1059410-1**
RG 405/U **2.16** .085	Gold	**2.3** .089	**3.0** .120	**1059412-1**

Flange Mount Cable Jack Floating Rear Mount



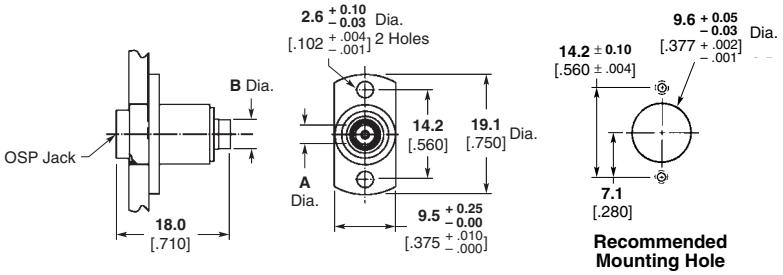

Cable	Dimensions A	Dimensions B	Part No.
RG 402/U **3.58** .141	**3.7** .144	**4.6** .180	**1059453-1**
RG 405/U **2.16** .085	**2.3** .089	**3.0** .120	**1059456-1**

Finish: Inner housing that is soldered to cable is gold plated. Outer housing is passivated stainless steel.
When using semi-rigid cable, it is recommended that a service loop be used to facilitate the float features of the connector.

Note: Part Numbers are RoHS compliant except: ♦ Indicates non-RoHS compliant.

Catalog 1307191
Revised 3-07

www.tycoelectronics.com

Dimensions are in millimeters and inches unless otherwise specified. Values in brackets are standard equivalents.

Dimensions are shown for reference purposes only. Specifications subject to change.

USA: 1-800-522-6752
Canada: 1-905-470-4425
Mexico: 01-800-733-8926
C. America: 52-55-1106-0803

South America: 55-11-2103-6000
Hong Kong: 852-2735-1628
Japan: 81-44-844-8013
UK: 44-8706-080-208

OSP Miniature Modular Blind Mate Connectors (Continued)
For Semi-Rigid Cable, Direct Solder Attachment (Continued)

Low Profile — Bulkhead Feedthrough Cable Jack — Floating Rear Mount



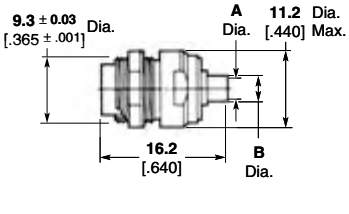

Cable	Plating	Dimensions A	Dimensions B	Part No.
RG 402/U **3.58** .141	Gold	**3.7** .144	**4.6** .180	**1059505-1**
RG 405/U **2.16** .085	Gold	**2.3** .089	**3.0** .120	**1059506-1**

When using semi-rigid cable, it is recommended that a service loop be used to facilitate the float features of the connector.

Low Profile — Panel Feedthrough Cable Jack — Floating Rear Mount



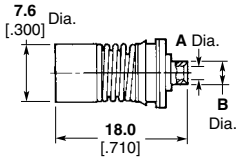

Cable	Plating	Dimensions A	Dimensions B	Part No.
RG 402/U **3.58** .141	Gold	**3.7** .144	**4.6** .180	**1059465-1**
RG 405/U **2.16** .085	Gold	**2.3** .089	**3.0** .120	**1059467-1**

Recommended removal tool part number 1059774-1 is described in the Tooling Section of this catalog.
When using semi-rigid cable, it is recommended that a service loop be used to facilitate the float features of the connector.

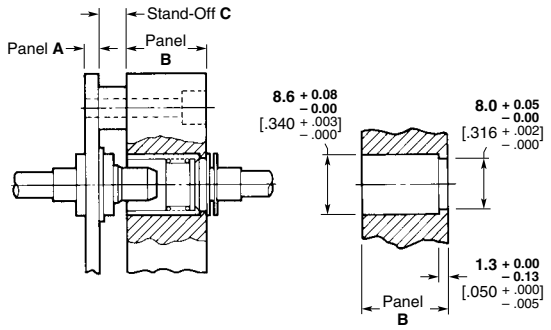

Recommended Mounting Detail

Panel A ±.003	Panel B ±.003	Stand-Off Panel C +.050/–.000
2.3 .090	**9.5** .375	**7.2** .285
2.3 .090	**11.1** .438	**5.6** .222
2.3 .090	**12.7** .500	**4.1** .160
3.2 .125	**9.5** .375	**6.4** .250
3.2 .125	**11.1** .438	**4.7** .187
3.2 .125	**12.7** .500	**3.2** .125

Note: Part Numbers are RoHS compliant except: ♦ Indicates non-RoHS compliant.

Catalog 1307191
Revised 3-07

www.tycoelectronics.com

Dimensions are in millimeters and inches unless otherwise specified. Values in brackets are standard equivalents.

Dimensions are shown for reference purposes only. Specifications subject to change.

USA: 1-800-522-6752
Canada: 1-905-470-4425
Mexico: 01-800-733-8926
C. America: 52-55-1106-0803

South America: 55-11-2103-6000
Hong Kong: 852-2735-1628
Japan: 81-44-844-8013
UK: 44-8706-080-208

OSP Miniature Modular Blind Mate Connectors (Continued)
For Semi-Rigid Cable, Solderless Compression Crimp Attachment

Bulkhead Feedthrough Cable Plug Fixed Rear Mount



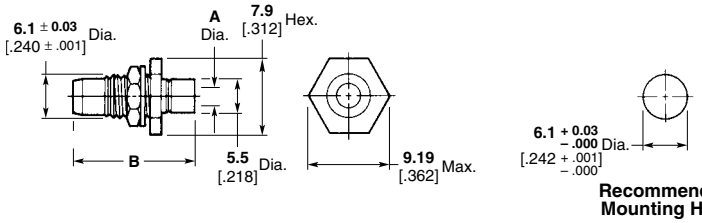

Cable	Plating	Dim. A	Dim. B		Part No.
			Before Crimping	After Crimping	
RG 405/U **2.16** .085	Passivated Stainless Steel	**2.2** .088	**19.8** .782	**17.2** .677	**1059399-1**

Outline drawing shows after crimp dimensions.

Bulkhead Feedthrough Cable Jack Fixed Rear Mount



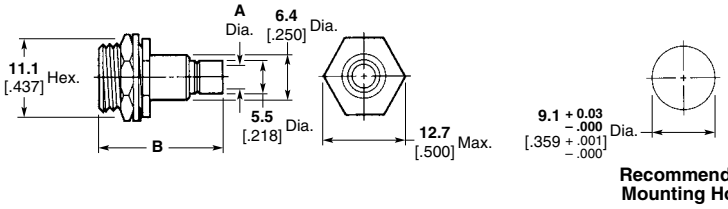

Cable	Plating	Dim. A	Dim. B		Part No.
			Before Crimping	After Crimping	
RG 402/U **3.58** .141	Passivated Stainless Steel	**3.6** .143	**21.1** .830	**18.2** .715	**1059408-1**

Outline drawing shows after crimp dimensions.

Flange Mount Cable Jack Floating Rear Mount



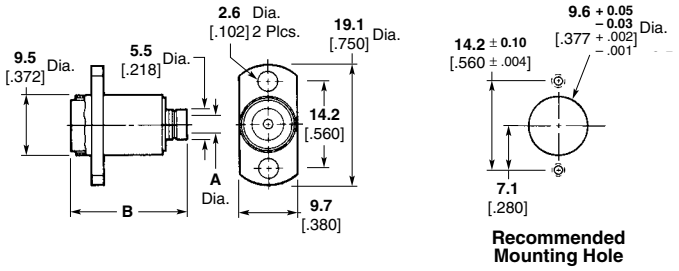

Cable	Plating	Dim. A	Dim. B		Part No.
			Before Crimping	After Crimping	
RG 402/U **3.58** .141	Passivated Stainless Steel	**3.6** .143	**22.6** .891	**19.8** .780	**1059451-1**
RG 405/U **2.16** .085	Passivated Stainless Steel	**2.2** .088	**22.6** .891	**19.8** .780	**1059452-1**

Outline drawing shows after crimp dimensions.
When using semi-rigid cable, it is recommended that a service loop be used to facilitate the float features of the connector.

Note: Part Numbers are RoHS compliant except: ♦ Indicates non-RoHS compliant.

Catalog 1307191
Revised 3-07

www.tycoelectronics.com

Dimensions are in millimeters and inches unless otherwise specified. Values in brackets are standard equivalents.

Dimensions are shown for reference purposes only. Specifications subject to change.

USA: 1-800-522-6752
Canada: 1-905-470-4425
Mexico: 01-800-733-8926
C. America: 52-55-1106-0803

South America: 55-11-2103-6000
Hong Kong: 852-2735-1628
Japan: 81-44-844-8013
UK: 44-8706-080-208

OSP Miniature Modular Blind Mate Connectors (Continued)
For Flexible Cable, Crimp Attachment

Bulkhead Feedthrough Cable Plug Rear Mount



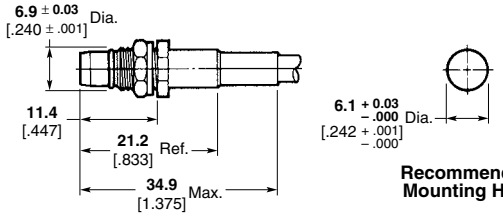

Cable	Plating	Part No.
RG 174/U, 179, 187, 188, 316	Passivated Stainless Steel	**1059523-1**

Bulkhead Feedthrough Cable Jack Rigid Rear Mount



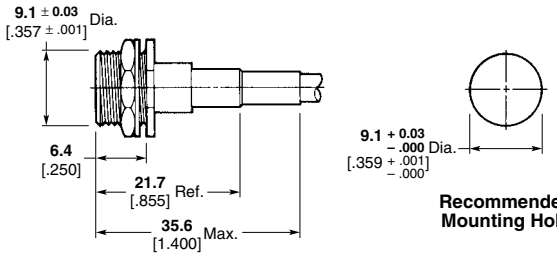

Cable	Plating	Part No.
RG 55/U, 142, 223, 400	Passivated Stainless Steel	**1059525-1**

Flange Mount Cable Jack Floating Rear Mount



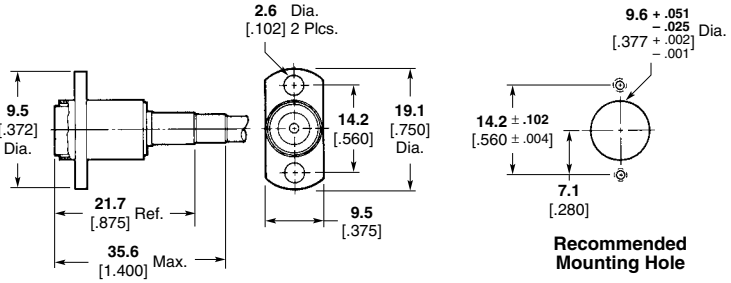

Cable	Plating	Part No.
RG 55/U, 142, 223, 400	Passivated Stainless Steel	**1059540-1**
RG 174/U, 179, 187, 188, 316	Passivated Stainless Steel	**1059541-1**
RG 178, Double Braid	Passivated Stainless Steel	**1058572-1**

Low Profile — Panel Feedthrough Cable Jack — Rear Mount



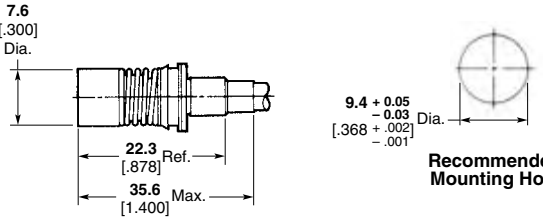

Cable	Plating	Part No.
RG 174/U, 179, 187, 188, 316	Passivated Stainless Steel	**1059551-1**

Refer to Recommended Mounting Hole Detail for Semi-Rigid Cable Low Profile Feedthrough Cable Jack.
Recommended removal tool part number 1059774-1 as described in the Tooling Section of this catalog.

Note: Part Numbers are RoHS compliant except: ♦ Indicates non-RoHS compliant.

Catalog 1307191
Revised 3-07

www.tycoelectronics.com

Dimensions are in millimeters and inches unless otherwise specified. Values in brackets are standard equivalents.

Dimensions are shown for reference purposes only. Specifications subject to change.

USA: 1-800-522-6752
Canada: 1-905-470-4425
Mexico: 01-800-733-8926
C. America: 52-55-1106-0803

South America: 55-11-2103-6000
Hong Kong: 852-2735-1628
Japan: 81-44-844-8013
UK: 44-8706-080-208

OSP Miniature Modular Blind Mate Connectors (Continued)
Panel Mount

Straight Terminal

2-Hole Flange Mount Plug Receptacle



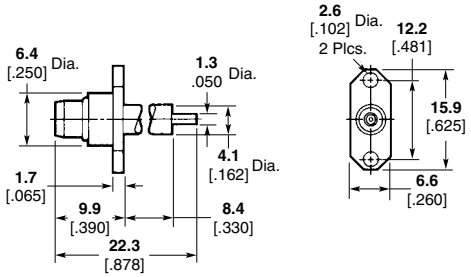

Plating	Part No.
Passivated Stainless Steel	1059566-1

2-Hole Flange Mount Jack Receptacle



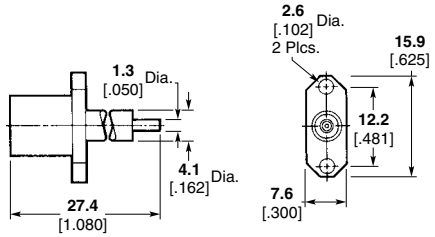

Plating	Part No.
Passivated Stainless Steel	1059596-1

4-Hole Flange Mount Plug Receptacle



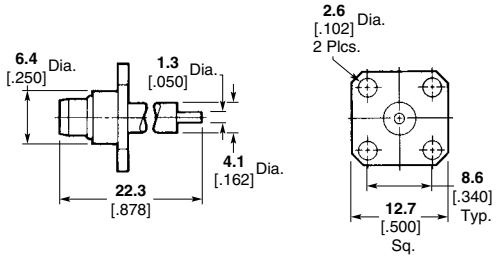

Plating	Part No.
Passivated Stainless Steel	1059563-1

4-Hole Flange Mount Jack Receptacle



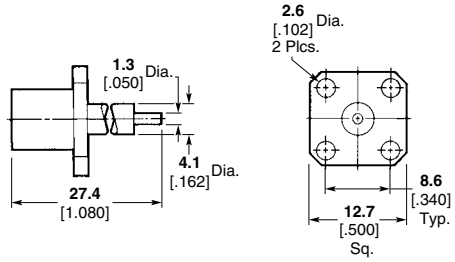

Plating	Part No.
Passivated Stainless Steel	1059594-1

Note: Part Numbers are RoHS compliant except: ♦ Indicates non-RoHS compliant.

Catalog 1307191
Revised 3-07

www.tycoelectronics.com

Dimensions are in millimeters and inches unless otherwise specified. Values in brackets are standard equivalents.

Dimensions are shown for reference purposes only. Specifications subject to change.

USA: 1-800-522-6752
Canada: 1-905-470-4425
Mexico: 01-800-733-8926
C. America: 52-55-1106-0803

South America: 55-11-2103-6000
Hong Kong: 852-2735-1628
Japan: 81-44-844-8013
UK: 44-8706-080-208

OSP Miniature Modular Blind Mate Connectors (Continued)
Panel Mount (Continued)

Straight Terminal

Threaded Installation — Panel Feedthrough Plug Receptacle



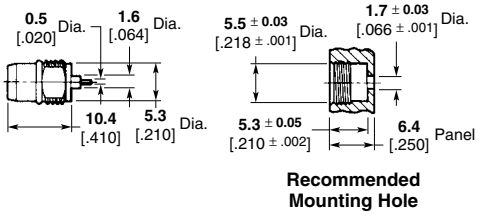

Recommended Mounting Hole

Plating	Part No.
Passivated Stainless Steel	**1059617-1**

Threaded Installation — Panel Feedthrough Jack Receptacle



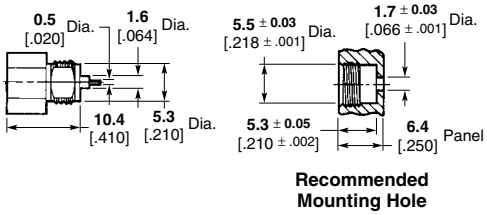

Recommended Mounting Hole

Plating	Part No.
Passivated Stainless Steel	**1059657-1**

Press Fit Installation — Panel Feedthrough Plug Receptacle





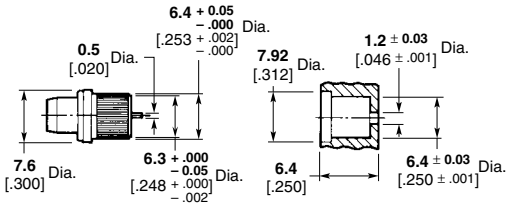

Recommended Mounting Hole

Plating	Part No.
Passivated Stainless Steel	**1059651-1**

Press Fit Installation — Panel Feedthrough Jack Receptacle





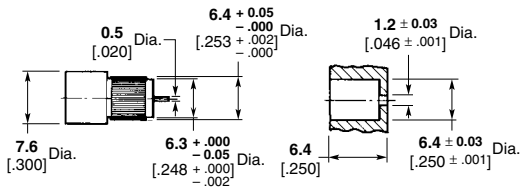

Recommended Mounting Hole

Plating	Part No.
Passivated Stainless Steel	**1059654-1**

Note: Part Numbers are RoHS compliant except: ♦ Indicates non-RoHS compliant.

Catalog 1307191
Revised 3-07

www.tycoelectronics.com

Dimensions are in millimeters and inches unless otherwise specified. Values in brackets are standard equivalents.

Dimensions are shown for reference purposes only. Specifications subject to change.

USA: 1-800-522-6752
Canada: 1-905-470-4425
Mexico: 01-800-733-8926
C. America: 52-55-1106-0803

South America: 55-11-2103-6000
Hong Kong: 852-2735-1628
Japan: 81-44-844-8013
UK: 44-8706-080-208

OSP Miniature Modular Blind Mate Connectors (Continued)
Printed Circuit Board Mount

Straight Plug Receptacle — Captured Contact



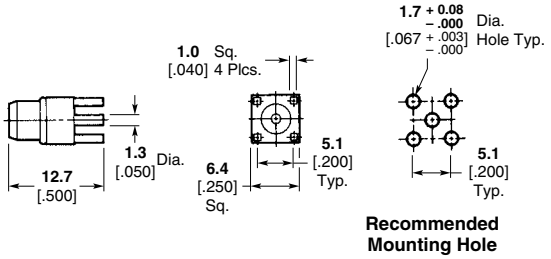

Plating	Part No.
Gold	1059684-1

Straight Jack Receptacle — Captured Contact



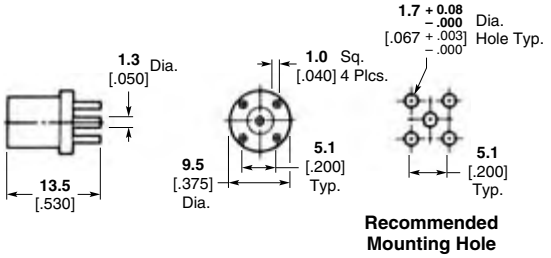

Plating	Part No.
Gold	1059681-1

Right-Angle Plug Receptacle — Captured Contact



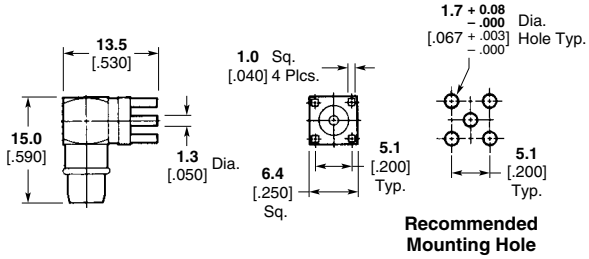

Plating	Part No.
Gold	1059691-1

Surface Mount Vertical Plug with Small Leg

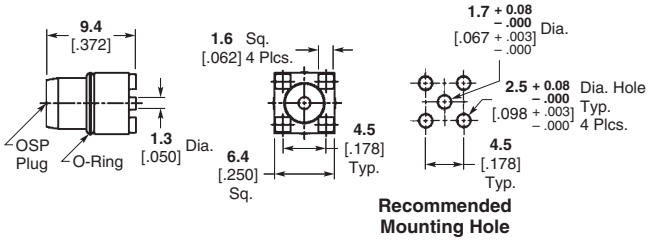

Plating	Part No.
Gold	1253111-1

Note: Part Numbers are RoHS compliant except: ♦ Indicates non-RoHS compliant.

Catalog 1307191
Revised 3-07

www.tycoelectronics.com

Dimensions are in millimeters and inches unless otherwise specified. Values in brackets are standard equivalents.

Dimensions are shown for reference purposes only. Specifications subject to change.

USA: 1-800-522-6752
Canada: 1-905-470-4425
Mexico: 01-800-733-8926
C. America: 52-55-1106-0803

South America: 55-11-2103-6000
Hong Kong: 852-2735-1628
Japan: 81-44-844-8013
UK: 44-8706-080-208

OSP Miniature Modular Blind Mate Connectors (Continued)
Hermetically Sealed

Metal-To-Metal

Rigid Gasket Seal — Panel Feedthrough Plug Receptacle



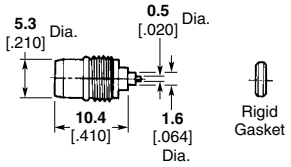

VSWR (GHz)	RF Leakage (dB)	Plating	Part No.
1.04 + .009f	–(90-fGHz)	Passivated stainless steel	**6059632-1**

Installation Thermal Limit: 250°C.
Recommended Mounting Hole Detail A follows, pg 168.

Rigid Gasket Seal — Panel Feedthrough Jack Receptacle



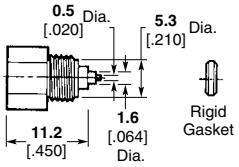

VSWR (GHz)	RF Leakage (dB)	Plating	Part No.
1.04 + .009f	–(90-fGHz)	Passivated stainless steel	**6059665-1**

Installation Thermal Limit: 250°C.
Recommended Mounting Hole Detail A follows, pg 168.

Field Replaceable Solder and Braze-In

Panel Feedthrough Plug Receptacle



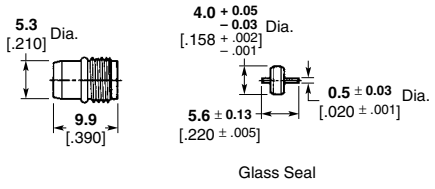

VSWR (GHz)	RF Leakage (dB)	Plating	Part No.
1.06 + .01f	–(90-fGHz)	Passivated stainless steel	**1059637-1**

Recommended Mounting Detail B or E follows, pg 168.

Note: Part Numbers are RoHS compliant except: ♦ Indicates non-RoHS compliant.

Catalog 1307191
Revised 3-07

www.tycoelectronics.com

Dimensions are in millimeters and inches unless otherwise specified. Values in brackets are standard equivalents.

Dimensions are shown for reference purposes only. Specifications subject to change.

USA: 1-800-522-6752
Canada: 1-905-470-4425
Mexico: 01-800-733-8926
C. America: 52-55-1106-0803

South America: 55-11-2103-6000
Hong Kong: 852-2735-1628
Japan: 81-44-844-8013
UK: 44-8706-080-208

OSP Miniature Modular Blind Mate Connectors (Continued)
Hermetically Sealed (Continued)

Field Replaceable Solder and Braze-In
(Continued)

Panel Feedthrough Jack Receptacle



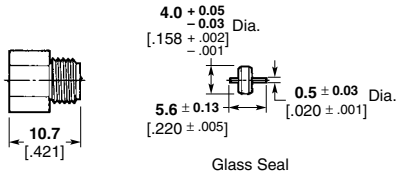

VSWR (GHz)	RF Leakage (dB)	Plating	Part No.
1.06 + .01f	–(90-fGHz)	Passivated stainless steel	**1059671-1**

Recommended Mounting Detail B or E follows at bottom of this page.

2-Hole Flange Mount Plug Receptacle With EMI/RFI Gasket — 0.5 [.018] Dia. Contact



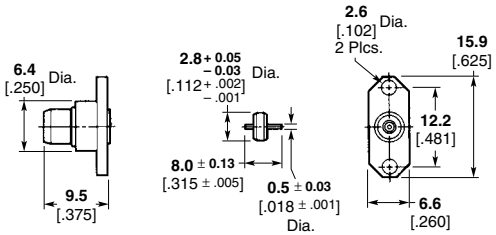

VSWR (GHz)	RF Leakage (dB)	Plating	Part No.
1.06 + .01f	–(90-fGHz)	Passivated stainless steel	**1059572-1**

Recommended Mounting Detail D follows at bottom of this page.

Recommended Mounting Hole Detail

Detail A*

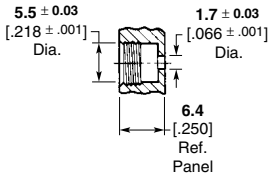

Detail B* (6.35 [.250] Panel Thickness)

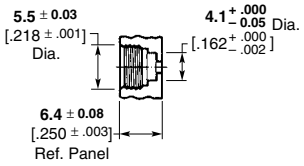

Detail C*

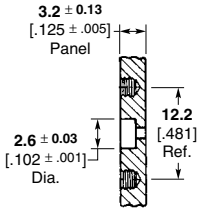

Detail D*

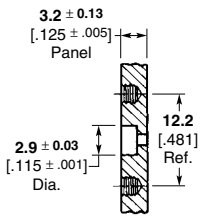

Detail E*

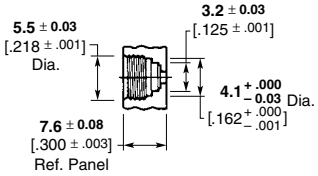

*Consult appropriate Instruction Sheet for complete mounting details.

Note: Part Numbers are RoHS compliant except: ♦ Indicates non-RoHS compliant.

Catalog 1307191
Revised 3-07

www.tycoelectronics.com

Dimensions are in millimeters and inches unless otherwise specified. Values in brackets are standard equivalents.

Dimensions are shown for reference purposes only. Specifications subject to change.

USA: 1-800-522-6752
Canada: 1-905-470-4425
Mexico: 01-800-733-8926
C. America: 52-55-1106-0803

South America: 55-11-2103-6000
Hong Kong: 852-2735-1628
Japan: 81-44-844-8013
UK: 44-8706-080-208

OSSP Subminiature Modular Blind Mate Connectors

Product Facts

- **Subminiature version of OSP Blind Mate Connectors**
- **For space savings**
- **Family of connectors and adapters**



OSSP connectors are a subminiature version of the OSP blind mate series. Connectors in this series incorporate the design elements of the OSP interface including the float and mismate features. OSSP blind mates are about 40% smaller than OSP connectors and are designed to be used in applications where space is at a premium.

A complete family of OSSP connectors and adapters is available including cable connectors, fixed and float mount panel connectors and hermetic connectors. Rigid mount units will function to specifications up to ±.064 [±.0025] radial misalignment with the mating plug connector. Applications requiring greater than ±.064 [±.0025] radial misalignment can use either the float design or floating connector plates with guide pins.

Engineering Data

Impedance —	50 ohms
Frequency —	dc to 28.0 GHz
Temperature Rating —	-65° to 125° C

Electrical

	RG 405 (.085) Semi-Rigid
VSWR —	1.05 + .01f (GHz)
RF Transmission Loss —	.040 x $\sqrt{f}$ (GHz)
Insulation Resistance —	5,000 megohms min.
Contact Resistance —	
Center Contact	6.0 milliohms max.
Outer Contact	3.0 milliohms max.
Outer Contact to Cable	0.5 milliohms max.
Dielectric Withstanding Voltage —	675 volts RMS
Corona Extinction Voltage at 70,000 Ft.—	250 volts min.
RF High Potential at 5 MHz —	675 volts RMS
RF Leakage Interface Only —	-(90-fGHz) dB min. (fully mated)
Power Handling —	300W at 3 GHz (sea level) and room temperature

Environmental

Corrosion —	Method 101, Condition B, MIL-STD-202
Vibration —	Method 204, Condition D, 20G's, MIL-STD-202
Shock —	Method 213, Condition I, 100G's, MIL-STD-202
Temperature Cycling —	Method 107, Condition B, MIL-STD-202
Moisture Resistance —	Method 106, MIL-STD-202

Material

Housing —	Corrosion resistant steel Type 303 (stainless) per ASTM A484 and A582
Center Contact —	Beryllium copper per ASTM-B-196
Dielectric —	TFE fluorocarbon per ASTM-D-1457
Gasket (O'Ring) —	MIL-P-25732

Mechanical

Force to Engage —	3 pounds max.
Force to Disengage —	1.5 pounds max.
Center Contact Retention —	4 pounds min.
Durablilty —	1,000 Cycles
Radial Misalignment —	
Rigid Mount	±.06 [±.0025]
Float Mount	±.51 [±.020]

Mating Characteristics

Jack Connector —		
Center Contact Socket	Oversize test Pin —	.533 + .003 [.0210 + .0001] dia.
	Test Pin Finish —	16 micro inch max.
	Insertion Depth —	.76/1.14 [.030/.045]
	Number of Insertions —	3
Insertion Force	Test Pin —	.528 + .003 [.0208 + .0001] dia.
	Test Pin Finish —	16 micro inch
	Insertion Force —	3 pounds max.
Withdrawal Force	Test Pin —	.495 + .003 [.0195 - .0001] dia.
	Test Pin Finish —	16 micro inch max.
	Insertion Depth —	1.27/1.91 [.050/.075]
	Withdrawal —	1/2 ounce min.

Finish

Center Contact —	Gold plate per MIL-G-45204, Type II, Class 0 over nickel plate per QQ-N-290, Class 2 or passivate per ASTM-A380
Housing —	Gold plate per MIL-G-45204, Type II, Class 0 over nickel plate per QQ-N-290, Class 2 or passivate per ASTM-A380

Catalog 1307191
Revised 3-07

www.tycoelectronics.com

Dimensions are in millimeters and inches unless otherwise specified. Values in brackets are standard equivalents.

Dimensions are shown for reference purposes only. Specifications subject to change.

USA: 1-800-522-6752
Canada: 1-905-470-4425
Mexico: 01-800-733-8926
C. America: 52-55-1106-0803

South America: 55-11-2103-6000
Hong Kong: 852-2735-1628
Japan: 81-44-844-8013
UK: 44-8706-080-208

OSSP Subminiature Modular Blind Mate Connectors (Continued)

Interface Mating Dimensions

The connector interface, specifically designed for multiple interconnects, maintains reliable performance over the typical mechanical tolerance required in cost effective packaging.

The interface test data shows excellent performance is maintained with mating gaps up to .015 inch.

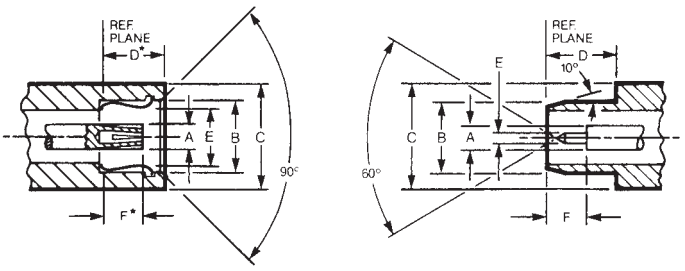

Jack Plug

Description	Dimensions					
	A	B	C	D	E	F
Jack	**1.22** 0.48 Nom.	**3.91** .154 Min.	**5.33** .210 Ref.	**5.00** .197 Nom.*	**3.35** .132 Max.	**3.23** .127 Max.*
Plug	**1.22** 0.48 Nom.	**3.56** .140 Nom.	**5.33** .210 Ref.	**5.00** .199 Min.	**0.51** .020 Nom.	**3.25** .128 Min.

*With spring bottomed.

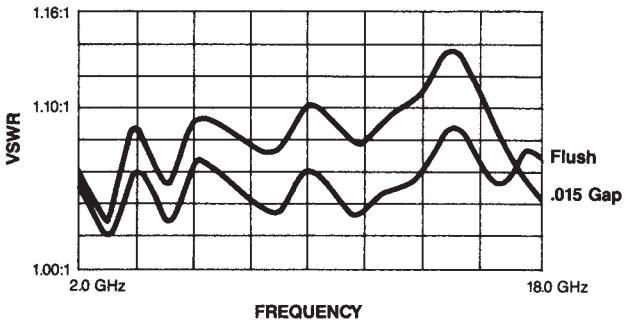

Catalog 1307191
Revised 3-07

www.tycoelectronics.com

Dimensions are in millimeters and inches unless otherwise specified. Values in brackets are standard equivalents.

Dimensions are shown for reference purposes only. Specifications subject to change.

USA: 1-800-522-6752
Canada: 1-905-470-4425
Mexico: 01-800-733-8926
C. America: 52-55-1106-0803

South America: 55-11-2103-6000
Hong Kong: 852-2735-1628
Japan: 81-44-844-8013
UK: 44-8706-080-208

OSSP Subminiature Modular Blind Mate Connectors (Continued)
For Semi-Rigid Cable, Direct Solder Attachment

Bulkhead Feedthrough Cable Plug — Rear Mount



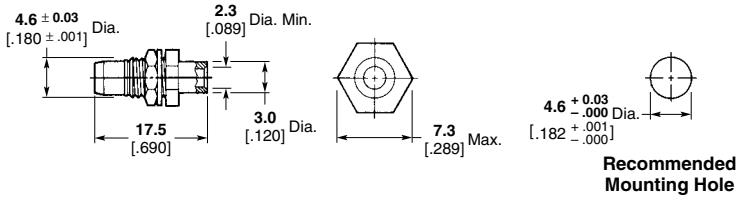

Cable	Plating	Part No.
RG 405/U, **2.16** [.085]	Gold	**1059857-1**

Flange Mount Cable Jack — Floating Rear Mount



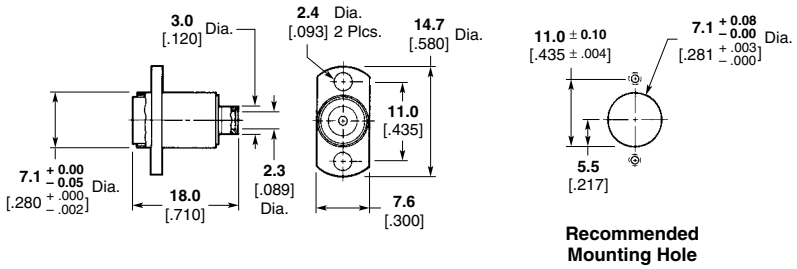

Cable	Part No.
RG 405/U, **2.16** [.085]	**1059868-1**

Finish: Inner housing that is soldered to cable is gold plated. Outer housing is passivated stainless steel.
When using semi-rigid cable, it is recommended that a service loop be used to facilitate the float features of the connector.

Feedthrough Snap-In



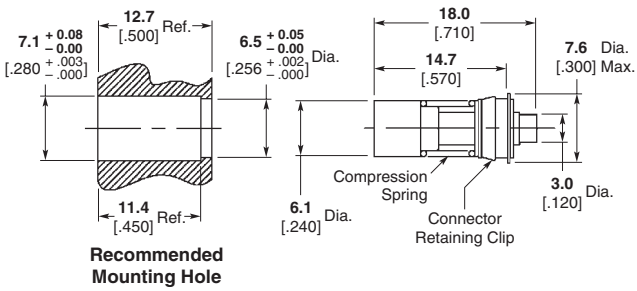

Cable	Part No.
RG 405/U, **2.16** [.085]	**1059874-1**

Note: Part Numbers are RoHS compliant except: ♦ Indicates non-RoHS compliant.

Catalog 1307191
Revised 3-07

www.tycoelectronics.com

Dimensions are in millimeters and inches unless otherwise specified. Values in brackets are standard equivalents.

Dimensions are shown for reference purposes only. Specifications subject to change.

USA: 1-800-522-6752
Canada: 1-905-470-4425
Mexico: 01-800-733-8926
C. America: 52-55-1106-0803

South America: 55-11-2103-6000
Hong Kong: 852-2735-1628
Japan: 81-44-844-8013
UK: 44-8706-080-208

OSSP Subminiature Modular Blind Mate Connectors (Continued)
For Flexible Cable, Crimp Attachment

Bulkhead Feedthrough Cable Plug — Rear Mount



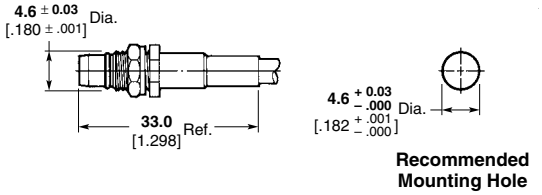

Cable	Plating	Part No.
RG 188/U, 316 Double Braided Only	Passivated Stainless Steel	**1059884-1**
RG 174/U, 188/U, 316U	Passivated Stainless Steel	**1059886-1**

Flange Mount Cable Jack — Floating Rear Mount



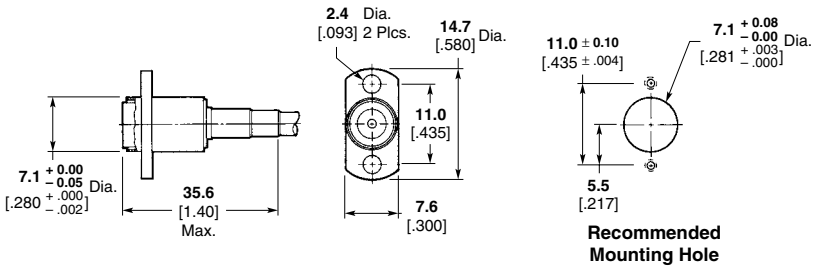

Cable	Plating	Part No.
RG 188/U, 316 Double Braided Only	Passivated Stainless Steel	**1059888-1**
RG 174/U, 188/U, 316U	Passivated Stainless Steel	**1059887-1**

Feedthrough Snap-In Cable Jack



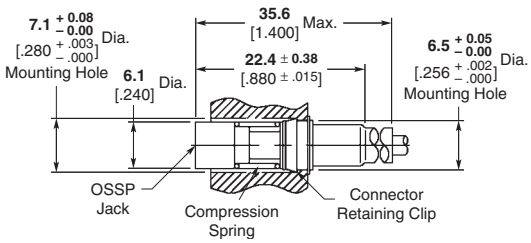

Part No.
1059889-1

Note: Part Numbers are RoHS compliant except: ♦ Indicates non-RoHS compliant.

Catalog 1307191
Revised 3-07

www.tycoelectronics.com

Dimensions are in millimeters and inches unless otherwise specified. Values in brackets are standard equivalents.

Dimensions are shown for reference purposes only. Specifications subject to change.

USA: 1-800-522-6752
Canada: 1-905-470-4425
Mexico: 01-800-733-8926
C. America: 52-55-1106-0803

South America: 55-11-2103-6000
Hong Kong: 852-2735-1628
Japan: 81-44-844-8013
UK: 44-8706-080-208

OSSP Subminiature Modular Blind Mate Connectors (Continued)
For Panel Mount

Threaded Panel Feedthrough Plug Receptacle, Straight Terminal



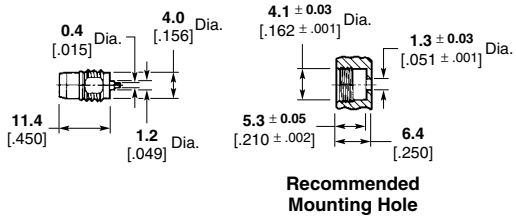

Plating	Part No.
Passivated Stainless Steel	1059903-1

Press-Fit Panel Feedthrough Plug Receptacle



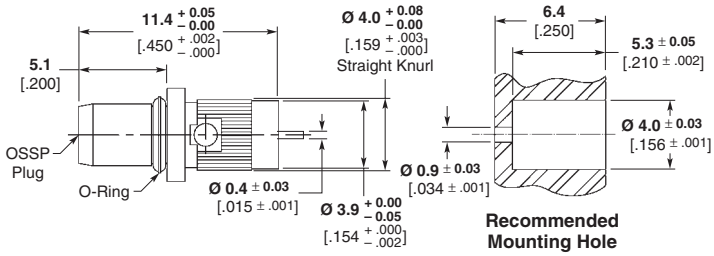

Part No.
1059901-1

Note: Part Numbers are RoHS compliant except: ♦ Indicates non-RoHS compliant.

Catalog 1307191
Revised 3-07

www.tycoelectronics.com

Dimensions are in millimeters and inches unless otherwise specified. Values in brackets are standard equivalents.

Dimensions are shown for reference purposes only. Specifications subject to change.

USA: 1-800-522-6752
Canada: 1-905-470-4425
Mexico: 01-800-733-8926
C. America: 52-55-1106-0803

South America: 55-11-2103-6000
Hong Kong: 852-2735-1628
Japan: 81-44-844-8013
UK: 44-8706-080-208

OSSP Subminiature Modular Blind Mate Connectors (Continued)
For Printed Circuit Board Mount

Straight Plug Receptacle — Captured Contact



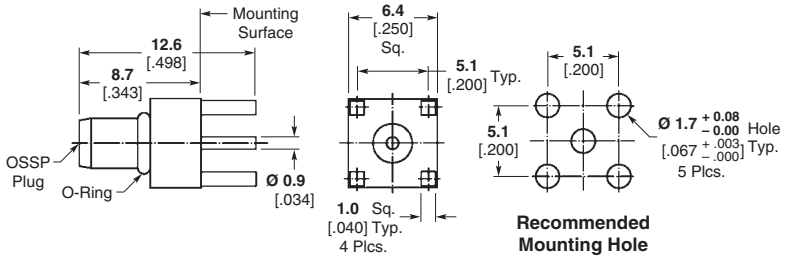

Part No.
1059919-1

Right-Angle Plug Receptacle



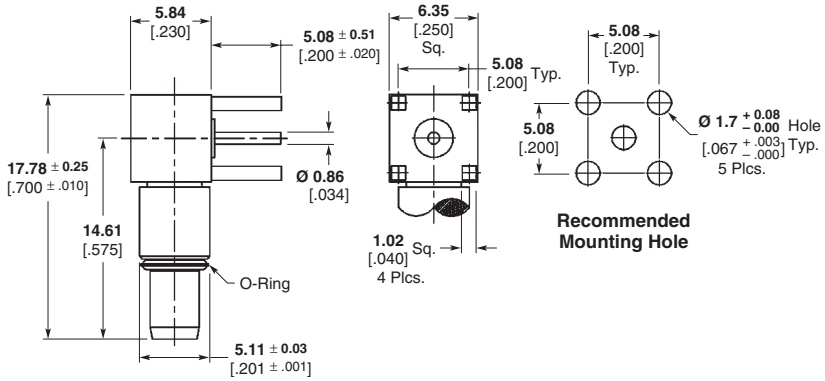

Part Number
1484546-1

Note: Part Numbers are RoHS compliant except: ♦ Indicates non-RoHS compliant.

Catalog 1307191
Revised 3-07

www.tycoelectronics.com

Dimensions are in millimeters and inches unless otherwise specified. Values in brackets are standard equivalents.

Dimensions are shown for reference purposes only. Specifications subject to change.

USA: 1-800-522-6752
Canada: 1-905-470-4425
Mexico: 01-800-733-8926
C. America: 52-55-1106-0803

South America: 55-11-2103-6000
Hong Kong: 852-2735-1628
Japan: 81-44-844-8013
UK: 44-8706-080-208

OSSP Subminiature Modular Blind Mate Connectors (Continued)
Hermetically Sealed

Metal to Metal

Formable Gasket — Panel Feedthrough Plug Receptacle



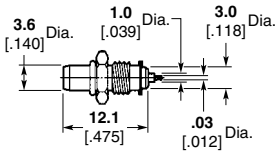

VSWR (GHz)	RF Leakage (dB)	Plating	Part No.
1.06 + .01f	–(85-fGHz)	Gold	**1059905-1**

Recommended Mounting Hole Detail A at bottom of this page.

Solder and Braze-In

Panel Feedthrough Plug Receptacle



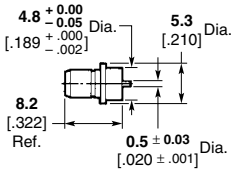

VSWR (GHz)	RF Leakage (dB)	Plating	Part No.
1.06 + .01f	–(85-fGHz)	Gold	**1059902-1**

Recommended Mounting Hole Detail B at bottom of this page.

Field Replaceable Solder and Braze-In

2-Hole Flange Mount Plug Receptacle With EMI/RFI Gasket



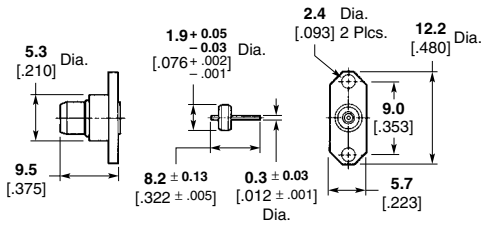

VSWR (GHz)	RF Leakage (dB)	Plating	Part No.
1.06 + .01f	–(85-fGHz)	Passivated Stainless Steel	**1059894-1**

Recommended Mounting Hole Detail C at bottom of this page.

Recommended Mounting Hole Detail for Hermetically Sealed

Detail A*

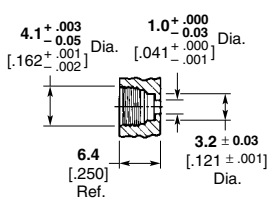

Detail B*

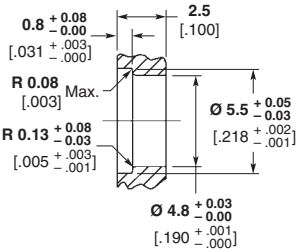

Detail C*

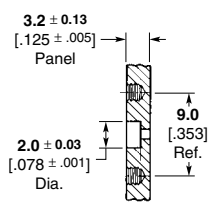

*Consult appropriate Instruction Sheet for complete mounting procedure.

Note: Part Numbers are RoHS compliant except: ♦ Indicates non-RoHS compliant.

Catalog 1307191
Revised 3-07

www.tycoelectronics.com

Dimensions are in millimeters and inches unless otherwise specified. Values in brackets are standard equivalents.

Dimensions are shown for reference purposes only. Specifications subject to change.

USA: 1-800-522-6752
Canada: 1-905-470-4425
Mexico: 01-800-733-8926
C. America: 52-55-1106-0803

South America: 55-11-2103-6000
Hong Kong: 852-2735-1628
Japan: 81-44-844-8013
UK: 44-8706-080-208

SMB Connectors

Product Facts

- **SMB offers snap-fit coupling for quick connect/disconnect**
- **Choice of Commercial or High Rel Connectors**
- **50 and 75 Ω MIL-Type connectors available**
- **Straight plugs and jacks are completely crimp terminated**
- **Fast easy cable assembly**
- **Low VSWR**
- **Standard military, commercial or Tyco Electronics tooling**
- **Listed under the Component Program of Underwriters Laboratories Inc., File No. E81956**
- **PC Board soldered connectors are recognized under the Component Program of Underwriters Laboratories Inc., File No. E81956**
- **Certified by Canadian Standards Association File No. LR 7189**

SMB Connectors are available in commercial and high rel versions. They are ideally suited for circuit miniaturization and are offered in a wide range of configurations including plugs, right-angle plugs, jacks, bulkhead jacks and adapters, as well as printed circuit board and solder jacks.

Termination costs are kept to a minimum using plugs and jacks with a crimp center contact and hex crimp outer braid. Both hand held tooling and pneumatic bench-mounted tooling is available. Easily assembled right-angle plugs have a hex crimp on the outer braid ferrule and bifurcated solder center contacts.

Tyco Electronics' 75 Ohm BT 43 SMB Connectors feature unique spring mating with snap-fit couplings for quick connect/disconnect. These connectors are designed to be intermateable with 75 Ohm SMB MIL-C-39012 connectors. They also feature reliable dual crimp cable terminations.



Packaging—All connectors are packaged individually unless otherwise noted under the "Military No. and/or Comments" column in the connector specifications chart.

Between Series Adapters

For SMB Between Series Adapters, please see pages 251-260.

Catalog 1307191
Revised 3-07

www.tycoelectronics.com

Dimensions are in millimeters and inches unless otherwise specified. Values in brackets are standard equivalents.

Dimensions are shown for reference purposes only. Specifications subject to change.

USA: 1-800-522-6752
Canada: 1-905-470-4425
Mexico: 01-800-733-8926
C. America: 52-55-1106-0803

South America: 55-11-2103-6000
Hong Kong: 852-2735-1628
Japan: 81-44-844-8013
UK: 44-8706-080-208

SMB Connector Specifications

Electrical Characteristics

Impedance — 50 ohms and 75 ohms, nominal

Frequency Range — 0 to 4.0 GHz

Voltage Rating (VRMS) —	**Sea Level**	**70,000 Feet**
50 ohm connectors for RG 178/U series cable	300	75
50 ohm connectors for RG 316/U series cable	400	100
75 ohm connectors for RG 179/U series cable	300	75
75 ohm connectors for RG 195/U series cable	500	125

Insulations Resistance — 1000 megohms min.

Contact Resistance — (milliohms max.)	**Initial**	**After Environment**
Center contact	6.0	8.0
Outer contact	1.0	1.5
Braid to body	1.0	N/A

Contact Current Rating — 1.5 amps DC max.

Voltage Standing Wave Ratio (VSWR0 — to 4.0 GHz or 80% of upper cutoff frequency of the cable, whichever is lower.

Cable	**Mating Engagement**	
	Straight	**Right-Angle**
RG 178/U Series	1.30 + .04F	1.45 + .06F
RG 316/U Series	1.25 + .04F	1.35 + .04F

F=GHz, does not apply to 75 ohm connectors.

RF High Potential Withstanding Voltage

Frequency — 5 MHZ

Leakage Current — N/A

50 ohm connectors for RG 178/U series cable	675 VRMS
50 ohm connectors for RG 316/U series cable	950 VRMS
75 ohm connectors for RG 179/U series cable	950 VRMS
75 ohm connectors for RG 195/U series cable	1225 VRMS

RF Leakage — –55 dB min. at 2-3 GHz

Insertion Loss — .30dB max. at 3 GHz

Mechanical Characteristics

Engagement Forces — 14 lbs. [62.3 N] maximum engagement initially. After 500 matings, 14 lbs. [62.3 N] maximum engagement and 2 lbs. [8.8 N] minimum disengagement for all of SMBs.

Cable Attachment —

Straight Connectors — Crimp, both center contact and braid

Right-Angle Connectors — Crimp on braid and bifurcated solder center contact

Durability — 500 cycles per MIL-C-39012

Contact Captivation — When captivated, the contacts will withstand 4.0 lbs. minimum axial force.

Cable Retention — When properly assembled to the compatible braided coaxial cable, the retention is equal to the breaking strength of the cable.

Marking — Per MIL-STD-130

Environmental Characteristics

Temperature Rating — –65°C to +165°C

Corrosion (salt spray) — MIL-STD-202, Method 101, test condition B, 5% salt solution

Vibration High Frequency — MIL-STD-202, Method 204, test condition B (15 G's)

Shock — MIL-STD-202, Method 213, test condition B, 75 G's at 6 milliseconds, ½ sine

Thermal Shock — MIL-STD-202, Method 107, test condition B, except high temperature shall be +85°C. High temperature shall be +200°C for connectors using 200°C cables.

Moisture Resistance — MIL-STD-202, Method 106, when interface gasket is used. No measurements of high humidity. Insulation resistance shall be 200 megohms minimum within five minutes after removal from humidity.

Durability Test — Conducted per MIL-C-39012 Reg. Para. 3.15, Method Para. 4.6.12

Materials

Body, Body Components and Male Contacts — Brass, half hard, per QQ-B-626, Alloy 360, Zinc per QQ-Z-363

Female Contacts — Beryllium copper per QQ-C-530, heat treated per MIL-H-7199

Insulators — TFE fluorocarbon per ASTM D 1710, Type 1, Grade 1

Lockwashers — Phosphor bronze per QQ-B-750

Crimp Ferrule — Annealed copper alloy per WW-T-799

Gaskets — Silicone rubber per ZZ-R-765, Class 11B, Grade 65-75

Plating

Center Contacts — 0.00127 [.000050] min. Gold per MIL-G-452048 Type 1, Grade C, Class 1, over 0.00254 [.000100] min. nickel per QQ-N-290

Other Metal Parts — Gold, Nickel or Solder plated to meet the Finish and Corrosion requirements of MIL-C-39012

Catalog 1307191
Revised 3-07

www.tycoelectronics.com

Dimensions are in millimeters and inches unless otherwise specified. Values in brackets are standard equivalents.

Dimensions are shown for reference purposes only. Specifications subject to change.

USA: 1-800-522-6752
Canada: 1-905-470-4425
Mexico: 01-800-733-8926
C. America: 52-55-1106-0803

South America: 55-11-2103-6000
Hong Kong: 852-2735-1628
Japan: 81-44-844-8013
UK: 44-8706-080-208

SMB Connectors, 50 Ohm

Straight Plugs

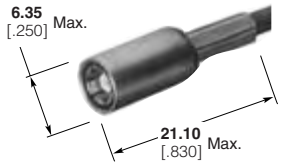

RG/U Cable	Center Contact Plating	Outer Contact Plating	Other Metal Parts Plating	Dielectric	Style	Part No.
178, 178A, 178B, 196, 196A	Gold	Gold	Nickel	PTFE	MIL Type	**413985-6**
174, 316, 188, 188A	Gold	Gold	Gold	PTFE	MIL Type	**413985-1**
	Gold	Gold	Nickel	PTFE	MIL Type	**413985-3**
	Gold	Nickel	Nickel	PTFE	MIL Type	**413985-7**
	Gold	Gold	Nickel	PTFE	Die Cast	**414946-1**
	Gold	Nickel	Nickel	PTFE	Die Cast	**5414946-2**
179, 179A, 179B, 161, 187, 187A, BELDEN 9221	Gold	Gold	Nickel	PTFE	MIL Type	**1-413985-1**
	Gold	Gold	Nickel	PTFE	Die Cast	**5414946-5**
	Gold	Nickel	Nickel	PTFE	Die Cast	**5414946-6**
RG 316, 188 Double Braid	Gold	Gold	Gold	PTFE	MIL Type	**413985-2**
	Gold	Gold	Nickel	PTFE	MIL Type	**413985-4**
	Gold	Gold	Nickel	PTFE	Die Cast	**5414946-3**
	Gold	Nickel	Nickel	PTFE	MIL Type	**413985-8**

Right-Angle Plugs

MIL Type

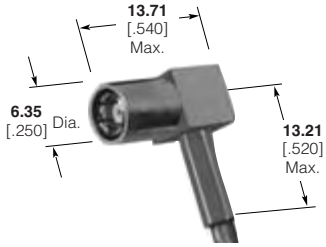

Die Cast

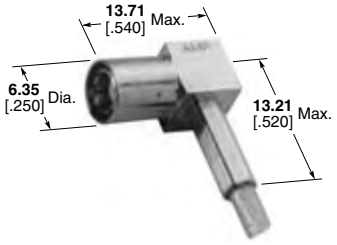

RG/U Cable	Center Contact Plating	Outer Contact Plating	Other Metal Parts Plating	Dielectric	Style	Part No.
178, 178A, 178B, 196, 196A	Gold	Gold	Gold	PTFE	MIL Type	**414002-7**
	Gold	Gold	Nickel	PTFE	MIL Type	**414002-8**
	Gold	Gold	Nickel	PTFE	Die Cast	**5414363-8**
174, 316, 188, 188A 179, 179A, 179B 161, 187, 187A BELDEN 9221	Gold	Gold	Gold	PTFE	MIL Type	**414002-1**
	Gold	Gold	Nickel	PTFE	MIL Type	**414002-3**
	Gold	Nickel	Nickel	PTFE	MIL Type	**414002-5**
	Gold	Gold	Nickel	PTFE	Die Cast	**5414363-3**
	Gold	Nickel	Nickel	PTFE	Die Cast	**5414363-5**
RG 316, 188 Double Braid	Gold	Gold	Gold	PTFE	MIL Type	**414002-2**
	Gold	Gold	Nickel	PTFE	MIL Type	**414002-4**
	Gold	Gold	Nickel	PTFE	Die Cast	**5414363-4**

BELDEN is a trademark of Belden Wire and Cable Company.

Note: Part Numbers are RoHS compliant except: ♦ Indicates non-RoHS compliant.

Catalog 1307191
Revised 3-07

www.tycoelectronics.com

Dimensions are in millimeters and inches unless otherwise specified. Values in brackets are standard equivalents.

Dimensions are shown for reference purposes only. Specifications subject to change.

USA: 1-800-522-6752
Canada: 1-905-470-4425
Mexico: 01-800-733-8926
C. America: 52-55-1106-0803

South America: 55-11-2103-6000
Hong Kong: 852-2735-1628
Japan: 81-44-844-8013
UK: 44-8706-080-208

SMB Connectors, 50 Ohm (Continued)

Straight Jacks

Commercial Jack

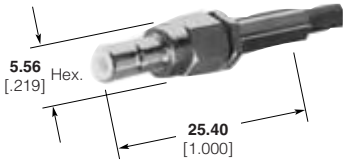

MIL Type Jack



Die Cast



Brass

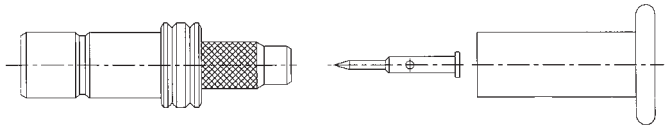

RG/U Cable	Center Contact Plating	Body Plating	Dielectric	Style	Jack Part No.
178, 178A, 178B, 196, 196A	Gold	Nickel	PTFE	MIL Type	**5414170-2**
174, 316, 188, 188A	Gold	Nickel	PTFE	MIL Type	**5414170-1**
	Gold	Nickel	PTFE	Die Cast	**414948-1**
RD 316, 188 Double Braid	Gold	Nickel	PTFE	Commercial	**414948-3**

Bulkhead Jacks

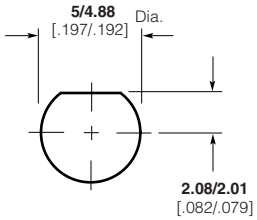

Maximum Panel Thickness **2.36** [.093]
Recommended Panel Cutout for Bulkhead Jack and Adapter

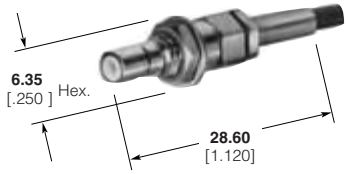

RG/U Cable	Center Contact Plating	Body Plating	Dielectric	Style	Bulkhead Jack. Part No.
174, 316, 188,188A	Gold	Nickel	PTFE	Commercial	**5415006-1**
	Gold	Nickel	PTFE	Commercial	**5228217-1**
RD 316, 188 Double Braid	Gold	Nickel	PTFE	Commercial	**5415006-2**

Bulkhead Jack Adapter
(Jack-Jack)

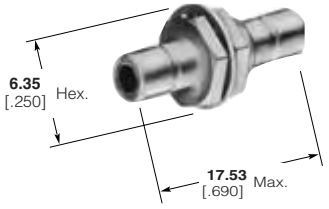

Type	Center Contact Plating	Body Plating	Dielectric	Style	Part No.
Jack-To-Jack	Gold	Nickel	PTFE	MIL Type	**228553-1**
	Gold	Gold	PTFE	MIL Type	**228553-2**

Note: Part Numbers are RoHS compliant except: ♦ Indicates non-RoHS compliant.

Catalog 1307191
Revised 3-07

www.tycoelectronics.com

Dimensions are in millimeters and inches unless otherwise specified. Values in brackets are standard equivalents.

Dimensions are shown for reference purposes only. Specifications subject to change.

USA: 1-800-522-6752
Canada: 1-905-470-4425
Mexico: 01-800-733-8926
C. America: 52-55-1106-0803

South America: 55-11-2103-6000
Hong Kong: 852-2735-1628
Japan: 81-44-844-8013
UK: 44-8706-080-208

SMB Connectors, 50 Ohm (Continued)

PC Board Vertical Jacks

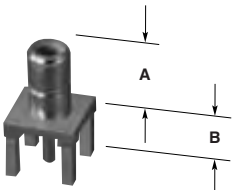

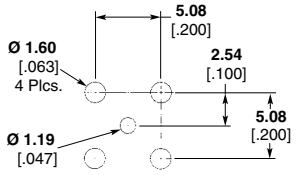

Recommended PC Board Layout

Jacks

Type	Center Contact Plating	Body Plating	Dim. A	Dim. B	Dielectric	Style	Part No.
—	Gold	Gold	**7.62** .300	**3.94** .155	PTFE	MIL Type	**413990-1**
—	Gold	Nickel	**7.62** .300	**3.94** .155	PTFE	MIL Type	**413990-2**
—	Gold	Nickel	**10.16** .400	**2.54** .100	PTFE	MIL Type	**414612-2**
—	Gold	Tin	**3.94** .155	**8.25** .325 Max.	PTFE	Brass, Stamped	**5221111-1**

PC Board Vertical Plugs

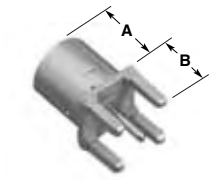

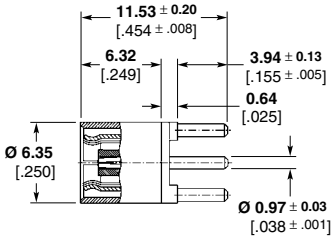

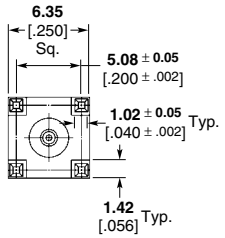

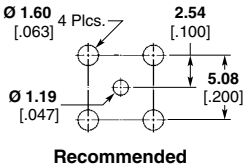

Recommended PC Board Layout

Plugs

Type	Center Contact Plating	Body Plating	Dim. A	Dim. B	Dielectric	Recommended PC Board Layout	Style	Part No.
Low Profile (Plug) Mated Pair	Gold	Nickel	**3.94** .155	**7.62** 300	PTFE	B	MIL Type	**415774-1**

Note: Part Numbers are RoHS compliant except: ♦ Indicates non-RoHS compliant.

Catalog 1307191
Revised 3-07

www.tycoelectronics.com

Dimensions are in millimeters and inches unless otherwise specified. Values in brackets are standard equivalents.

Dimensions are shown for reference purposes only. Specifications subject to change.

USA: 1-800-522-6752
Canada: 1-905-470-4425
Mexico: 01-800-733-8926
C. America: 52-55-1106-0803

South America: 55-11-2103-6000
Hong Kong: 852-2735-1628
Japan: 81-44-844-8013
UK: 44-8706-080-208

SMB Connectors, 50 Ohm (Continued)

PC Board, Right-Angle Jacks

Jack Low Profile

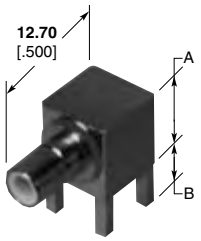

Jack with Standoff Pads

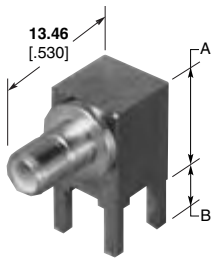

Bulkhead Jack

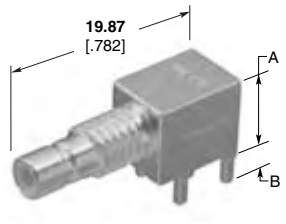

Jacks

Type	Center Contact Plating	Interface Body Plating	PCB Leg Plating	Dielectric	Dim. A	Dim. B	Style	Recommended PC Board Layout	Part No.
Low Profile	Gold	Gold	Gold	PTFE	**7.11** .280	**3.94** .155	MIL Type	A	**413996-2**
	Gold	Nickel	Nickel	PTFE	**7.11** .280	**3.94** .155	MIL Type	A	**413996-4**
	Gold	Gold	Gold	PTFE	**7.11** .280	**2.79** .110	Die Cast	A	**415340-1**
	Gold	Gold	Gold	PTFE	**8.76** .345	**2.79** .110	Die Cast	A	**415672-1**
With Standoff Pads	Gold	Gold	Gold	PTFE	**8.51** .335	**3.94** .155	MIL Type	A	**414026-2**
	Gold	Nickel	Nickel	PTFE	**8.76** .345	**3.94** .155	MIL Type	A	**414026-3**
	Gold	Nickel	Tin-Lead	PTFE	**8.76** .345	**3.94** .155	Die Cast	A	**5414337-1**
	Gold	Nickel	Nickel	PTFE	**8.76** .345	**2.79** .110	Die Cast	B	**5415379-1***
	Gold	Nickel	Nickel	PTFE	**8.51** .335	**3.94** .155	Die Cast	A	**415381-1 ♦**
Bulkhead	Gold	Gold	Gold	PTFE	**7.67** .302	**2.79** .110	Die Cast	A	**414963-1**
Commercial	Gold	Nickel	Tin	Polypropylene	**9.78** .385	**3.94** .155	Brass, Stamped	C	**5228435-1**
Bulkhead	Gold	Gold	Gold	PTFE	**7.67** .302	**2.79** .110	Die Cast	A	**1274330-1**

* 5 leg design

PC Board, Right-Angle Plug

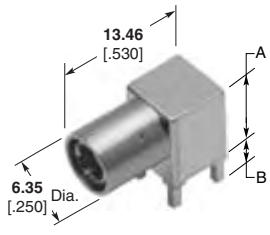

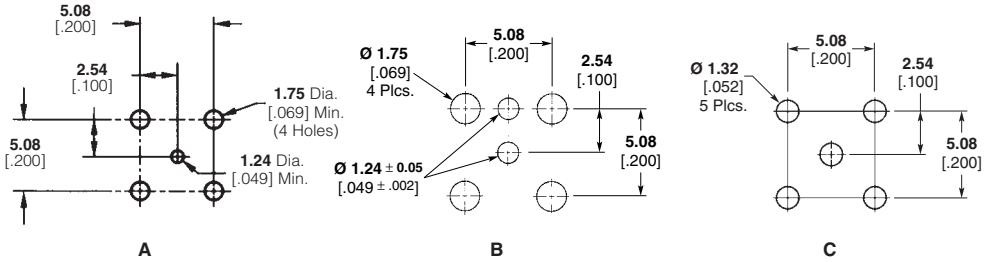

Recommended PC Board Layouts

Plugs

Center Contact Plating	Interface Body Plating	PCB Leg Plating	Dielectric	Dim. A	Dim. B	Style	Recommended PC Board Layout	Part No.
Gold	Nickel	Nickel	PTFE	**8.76** .345	**2.79** .110	Die Cast	B	**415380-1***
Gold	Nickel	Tin	PTFE	**8.76** .345	**3.94** .155	Die Cast	A	**5414338-1**

* 5 leg design

Note: Part Numbers are RoHS compliant except: ♦ Indicates non-RoHS compliant.

Catalog 1307191
Revised 3-07

www.tycoelectronics.com

Dimensions are in millimeters and inches unless otherwise specified. Values in brackets are standard equivalents.

Dimensions are shown for reference purposes only. Specifications subject to change.

USA: 1-800-522-6752
Canada: 1-905-470-4425
Mexico: 01-800-733-8926
C. America: 52-55-1106-0803

South America: 55-11-2103-6000
Hong Kong: 852-2735-1628
Japan: 81-44-844-8013
UK: 44-8706-080-208

SMB Connectors, 50 Ohm (Continued)

Bulkhead PC Board Jack, Solder Receptacle Kits



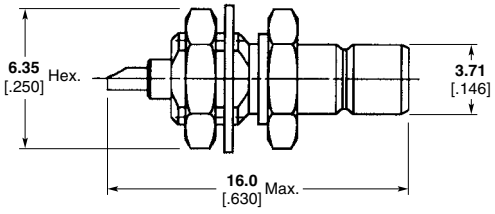

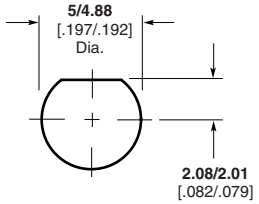

Maximum Panel Thickness **2.36** [.093]
Recommended Panel Cutout

Kit Includes Lockwasher and Jam Nut

Type	Center Contact Plating	Body Plating	Dielectric	Style	Kit Part No.
Front Mount	Gold	Nickel	PTFE	MIL Type	**228216-1***
Rear Mount	Gold	Nickel	PTFE	MIL Type	**228215-1***

*includes Jam Nut and Lockwasher

Lockwasher and Jam Nut



Part No.
415001-2



Part No.
414969-2

SMB Receptacle Jack

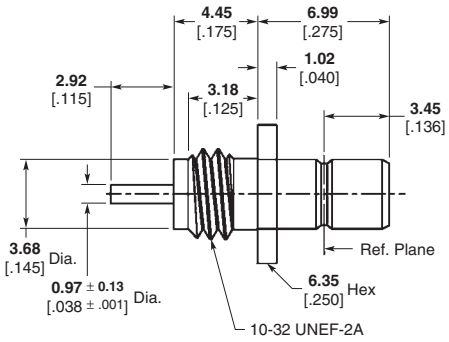

Type	Center Contact Plating	Body Plating	Dielectric	Style	Part No.
Front Mount	Gold	Nickel	PTFE	MIL Type	**414895-1**

Note: Part Numbers are RoHS compliant except: ♦ Indicates non-RoHS compliant.

Catalog 1307191
Revised 3-07

www.tycoelectronics.com

Dimensions are in millimeters and inches unless otherwise specified. Values in brackets are standard equivalents.

Dimensions are shown for reference purposes only. Specifications subject to change.

USA: 1-800-522-6752
Canada: 1-905-470-4425
Mexico: 01-800-733-8926
C. America: 52-55-1106-0803

South America: 55-11-2103-6000
Hong Kong: 852-2735-1628
Japan: 81-44-844-8013
UK: 44-8706-080-208

SMB Connectors, Mini 75 Ohm

Product Facts

- **Industry standard for miniature 75 ohm SMB**
- **SMB offers snap-fit coupling for quick connect/disconnect**
- **Suitable for high density applications**
- **Fast easy cable assembly**
- **Low VSWR**
- **Connectors offer consistent mating and unmating forces**
- **Straight plugs and jacks are completely crimp terminated**
- **Low cost**

Mini 75 ohm SMB connectors are ideally suited for circuit miniaturization in communication, broadband and switching equipment as well as a variety of other applications.

They offer the same low consistent mating/unmating force as Tyco Electronics standard SMB products and therefore, outer contact resistance values are maintained from connector to connector.

Standard military, commercial or Tyco Electronics tooling can be used to terminate these products. Cost effective assembly of the straight plugs is completed with a crimp center contact and hex crimp on the outer braid. Right-angle plugs have a hex crimp on the outer braid ferrule and bifurcated solder center contacts.



Electrical Characteristics

Impedance — 75 ohms
Frequency Range — 0 to 4.0 GHz
Insulation Resistance — 1000 megohms
Contact Current Rating — 1.5 amps DC max.

Mechanical Characteristics

Engagement Forces — Initial—14.0 lbs. [62.3 N] maximum engagement.
After 500 matings, 14.0 lbs. [62.3 N] maximum engagement.
Durability—500 cycles

Environmental Characteristics

Temperature Rating — -65°C to +165°C

Catalog 1307191
Revised 3-07

www.tycoelectronics.com

Dimensions are in millimeters and inches unless otherwise specified. Values in brackets are standard equivalents.

Dimensions are shown for reference purposes only. Specifications subject to change.

USA: 1-800-522-6752
Canada: 1-905-470-4425
Mexico: 01-800-733-8926
C. America: 52-55-1106-0803

South America: 55-11-2103-6000
Hong Kong: 852-2735-1628
Japan: 81-44-844-8013
UK: 44-8706-080-208

SMB Connectors, Mini 75 Ohm (Continued)

Straight Plug

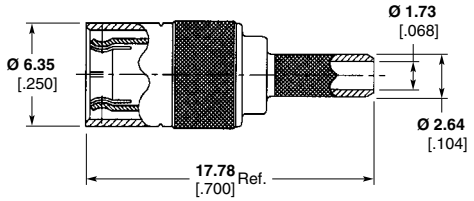

RG Cable	Center Contact Plating	Outer Contact Plating	Body Plating	Part No.
179, 187	Gold	Gold	Nickel	**5415487-1**
179, 187	Gold	Nickel	Nickel	**5415487-2**
RD 179	Gold	Nickel	Nickel	**5415487-3**

Right-Angle Plug

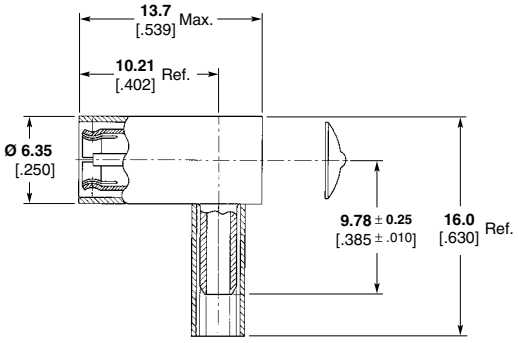

RG Cable	Center Contact Plating	Outer Contact Plating	Body Plating	Part No.
179, 187	Gold	Nickel	Nickel	**5415484-1**
179, 187	Gold	Gold	Nickel	**5415484-2**
RD 179	Gold	Gold	Nickel	**5415484-3**

Bulkhead Jack

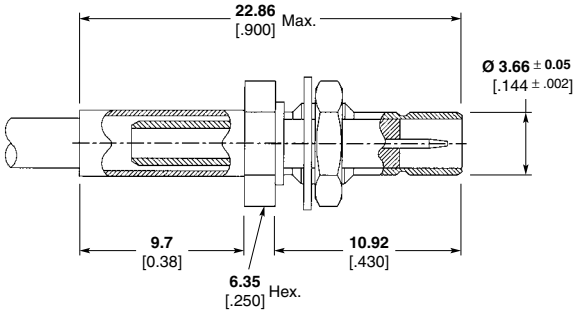

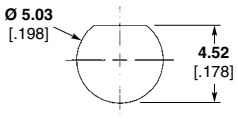

Recommended PC Board Layout

RG Cable	Center Contact Plating	Body Plating	Part No.
179, 187	Gold	Nickel	**415500-1**

Note: Part Numbers are RoHS compliant except: ♦ Indicates non-RoHS compliant.

Catalog 1307191
Revised 3-07

www.tycoelectronics.com

Dimensions are in millimeters and inches unless otherwise specified. Values in brackets are standard equivalents.

Dimensions are shown for reference purposes only. Specifications subject to change.

USA: 1-800-522-6752
Canada: 1-905-470-4425
Mexico: 01-800-733-8926
C. America: 52-55-1106-0803

South America: 55-11-2103-6000
Hong Kong: 852-2735-1628
Japan: 81-44-844-8013
UK: 44-8706-080-208

SMB Connectors, Mini 75 Ohm (Continued)

Vertical PC Board Jacks

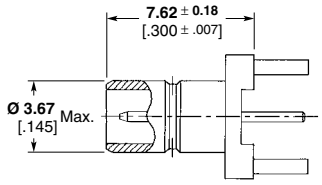

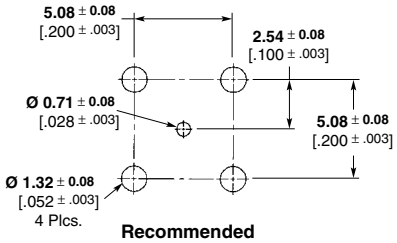

Recommended PC Board Layout

Leg Length	Center Contact Plating	Body Plating	Part No.
2.11 .083	Gold	Gold Flash	**415504-2**
3.05 .120	Gold	Gold	**415504-3**
3.05 .120	Gold	Gold Flash	**415504-4**

Right-Angle PC Board Jacks

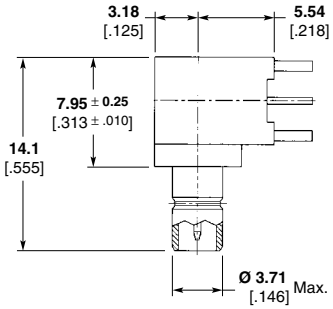

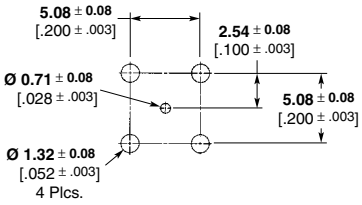

Recommended PC Board Layout

Leg Length	Center Contact Plating	Body Plating	Part No.
2.79 .110	Gold	Gold	**415490-1**
2.79 .110	Gold	Nickel	**415490-2**
2.11 .083	Gold	Gold	**415490-3**
2.11 .083	Gold	Nickel	**415490-4**

Right-Angle PC Board Bulkhead Jacks

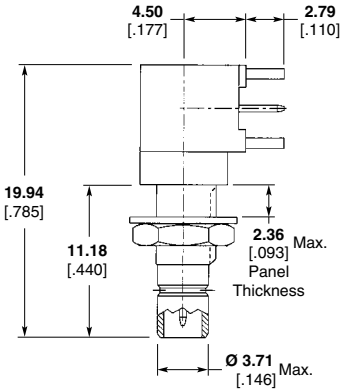

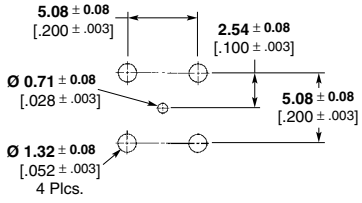

Recommended PC Board Layout

Leg Length	Center Contact Plating	Body Plating	Part No.
2.79 .110	Gold	Nickel	**415377-1**
2.79 .110	Gold	Gold	**415377-2**
2.79 .110	Gold	Gold	**415377-5***

*Isolated.

Note: Part Numbers are RoHS compliant except: ♦ Indicates non-RoHS compliant.

Catalog 1307191
Revised 3-07

www.tycoelectronics.com

Dimensions are in millimeters and inches unless otherwise specified. Values in brackets are standard equivalents.

Dimensions are shown for reference purposes only. Specifications subject to change.

USA: 1-800-522-6752
Canada: 1-905-470-4425
Mexico: 01-800-733-8926
C. America: 52-55-1106-0803

South America: 55-11-2103-6000
Hong Kong: 852-2735-1628
Japan: 81-44-844-8013
UK: 44-8706-080-208

SMB Connectors, 75 Ohm BT 43 (SMZ)

Product Facts

- **Widely used in data transmission and telecommunication applications**
- **BT 43 connector developed from the SMB range and feature snap-on and latching variant**
- **Most BT 43 connectors are available as fully crimped connectors.**
- **BT 43 and 75 Ω connectors available in solder and crimp versions**

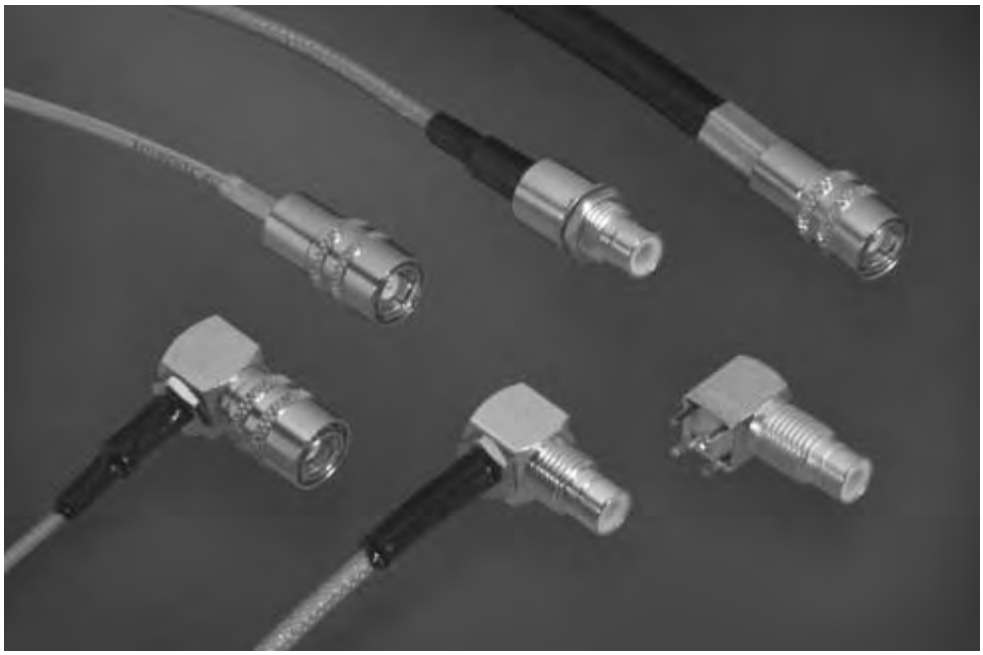

The Tyco Electronics range of 75 ohm SMB (SMZ) connectors are designed to meet the increasing demands of the Telecommunications market, and are designed in accordance with BS9210 F0022.

Specifications

Max working voltage (dc) — 500 V

Max proof voltage (dc) — 1.5 kV

Contact resistance (inner) — 5 milliohm

Contact resistance (outer) — 1 milliohm

Bodies and other parts — Brass

Female center contacts — Copper Alloy

Male center contacts — Copper Alloy

Outer contacts — BeCu

Plating —
Contacts and critical surfaces — Gold
Other parts — Nickel

Insulators — P.T.F.E.

Catalog 1307191
Revised 3-07

www.tycoelectronics.com

Dimensions are in millimeters and inches unless otherwise specified. Values in brackets are standard equivalents.

Dimensions are shown for reference purposes only. Specifications subject to change.

USA: 1-800-522-6752
Canada: 1-905-470-4425
Mexico: 01-800-733-8926
C. America: 52-55-1106-0803

South America: 55-11-2103-6000
Hong Kong: 852-2735-1628
Japan: 81-44-844-8013
UK: 44-8706-080-208

SMB Connectors, 75 Ohm BT 43 (SMZ) (Continued)

Straight Plugs, Snap-On

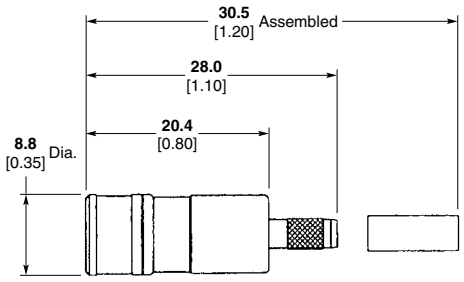

Cable Type	Termination Method		Body Plating	Part No.
	Inner	Outer		
RG 179B/U	Crimp	Crimp	Selective Gold	**1311097-1**
BT2002	Crimp	Crimp	Selective Gold	**1311098-1**

Straight Plugs, Latching, Crimp/Crimp

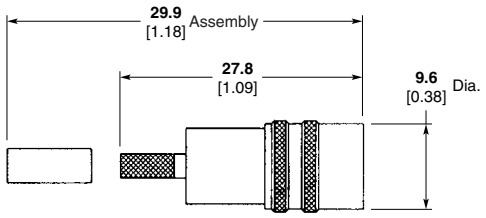

Cable Type	Body Plating	Part No
RG 179B/U	Selective Gold	**1311099-1**
BT2003	Selective Gold	**1311100-1**
BT2002	Selective Gold	**1311101-1**
BT2001	Selective Gold	**1311696-1**
BT3002, TZC75024	Selective Gold	**1311102-1**
RG 59B/U, RG 140/U, URM90	Selective Gold	**1313507-1**

Note: Part Numbers are RoHS compliant except: ♦ Indicates non-RoHS compliant.

Catalog 1307191
Revised 3-07

www.tycoelectronics.com

Dimensions are in millimeters and inches unless otherwise specified. Values in brackets are standard equivalents.

Dimensions are shown for reference purposes only. Specifications subject to change.

USA: 1-800-522-6752
Canada: 1-905-470-4425
Mexico: 01-800-733-8926
C. America: 52-55-1106-0803

South America: 55-11-2103-6000
Hong Kong: 852-2735-1628
Japan: 81-44-844-8013
UK: 44-8706-080-208

SMB Connectors, 75 Ohm BT 43 (SMZ) (Continued)

Right-Angle Socket, Snap-On, Solder/Crimp

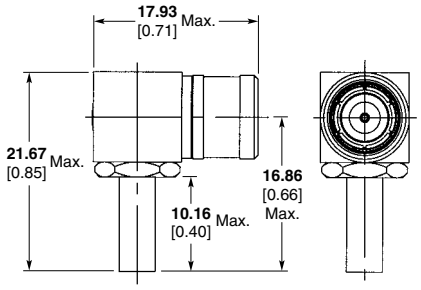

Cable Type	Body Plating	Part No
RG 179B/U	Selective Gold	**1311103-1**
BT3002, TZC75024	Selective Gold	**1311104-1**

Right-Angle Socket, Latching, Solder/Crimp

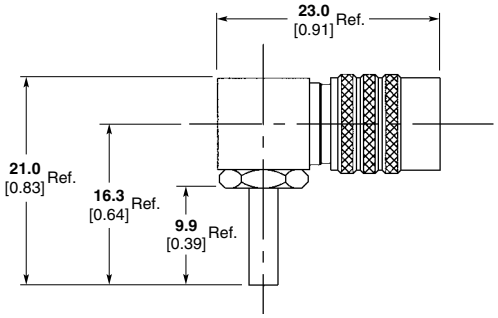

Cable Type	Body Plating	Part No
RG 179B/U	Selective Gold	**1311106-1**
BT2003	Selective Gold	**1311698-1**
BT3002, TZC75024	Selective Gold	**1311111-1**
RG 59B/U, RG 140/U	Selective Gold	**1313508-1**

Straight Free Plug, Crimp/Crimp

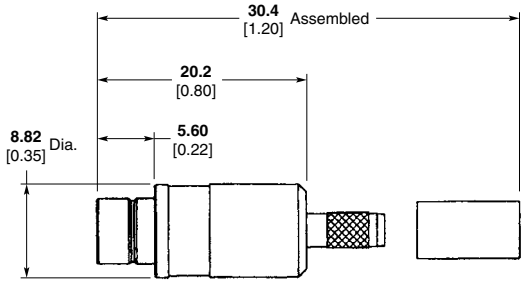

Cable Type	Body Plating	Part No
RG 179B/U	Selective Gold	**1408041-1**

Note: Part Numbers are RoHS compliant except: ♦ Indicates non-RoHS compliant.

Catalog 1307191
Revised 3-07

www.tycoelectronics.com

Dimensions are in millimeters and inches unless otherwise specified. Values in brackets are standard equivalents.

Dimensions are shown for reference purposes only. Specifications subject to change.

USA: 1-800-522-6752
Canada: 1-905-470-4425
Mexico: 01-800-733-8926
C. America: 52-55-1106-0803

South America: 55-11-2103-6000
Hong Kong: 852-2735-1628
Japan: 81-44-844-8013
UK: 44-8706-080-208

SMB Connectors, 75 Ohm BT 43 (SMZ) (Continued)

Straight Bulkhead Plug

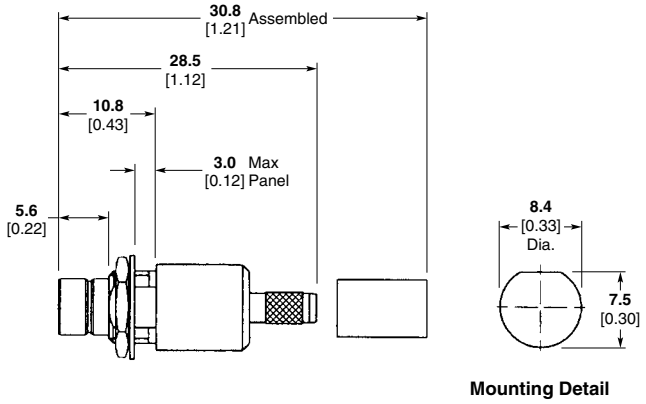

Mounting Detail

Cable Type	Termination Method		Body Plating	Part No.
	Inner	Outer		
RG 179B/U	Crimp	Crimp	Selective Gold	**1311120-1**
BT500B, BT2003, BT2003A	Crimp	Crimp	Selective Gold	**1311701-1**
BT3002, TZC75024	Crimp	Crimp	Selective Gold	**1311122-1**

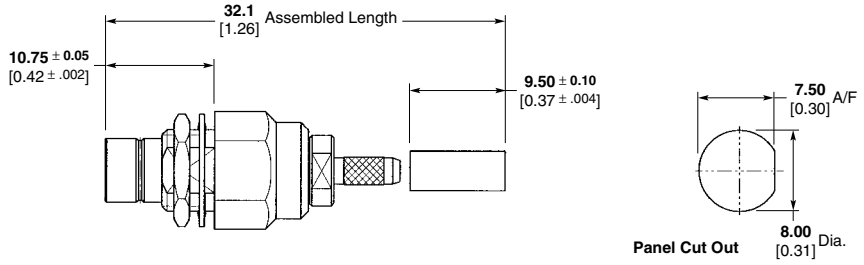

Cable Type	Termination Method		Body Plating	Part No.
	Inner	Outer		
3M: 043, 031C, CS4456, Gore: GCX	Crimp	Crimp	Selective Gold	**1313511-1**

Right-Angle Bulkhead Plug, Solder/Crimp

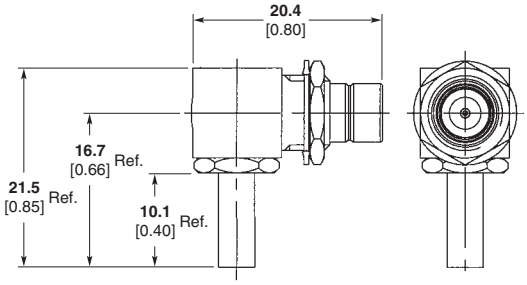

Cable Type	Body Plating	Part No
RG 179B/U	Selective Gold	**1311115-1**

Note: Part Numbers are RoHS compliant except: ♦ Indicates non-RoHS compliant.

Catalog 1307191
Revised 3-07

www.tycoelectronics.com

Dimensions are in millimeters and inches unless otherwise specified. Values in brackets are standard equivalents.

Dimensions are shown for reference purposes only. Specifications subject to change.

USA: 1-800-522-6752
Canada: 1-905-470-4425
Mexico: 01-800-733-8926
C. America: 52-55-1106-0803

South America: 55-11-2103-6000
Hong Kong: 852-2735-1628
Japan: 81-44-844-8013
UK: 44-8706-080-208

SMB Connectors, 75 Ohm BT 43 (SMZ) (Continued)

DDF Plug, Crimp/Crimp

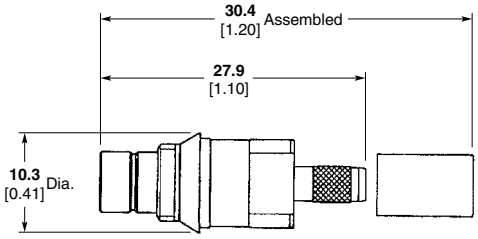

Cable Type	Body Plating	Part No
RG 179B/U	Selective Gold	**1327083-1**
BT2003	Selective Gold	**1311117-1**
BT2002	Selective Gold	**1311700-1**
B2001	Selective Gold	**1313883-1**
BT3002, TZC75024	Selective Gold	**1311118-1**
RG 59B/U, RG 140/U, URM90	Selective Gold	**1313887-1**

DDF Plug, Crimp/Crimp

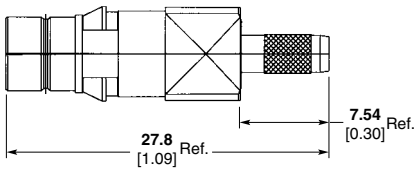

Cable Type	Body Plating	Part No
RD179, 124431 (Filotex), 1366 (Orebro), K02253D-1, K02253-2 (Shuner)	Selective Gold	**1314422-1**

PC Board Plug 43/1D

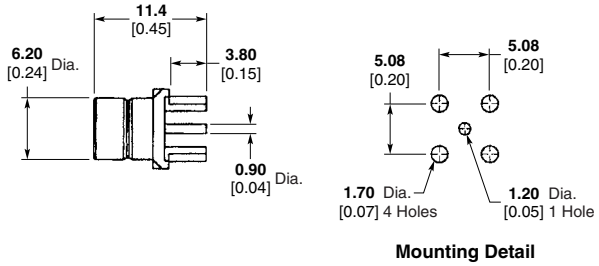

Mounting Detail

Body Plating	Part No.
Selective Gold	**1311125-1**

PC Board Plug 43/1E

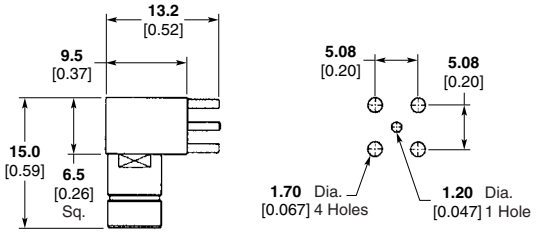

Mounting Detail

Body Plating	Part No.
Selective Gold	**1314103-1**

Right-Angle PC Board Plug

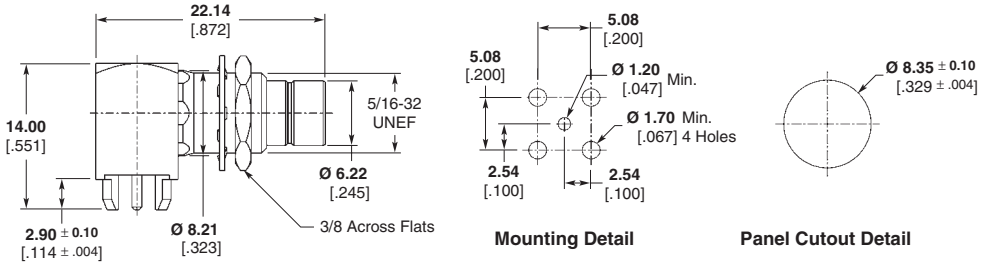

Mounting Detail **Panel Cutout Detail**

Part No. 1314102-1

Note: Part Numbers are RoHS compliant except: ♦ Indicates non-RoHS compliant.

Catalog 1307191
Revised 3-07

www.tycoelectronics.com

Dimensions are in millimeters and inches unless otherwise specified. Values in brackets are standard equivalents.

Dimensions are shown for reference purposes only. Specifications subject to change.

USA: 1-800-522-6752
Canada: 1-905-470-4425
Mexico: 01-800-733-8926
C. America: 52-55-1106-0803

South America: 55-11-2103-6000
Hong Kong: 852-2735-1628
Japan: 81-44-844-8013
UK: 44-8706-080-208

SMB Connectors, 75 Ohm BT 43 (SMZ) (Continued)

Straight Adapter Plug-Plug

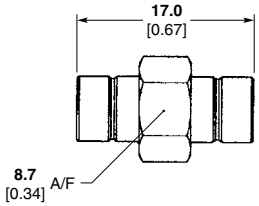

Part No. 1313364-1

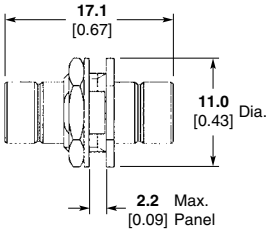

Part No. 1311127-1

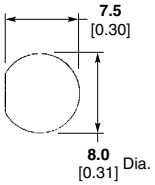

Mounting Detail

Body Plating	Part No.
Selective Gold	**1313364-1**
Selective Gold	**1311127-1**

Tester 430A

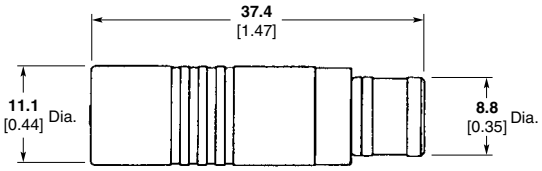

Body Plating	Part No.
Selective Plating	**6-1311703-1**

Extraction Tool 65A

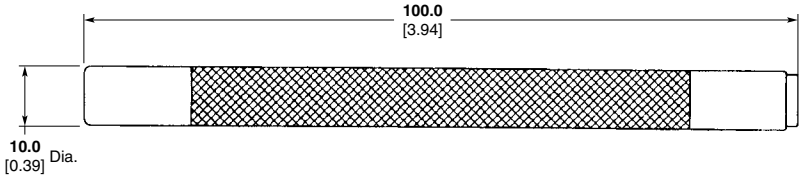

Part No.
1311164-1 ♦

Note: Part Numbers are RoHS compliant except: ♦ Indicates non-RoHS compliant.

Catalog 1307191
Revised 3-07

www.tycoelectronics.com

Dimensions are in millimeters and inches unless otherwise specified. Values in brackets are standard equivalents.

Dimensions are shown for reference purposes only. Specifications subject to change.

USA: 1-800-522-6752
Canada: 1-905-470-4425
Mexico: 01-800-733-8926
C. America: 52-55-1106-0803

South America: 55-11-2103-6000
Hong Kong: 852-2735-1628
Japan: 81-44-844-8013
UK: 44-8706-080-208

SMB Connector Crimp Tooling

50 Ω/75 Ω

RG/U Cable	Commercial Connector Tooling						MIL Type Connector Tooling						
	Center Contact Crimp Tooling			Braid Crimp Tooling			Center Contact Crimp Tooling			Braid Crimp Tooling			
	Dies for Tyco Electronics PRO-CRIMPER Hand Tool Number	MIL-C-22520/2-01 Tool DANIELS* Positioner	Position	Dies for Tyco Electronics PRO-CRIMPER Hand Tool Number	Position	MIL-C-22520/5-01 Tool DANIELS* Hex Crimp Die	DANIELS* Hand Tool	DANIELS* Positioner Number	Selector Position	Dies for Tyco Electronics PRO-CRIMPER Hand Tool Number	Position	DANIELS Hand Tool	Hex Die Across Flats
178, 178A, 178B, 196, 196A	**58489-1**	Female-K699 Male-K727	4	**58489-1**	A&B	Y624	AFM8	Female-K699 Male-K727	4	**58483-1**	A	HX4-1637	**2.67** .105
Double Braid 178, 196	—	—	—	—	—	—	AFM8	Female-K699 Male-K727	4	**58483-1**	B	HX4-1637	**3.25** .128
174, 316 188, 188A	**58489-1**	Female-K699 Male-K727	4	**58489-1**	A	Y444	AFM8	Female-K699 Male-K727	4	**58483-1**	B	HX4-1637	**3.25** .128
Double Braid 174, 316, 188	**58489-1**	Female-K699	4	**58489-1**	C	Y196 Location A	AFM8	Female-K699	4	**58483-1**	C	HX4-1637	**3.84** .151
Double Braid 174, 316, 188	**58489-1**	Male-K727	4	**58489-1**	C	Y196 Location A	AFM8	Solder	—	**58483-1**	B	HX4-1637	**3.25** .128
179, 179A 179B, 161, 187, 187A, BELDEN 9221	**58489-1**	Female-K699	4	**58489-1**	A	Y444	AFM8	Female-K699	4	**58483-1**	B	HX4-1637	**3.25** .128
179, 179A 179B, 161, 187, 187A, BELDEN 9221	**58489-1**	Male-K727	4	**58489-1**	A	Y444	—	Solder	—	**58483-1**	B	HX4-1637	**3.25** .128
180, 180A 180B	—	—	—	—	—	—	—	Solder	—	**58483-1**	C	HX4-1637	**3.84** .151
Mini SMB 75 ohm													
179, 187	—	Female-K699	—	**58483-1**	B	HX4-1637	—	—	—	—	—	—	—
179, 187	—	Solder Center Contact	—	**58483-1**	B	HX4-1637	—	—	—	—	—	—	—

Note: All 75 ohm SMB connectors have a solder center contact.

* DANIELS Manufacturing Corporation
6103 Anno Avenue
Orlando, Florida 32809
Telephone: 407-855-6161
FAX: 407-855-6884

Note: Equivalent military tool part numbers–
M22520/5-01 – DANIELS Hand Tool HX4
M22520/5-33 – DANIELS Die Set Y136
M22520/5-37 – DANIELS Die Set Y138
M22520/5-41 – DANIELS Die Set Y140
M22520/5-03 – DANIELS Die Set Y196
M22520/2-01 – DANIELS Hand Tool AFM8

BELDEN is a trademark of Belden Wire and Cable Company.
DANIELS is a trademark of Daniels Manufacturing Corporation.

Note: Part Numbers are RoHS compliant except: ♦ Indicates non-RoHS compliant.

SMC Connectors

Product Facts

- **Three-piece designs**
- **Fast, clean cable assembly**
- **Connector bodies preassembled**
- **Solderless termination —no danger of heat damage**
- **Center conductor and braid terminated with same tool**
- **Low noise level**
- **Miniature screw-on coupling**
- **PTFE dielectric**

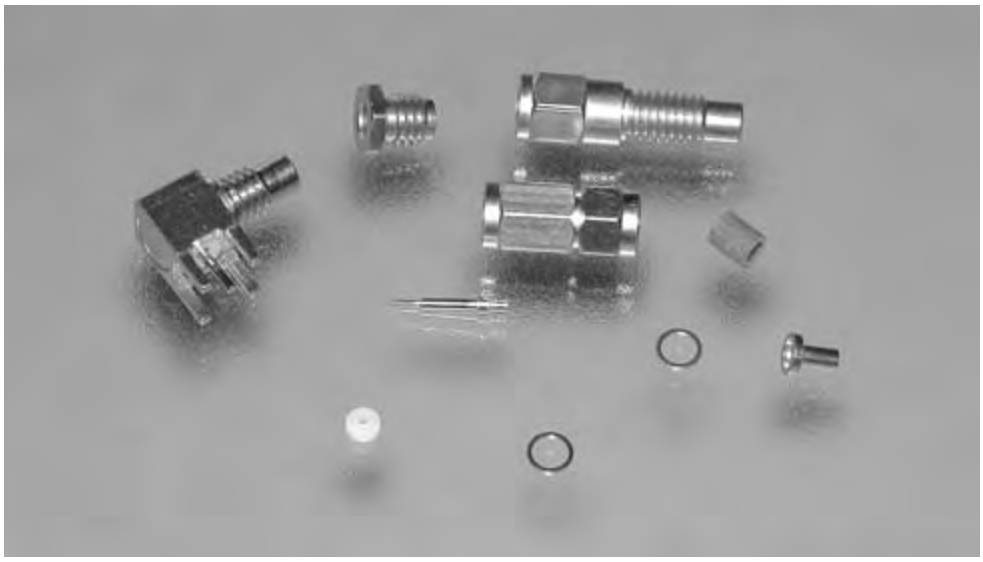

The SMC Connector is miniature and light-weight, especially designed for use in critical applications where limited space and vibration are of major concern.

This connector is designed in accordance with the requirements of Specification MIL-C-39012, Class II, Category B to assure the highest standards of electrical and mechanical performance. It has a constant impedance of 50 ohms, a voltage rating of 350 volts and provides excellent operation at frequencies up to 10 GHz. It also has a threaded coupling and can be used with a wide range of miniature coaxial cable sizes including RG 174, 197, 187, 188 and 316.

Materials

Brass — QQ-B-626
Beryllium Copper — QQ-C-530
Copper — QQ-C-576
PTFE Insulation — MIL-P-19468

Plating

Gold — MIL-G-45204

Electrical Characteristics

Nominal Impedance — 50 ohms
Working Voltage — 335 volts rms
Frequency Range — 0 to 10 GHz
Insulation Resistance — 1000 megohms min.
Contact Resistance —
Outer Contact — 1 milliohms
Center Contact —
Straight Connectors — 6 milliohms
Right-Angle Connectors — 12 milliohms
Dielectric Withstanding Voltage — 1000 volts rms
RF Leakage — –60 dB min., between 2 and 3 GHz
RF Insertion Loss —
Straight Connectors — 0.25 dB max. at 4 GHz
Right-Angle Connectors — 0.50 dB max. at 4 GHz
Corona Level — 250 volts min. at 70,000 ft [21 336 m]

Mechanical Characteristics

Mating/Unmating — 10-32 threaded coupling
Cable Attachment — Crimp type, both center contact and braid
Coupling Nut Retention — 35 lb [156 N] min.
Cable Retention — 20 lb [89 N] min., GR-174 cable
Durability — 500 cycles per MIL-C-39012

Environmental Characteristics

Temperature Range — –65°C to +85°C
Vibration — MIL-STD-1344, Method 2005, Condition IV
Salt Spray — MIL-STD-1344, Method 1001, Condition B
Temperature Cycling — MIL-STD-1344, Method 1003, Condition A (except low temperature is –65°C)

Catalog 1307191
Revised 3-07

www.tycoelectronics.com

Dimensions are in millimeters and inches unless otherwise specified. Values in brackets are standard equivalents.

Dimensions are shown for reference purposes only. Specifications subject to change.

USA: 1-800-522-6752
Canada: 1-905-470-4425
Mexico: 01-800-733-8926
C. America: 52-55-1106-0803

South America: 55-11-2103-6000
Hong Kong: 852-2735-1628
Japan: 81-44-844-8013
UK: 44-8706-080-208

SMC Connectors (Continued)

Straight Plugs

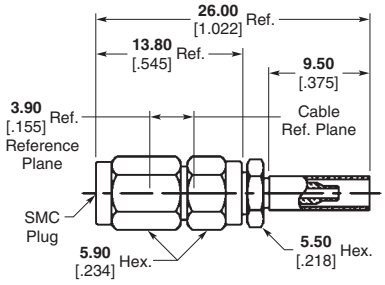

Part No. 1060220-1
Crimp

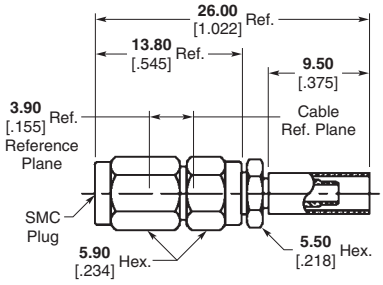

Part No. 1060221-1
Crimp

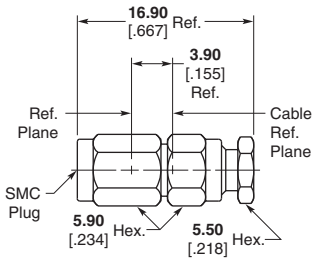

Part No. 1060163-1
Clamp

Cable Attachment	RG/U Cable	Part No.
Crimp	178, 178A, 178B 196, 196A	**1060220-1**
Crimp	174, 316 188, 188A	**1060221-1**
Clamp	174, 316 188, 188A	**1060163-1**

Straight Jacks

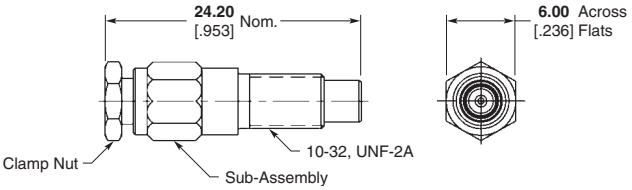

Cable Attachment	RG/U Cable	Part No.
Clamp	174, 316 188, 188A	**1311638-1**

Bulkhead Feedthrough Cable Jacks

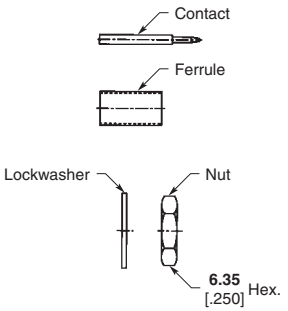

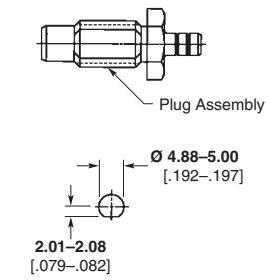

Suggested Panel Cutout

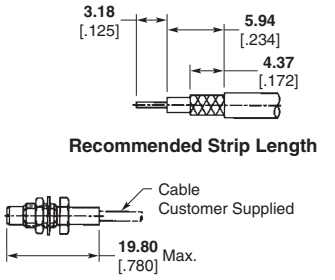

Recommended Strip Length

Assembled View

Cable Attachment	RG/U Cable	Part No.
Crimp	174, 316 188, 188A	**51751-1**

Note: Part Numbers are RoHS compliant except: ♦ Indicates non-RoHS compliant.

Catalog 1307191
Revised 3-07

www.tycoelectronics.com

Dimensions are in millimeters and inches unless otherwise specified. Values in brackets are standard equivalents.

Dimensions are shown for reference purposes only. Specifications subject to change.

USA: 1-800-522-6752
Canada: 1-905-470-4425
Mexico: 01-800-733-8926
C. America: 52-55-1106-0803

South America: 55-11-2103-6000
Hong Kong: 852-2735-1628
Japan: 81-44-844-8013
UK: 44-8706-080-208

SMC Connectors (Continued)

Press-In Panel Jacks, Straight Terminal

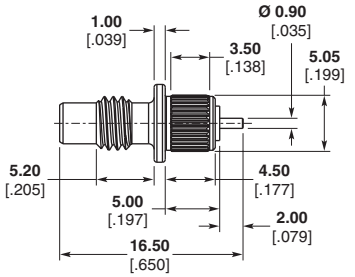

Part No. 1460470-1

Right-Angle Cable Plug

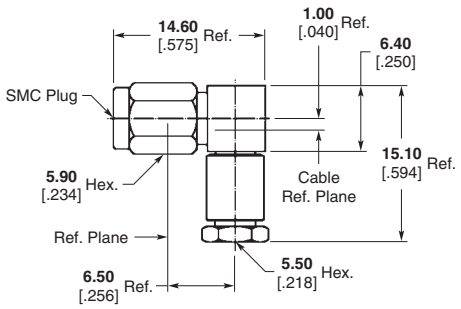

Cable Attachment	RG/U Cable	Part No.
Clamp	174, 316 188, 188A	**1060183-1**

PC Board Jack Receptacles

Straight

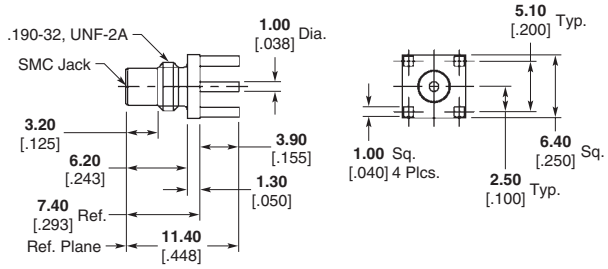

Part No. 1060256-1

Right-Angle

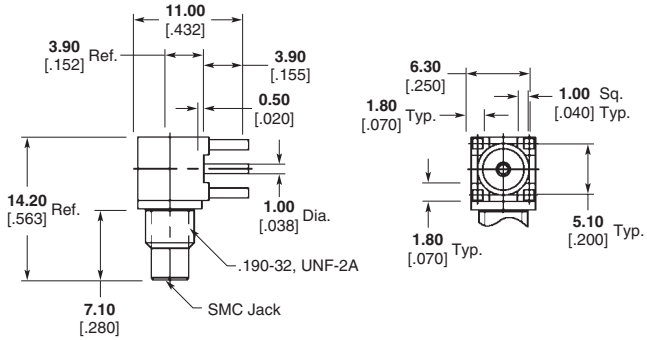

Part No. 1060259-1

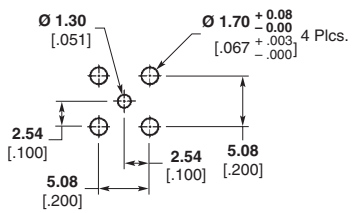

Rcommended PC Board Layout

Note: Part Numbers are RoHS compliant except: ♦ Indicates non-RoHS compliant.

Catalog 1307191
Revised 3-07

www.tycoelectronics.com

Dimensions are in millimeters and inches unless otherwise specified. Values in brackets are standard equivalents.

Dimensions are shown for reference purposes only. Specifications subject to change.

USA: 1-800-522-6752
Canada: 1-905-470-4425
Mexico: 01-800-733-8926
C. America: 52-55-1106-0803

South America: 55-11-2103-6000
Hong Kong: 852-2735-1628
Japan: 81-44-844-8013
UK: 44-8706-080-208

MCX Connectors

Product Facts

- **Snap-on interface facilitates assembly**
- **Conforms to CECC interface specifications for MCX**
- **30% smaller than SMB connectors**
- **Surface mount tape and reel for high volume**
- **50 and 75 ohm versions available**

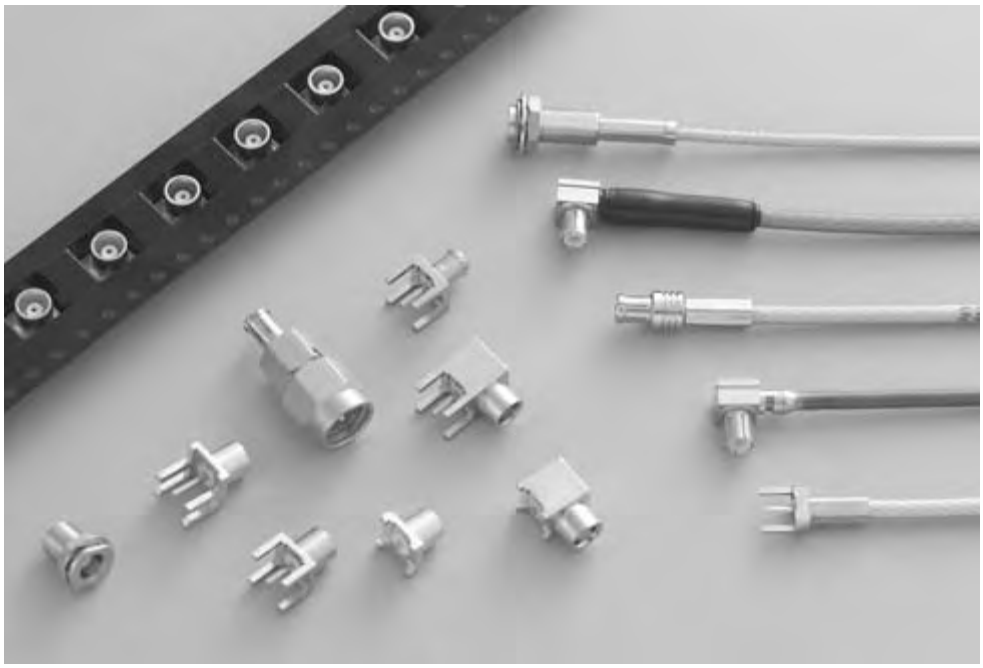

Between Series Adapters

For MCX Between Series Adapters, see pages 251-260.

Tyco Electronics MCX microminiature snap-on connectors offer an excellent blend of size, durability and performance for emerging applications in GPS, automotive and wireless communications. MCX connectors are 30% smaller than traditional snap-on SMB connectors, offering greater packaging density and weight reduction. MCX connectors are mechanically robust with beryllium copper spring fingers rated at a minimum of 500 mating cycles. The snap-on interface facilitates assembly, eliminating the need for a threaded connection, and ensuring full engagement. The forces to engage and disengage have been optimized to ensure ease of mating as well as to prevent damage to PCB solder connections. MCX connectors are designed for broad band performance, DC-6 GHz, and can be utilized for future system upgrades without concerns for performance degradation. Tyco Electronics MCX connectors are fully mateable with standard MCX connectors and conform to the CECC interface specifications.

MCX connectors are available in a broad range of standard configurations for commercial applications. Tape and reel packaging for MCX surface mount straight and right-angle PCB receptacles is available to facilitate high volume pick and place manufacturing. MCX surface mount connectors are designed to withstand infrared reflow, convection and vapor phase soldering and provide a .254 [.010] standoff for optimal board cleaning. MCX plug and jack PCB receptacles also offer a direct board to board solution providing a nominal 7.11 [0.28] separation.

Catalog 1307191
Revised 3-07

www.tycoelectronics.com

Dimensions are in millimeters and inches unless otherwise specified. Values in brackets are standard equivalents.

Dimensions are shown for reference purposes only. Specifications subject to change.

USA: 1-800-522-6752
Canada: 1-905-470-4425
Mexico: 01-800-733-8926
C. America: 52-55-1106-0803

South America: 55-11-2103-6000
Hong Kong: 852-2735-1628
Japan: 81-44-844-8013
UK: 44-8706-080-208

MCX Connectors (Continued)

Specifications

General	CECC 22220 PARA		
Materials	—	Brass alloys UNS C36000 (ASTM-B16) or C38500 per QQ-B626, Beryllium copper per ASTM B-196, PTFE fluorocarbon per ASTM-D-1710	
Finish	—	Center Contacts:	Gold plated (ASTM-B488) over nickel plate (QQ-N-290)
	—	Outer Contacts:	Gold plated (ASTM-B488) over nickel plate (OO-N-290)
	—	Housings:	Nickel plated (QQ-N-290), tin (ASTM-B488) or Gold plated (ASTM-B488)
	—	All other metal parts shall be furnished so as to provide a connector which meets corrosion requirements of CECC 22220 PARA 4.6.10	
Design	—	The design shall be such that the outline and interface dimensions shown in this catalog and the requirements of CECC 22220 PARA are met	

Electrical	CECC 22220 PARA	(General requirements performance may vary by cable)
Frequency	—	dc - 6 GHz
Nominal Impedance	—	50 ohms
Voltage Rating	—	335 Volts (VRMS Maximum) @ Sea Level
VSWR	4.4.1	1.25:1 Maximum @ 4 GHz
	—	1.35:1 Maximum @ 6 GHz
Insulation Resistance	4.4.4	10,000 Megohms Minimum
Insertion Loss	—	.1dB Maximum/1000 MHz
Dielectric Withstanding Voltage	4.4.5	1000 Volts (VRMS Minimum) @ Sea Level
Contact Resistance		
Center Contact	4.4.2	5.0 Milliohms Maximum
Outer Contact	4.4.3	1.0 Milliohms Maximum
Corona 70,000 ft.	—	250 Volts (VRMS Minimum) @ MHz
RF High Potential @ Sea Level	—	670 Volts (VRMS Minimum) @ MHz
Contact Current	—	1.5 ADC Max

Mechanical	CECC 22220 PARA	
Force to Engage	4.5.4	15.5 N [3.4 lbs.] Maximum
Force to Disengage	—	8 – 20 N [1.8 – 4.5 lbs.]
Contact Captivation	4.5.2	Designed to maintain MCX interface when mating 10 N [2.2 lbs.] axial
Connector Durability	4.7.1	500 insertion and withdrawal cycles

Environmental	CECC 22220 PARA	
Temperature Rating	—	–65˚C + 165˚C
Vibration	4.6.3	See CECC 22220
Moisture Resistance	4.6.4	See CECC 22220
Corrosion	4.6.10	See CECC 22220
Thermal Shock	4.6.7	See CECC 22220

Meets or exceeds requirements of CECC 22220. Tyco Electronics has design control and all data contained herein is subject to change without notice. Contact Tyco Electronics for specifications on other connector types.

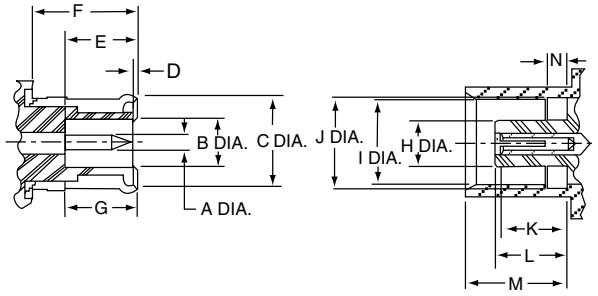

Plug

Letter	Minimum	Maximum
A	**0.48** [.0189]	**0.53** [.0208]
B	**2.00** [.0788]	—
C	—	**3.8** [.148]
D	**0.00** [.000]	**0.30** [.0118]
E	**2.80** [.111]	**3.20** [.125]
F	**4.15** [.164]	—
G	**2.80** [.111]	—

Jack

Letter	Minimum	Maximum
H	—	**1.98** [.077]
I	**3.42** [.135]	**3.48** [.137]
J	**3.60** [.142]	**3.75** [.147]
K	**2.30** [.091]	**2.80** [.110]
L	**2.60** [.103]	**2.80** [.110]
M	**4.00** [.158]	**4.12** [.162]
N	**0.75** [.0296]	**0.85** [.0334]

Catalog 1307191
Revised 3-07

www.tycoelectronics.com

Dimensions are in millimeters and inches unless otherwise specified. Values in brackets are standard equivalents.

Dimensions are shown for reference purposes only. Specifications subject to change.

USA: 1-800-522-6752
Canada: 1-905-470-4425
Mexico: 01-800-733-8926
C. America: 52-55-1106-0803

South America: 55-11-2103-6000
Hong Kong: 852-2735-1628
Japan: 81-44-844-8013
UK: 44-8706-080-208

MCX Connectors (Continued)

Straight Cable Plug, Crimp



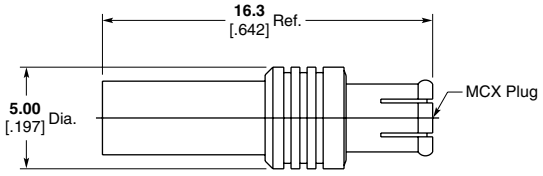

Cable	Plating	Part No.
RG 178/U, 196/U	Nickel	**1060869-1**
RG 174/U, 188/U, 316/U	Nickel	**1060872-1**
	Gold	**1060871-1**
RD-316	Nickel	**1060875-1**
	Gold	**1060875-2**

Note: For full crimp attachment consult Tyco Electronics at the numbers listed below.

Right-Angle Cable Plug, Crimp



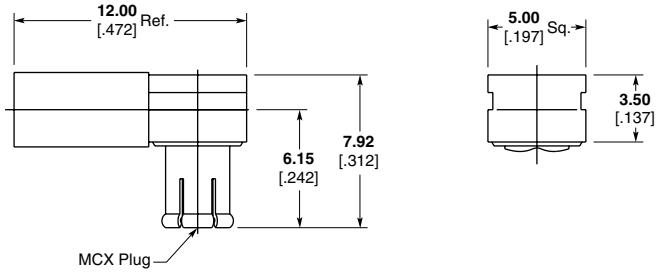

Cable	Plating	Part No.
RG 178/U, 196/U	Nickel	**1329293-1**
RG 188/U, 316/U RG 179/U, RG 187/U	Nickel	**1330723-1**
RD-316	Nickel	**1363301-1**
	Gold	**1363301-2**

Straight Cable Terminal, PC Board, Without Center Contact

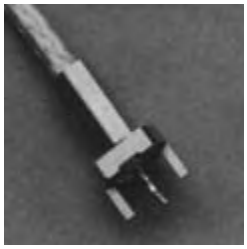

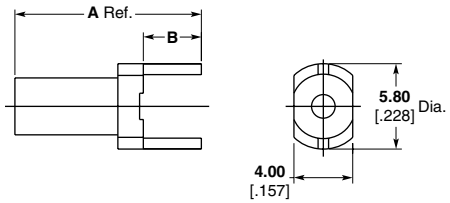

Cable	Dim. A	Dim. B	Plating	Part No.
RG 174/U, 188/U, 316/U	**11.76** .463	**3.94** .155	Nickel	**1060811-1**
			Gold	**1060811-2**
	10.74 .423	**2.92** .115	Gold	**1060813-2**

Note: Part Numbers are RoHS compliant except: ♦ Indicates non-RoHS compliant.

Catalog 1307191
Revised 3-07

www.tycoelectronics.com

Dimensions are in millimeters and inches unless otherwise specified. Values in brackets are standard equivalents.

Dimensions are shown for reference purposes only. Specifications subject to change.

USA: 1-800-522-6752
Canada: 1-905-470-4425
Mexico: 01-800-733-8926
C. America: 52-55-1106-0803

South America: 55-11-2103-6000
Hong Kong: 852-2735-1628
Japan: 81-44-844-8013
UK: 44-8706-080-208

MCX Connectors (Continued)

Bulkhead Cable Jack



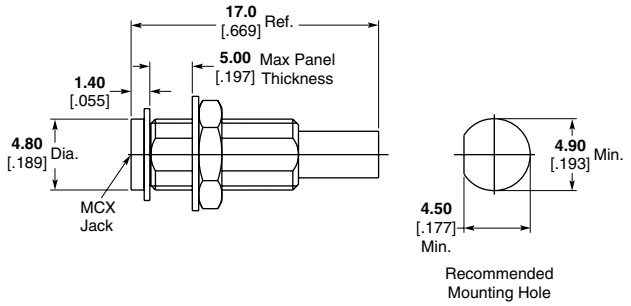

Cable	Plating	Part No.
RG 188/U, RG 316/U	Nickel	**1060883-1**

Straight Cable Plug, Direct Solder Attachment

For Semi-Rigid Cable



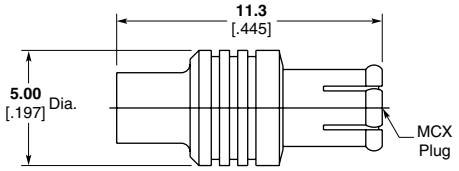

Cable	Plating	Part No.
RG 405/U [.085]	Gold	**1060772-1**
.047	Gold	**1060772-2**

Straight Cable Jack, Direct Solder Attachment

For Semi-Rigid Cable



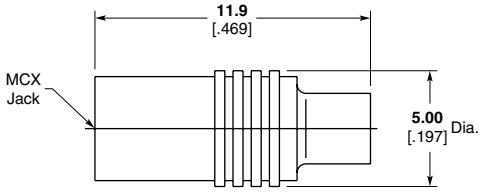

Cable	Plating	Part No.
RG 405/U [.085]	Gold	**1060774-1**
.047	Gold	**1060774-2**

Note: Part Numbers are RoHS compliant except: ♦ Indicates non-RoHS compliant.

Catalog 1307191
Revised 3-07

www.tycoelectronics.com

Dimensions are in millimeters and inches unless otherwise specified. Values in brackets are standard equivalents.

Dimensions are shown for reference purposes only. Specifications subject to change.

USA: 1-800-522-6752
Canada: 1-905-470-4425
Mexico: 01-800-733-8926
C. America: 52-55-1106-0803

South America: 55-11-2103-6000
Hong Kong: 852-2735-1628
Japan: 81-44-844-8013
UK: 44-8706-080-208

MCX Connectors (Continued)

Right-Angle Plug Receptacle, Direct Solder Attachment

For Semi-Rigid Cable



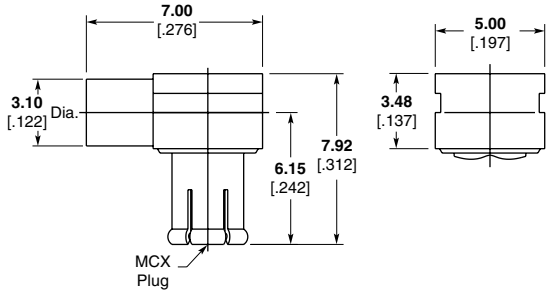

Cable	Plating	Part No.
RG 405/U	Gold	**1060787-1**

Vertical Plug Receptacle, PC Board



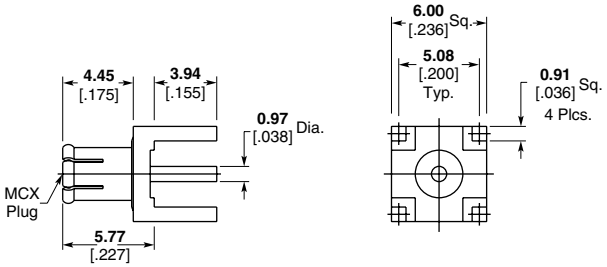

Plating	Part No.
Nickel	**1061015-1**
Gold	**1085221-1**

Vertical Jack Receptacle, PC Board



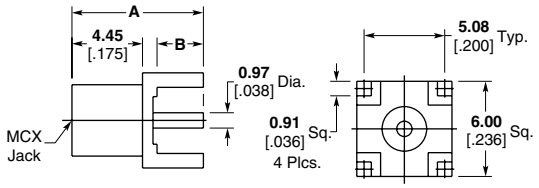

Dim. A	Dim. B	Plating	Part No.
8.28 .326	**2.92** .115	Nickel	**1060985-1**
		Gold	**1060984-1**
9.30 .366	**3.94** .155	Nickel	**1060989-1**
		Gold	**1330126-1**
7.09 .279	**1.73** .068	Nickel	**1060996-1**
		Gold	**1060995-1**

Note: Part Numbers are RoHS compliant except: ♦ Indicates non-RoHS compliant.

Catalog 1307191
Revised 3-07

www.tycoelectronics.com

Dimensions are in millimeters and inches unless otherwise specified. Values in brackets are standard equivalents.

Dimensions are shown for reference purposes only. Specifications subject to change.

USA: 1-800-522-6752
Canada: 1-905-470-4425
Mexico: 01-800-733-8926
C. America: 52-55-1106-0803

South America: 55-11-2103-6000
Hong Kong: 852-2735-1628
Japan: 81-44-844-8013
UK: 44-8706-080-208

MCX Connectors (Continued)

Vertical End Launch, PC Board

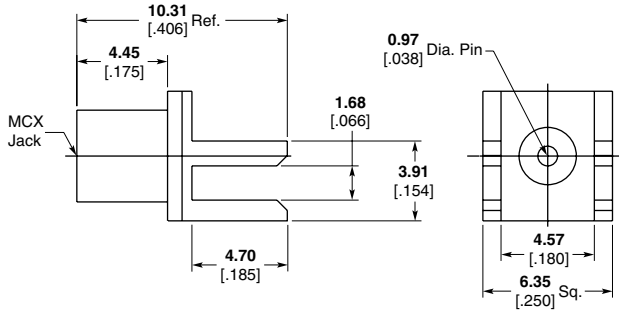

Plating	Part No.
Tin	**1061007-1**

Right-Angle Jack Receptacle, PC Board



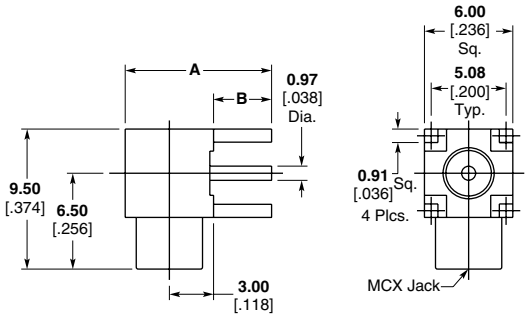

Dim. A	Dim. B	Plating	Part No.
9.93 [.391]	**3.94** [.155]	Nickel	**1061023-1**
		Gold	**1061022-1**
7.72 [.304]	**1.73** [.068]	Nickel	**1061027-1**
		Gold	**1061026-1**
8.92 [.351]	**2.92** [.115]	Nickel	**1061030-1**
		Gold	**1061029-1**

Jack Receptacle, Bulkhead Feedthrough



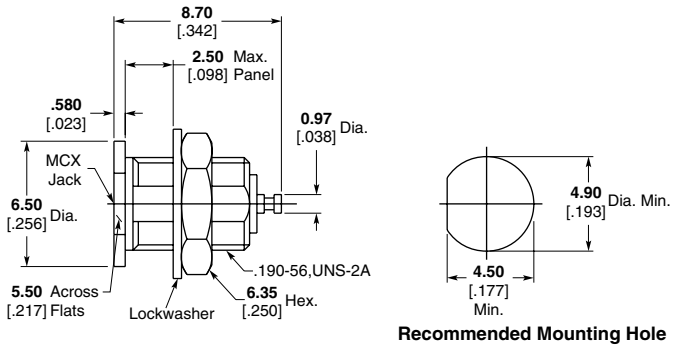

Recommended Mounting Hole

Plating	Part No.
Nickel	**1060960-1**
Gold	**1060959-1**

Note: Part Numbers are RoHS compliant except: ♦ Indicates non-RoHS compliant.

Catalog 1307191
Revised 3-07

www.tycoelectronics.com

Dimensions are in millimeters and inches unless otherwise specified. Values in brackets are standard equivalents.

Dimensions are shown for reference purposes only. Specifications subject to change.

USA: 1-800-522-6752
Canada: 1-905-470-4425
Mexico: 01-800-733-8926
C. America: 52-55-1106-0803

South America: 55-11-2103-6000
Hong Kong: 852-2735-1628
Japan: 81-44-844-8013
UK: 44-8706-080-208

MCX Connectors (Continued)

Vertical Jack Receptacle, Surface Mount



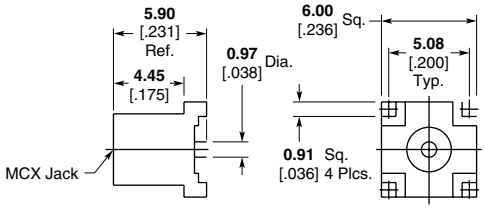

Plating	Part No.
Tin	6061002-1
	6061092-1[1]

[1]Tape and Reel packaging. 900 connectors per reel (carrier width 16mm, carrier pitch 12mm).

Right-Angle Jack Receptacle, Surface Mount



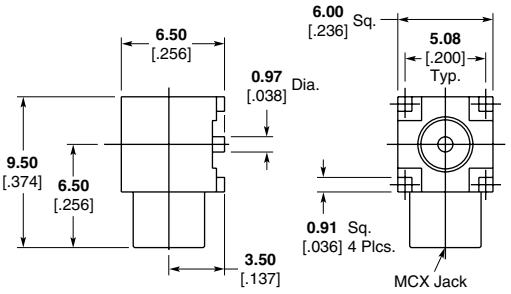

Plating	Part No.
Tin	6061035-1
Tin	6061094-1[1]

[1]Tape and reel packaging. 750 connectors per reel (carrier width 24mm carrier pitch 12mm).

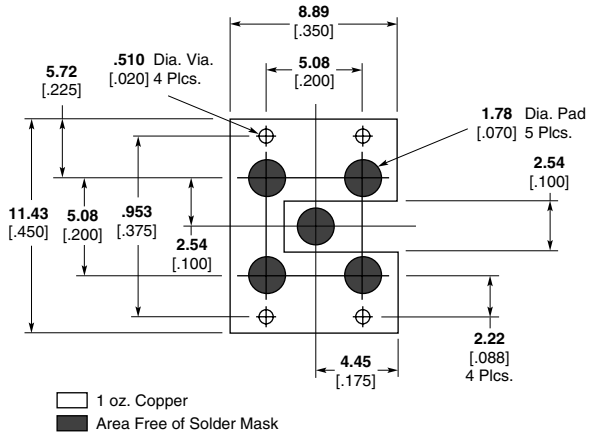

Recommended Mounting Pattern for Microstrip Line

Notes:
1. Printed circuit board material: glass epoxy FR-4 or similar; relative permittivity: 4.8, 1 oz. copper clad both sides.
2. These dimensions valid for 1.58 [.062] board thickness.
3. Decimal inch equivalents are shown in parentheses for general information only.

Note: Part Numbers are RoHS compliant except: ♦ Indicates non-RoHS compliant.

Catalog 1307191
Revised 3-07

www.tycoelectronics.com

Dimensions are in millimeters and inches unless otherwise specified. Values in brackets are standard equivalents.

Dimensions are shown for reference purposes only. Specifications subject to change.

USA: 1-800-522-6752
Canada: 1-905-470-4425
Mexico: 01-800-733-8926
C. America: 52-55-1106-0803

South America: 55-11-2103-6000
Hong Kong: 852-2735-1628
Japan: 81-44-844-8013
UK: 44-8706-080-208

MCX Connectors (Continued)

Straight Cable Plug, Crimp, 75 Ohm

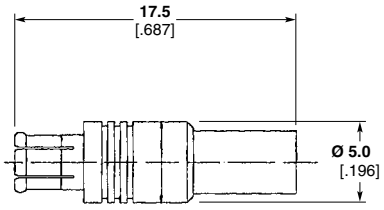

Cable	Plating	Part No.
RG 179/U	Nickel	**1362990-1**

Right-Angle Cable Plug, Crimp, 75 Ohm

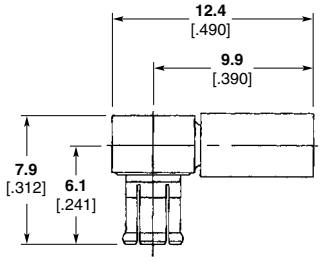

Cable	Plating	Part No.
RG 179/U	Nickel	**1362991-1**

Vertical Plug, PC Board, 75 Ohm

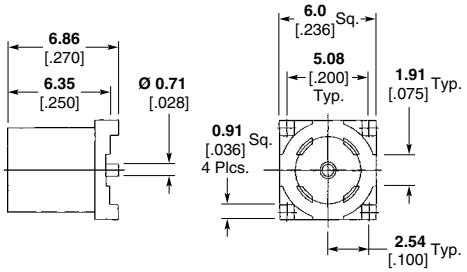

Plating	Part No.
Nickel	**1361169-1**

Vertical Jack, PC Board, 75 Ohm

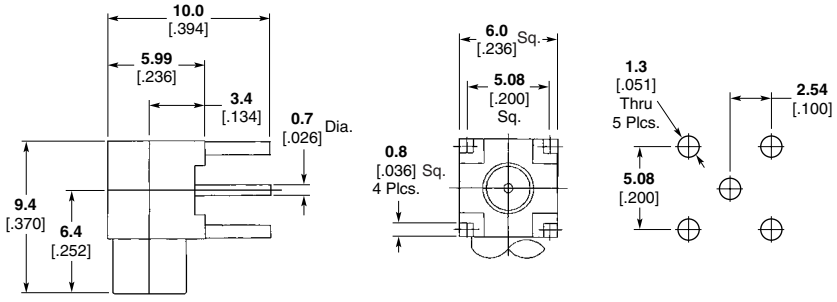

Plating	Part No.
Gold	**1363106-1**

Note: Part Numbers are RoHS compliant except: ♦ Indicates non-RoHS compliant.

Catalog 1307191
Revised 3-07

www.tycoelectronics.com

Dimensions are in millimeters and inches unless otherwise specified. Values in brackets are standard equivalents.

Dimensions are shown for reference purposes only. Specifications subject to change.

USA: 1-800-522-6752
Canada: 1-905-470-4425
Mexico: 01-800-733-8926
C. America: 52-55-1106-0803
South America: 55-11-2103-6000
Hong Kong: 852-2735-1628
Japan: 81-44-844-8013
UK: 44-8706-080-208

Compression Coax Board-to-Board Connectors

Board-to-Board RF Connector Series

- **Single connector product**
- **Surface mount technology**
- **Excellent price-to-performance ratio**

Product Facts

- **Single connector design — no mating connectors needed**
- **Available in four sizes for varied board spacing: 14mm, 10mm, 6.65mm and 4mm**
- **Large radial and axial misalignment: For positioning both boards and for gap between boards**
- **Surface Mount Device for standard pick & place compatibility**
- **Gold plated phosphor bronze and brass contacts, stainless steel springs**
- **Mating directly on target board**
- **Easy connection without risk of breaking soldering or connector when mating or unmating**
- **Low applied material and assembly costs**

Applications

- **Modular parallel board-to-board blindmate applications**
- **Base Station / Sub Station systems**
- **PDA / PCS / Cellular Handset applications**
- **Wireless Communications systems (GSM, PCS, WCDMA, UMTS)**





Specifications

Characteristic Impedance — 50 Ohms

Frequency Range — Up to 6 GHz

Return Loss — –20dB min.; up to 2.2 GHz (all misalignments)

Shielding Effectiveness — –60 dB min.; up to 2.2 GHz

Working Voltage — 125 VAC, 50 Hz (at sea level)

Dielectric Withstanding Voltage — 500 VAC, 50 Hz (at sea level)

Insulation Resistance — 100 Megohms

Operating Temperature — –40 to +125°C

Mating Force — 10 N

Durability — 25 cycles

Angle Between Boards — ± 2° max.

Axial Misalignment — ± 1.0mm from nominal boards stacking height; ± 0.4mm, ± 0.3mm for shortest models (Part Numbers 619135 and 1658260)

Radial Misalignment — ± 0.8mm from center line in any direction

Vibration — 20 g between 58-500 Hz (Const. amplitude of 1.5 mm between 10-58 Hz)

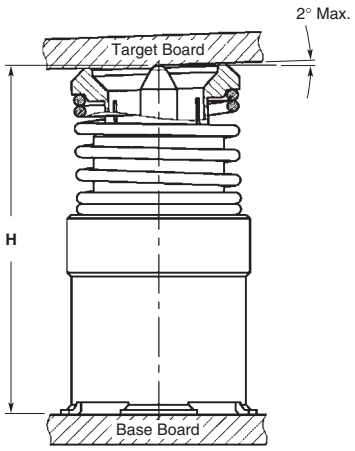

Part Number	Height "H"
619127-1	14 ± 1.0mm
619134-1	10 ± 1.0mm
619135-1	6.65 ± 0.4mm
1658260-1	4 ± 0.3mm

Related Product Data

Internet — http://tycoelectronics.com/products/rfcoax

Product Specification/Design Objectives — 108-71060

Test Report — 501-90021

Sample Kit — 1-1773441-3

Note: Part Numbers are RoHS compliant except: ♦ Indicates non-RoHS compliant.

Catalog 1307191
Revised 3-07

www.tycoelectronics.com

Dimensions are in millimeters and inches unless otherwise specified. Values in brackets are standard equivalents.

Dimensions are shown for reference purposes only. Specifications subject to change.

USA: 1-800-522-6752
Canada: 1-905-470-4425
Mexico: 01-800-733-8926
C. America: 52-55-1106-0803

South America: 55-11-2103-6000
Hong Kong: 852-2735-1628
Japan: 81-44-844-8013
UK: 44-8706-080-208

STAX Coax Connectors

Product Facts

- **Low cost, low height and high performance**
- **Low insertion loss 0 to –0.5 dB from 0 to 6 GHz**
- **VSWR < 1.07 from 0 to 6 GHz**
- **Wide working range of deflection**
- **Long term reliability and durability**
- **Surface mount/pick and place**
- **Low board separation ≤ 2.5 mm**
- **Technology can support board separations ≤ 1.5 mm**
- **Easily modified free height**
- **No tooling required for height modifications**
- **Modified prototype samples within 2 weeks**



Tyco Electronics' STAX coax RF connector is the first surface mount RF board-to-board connector on the market that uses elastomeric connector technology to provide an economical means to achieve low board separation while maintaining excellent RF signal integrity between PCBs.

The connector uses laminated sections of conductive and non-conductive silicone that are tuned to provide a 50 ohm impedance line between mated substrates. The single piece construction of the STAX coax RF connector eliminates some of the signal anomalies normally associated with mated pairs of metal contact coax connectors. The dimensional relationship of the inner and outer conductor is consistently maintained throughout the connector.

With its metal holder, the STAX coax RF connector can be surface mount soldered to the PCB. An additional metal SMT holder aligns the connector to the mating PCB. If adequate PCB alignment is already maintained by other means, the STAX RF connector may not need the additional mating receptacle and can become a blindmating connector. This has an additional advantage in space constrained mobile applications where very fine-pitch board-to-board connectors are also used.

Related Product Data

Internet — www.elastomerictech.com
www.tycoelectronics.com

Elastomeric Technologies Applications Engineering —
Phone: 1-800-989-STAX ext. 4453
Fax: 1-215-784-4522
E-mail: ETIapplicationseng@tycoelectronics.com

Technical Documents —
Qualification Test Report — T R 368
RF Performance Report — 00266

Electrical Characteristics

Contact Resistance — < 50 mΩ

Insulation Resistance — 10^{12} Ω min.

Dielectric Withstanding Voltage (without breakdown or arcing) — 1000 Volt

Physical Characteristics

Board Separation — 2.5 mm ± 0.2 (std. part)

PCB Board Area — 4.0 mm dia.

Typical Clamping Force — See chart

Environmental Characteristics

Operating Temperature — –40°C to +125°C

Moisture — 0 to 100% RH

Catalog 1307191
Revised 3-07

www.tycoelectronics.com

Dimensions are in millimeters and inches unless otherwise specified. Values in brackets are standard equivalents.

Dimensions are shown for reference purposes only. Specifications subject to change.

USA: 1-800-522-6752
Canada: 1-905-470-4425
Mexico: 01-800-733-8926
C. America: 52-55-1106-0803

South America: 55-11-2103-6000
Hong Kong: 852-2735-1628
Japan: 81-44-844-8013
UK: 44-8706-080-208

STAX Coax Connectors (Continued)

Description	Part Number
STAX SMT Coax Connector Assembly: Consists of STAX Coax elastomer in round SMT holder	619229-1
Mating SMT Target Holder: Controls alignment between PCBs	619238-2
STAX Coax RF Elastomer only: Used with customer furnished holder	1442004-1

Part Number 619229-1 SMT STAX Coaxial Connector Assembly

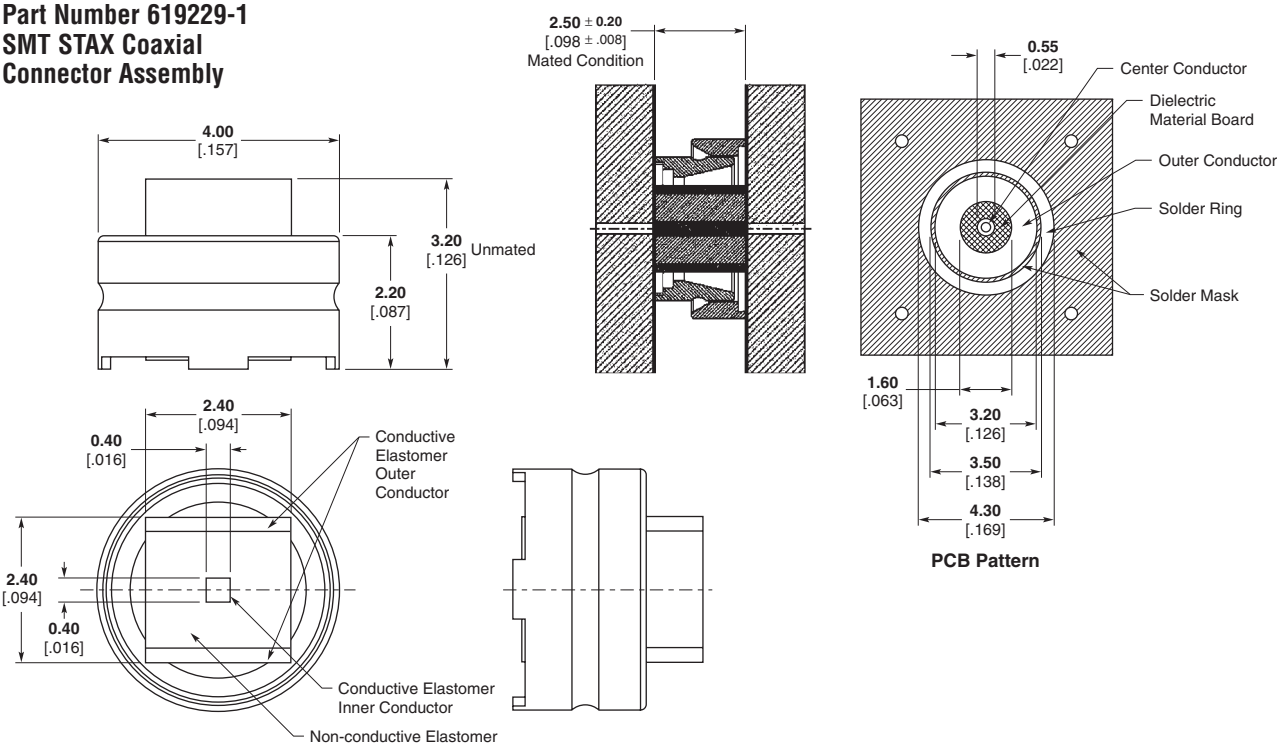

Part Number 619238-2 SMT Mating Target Holder

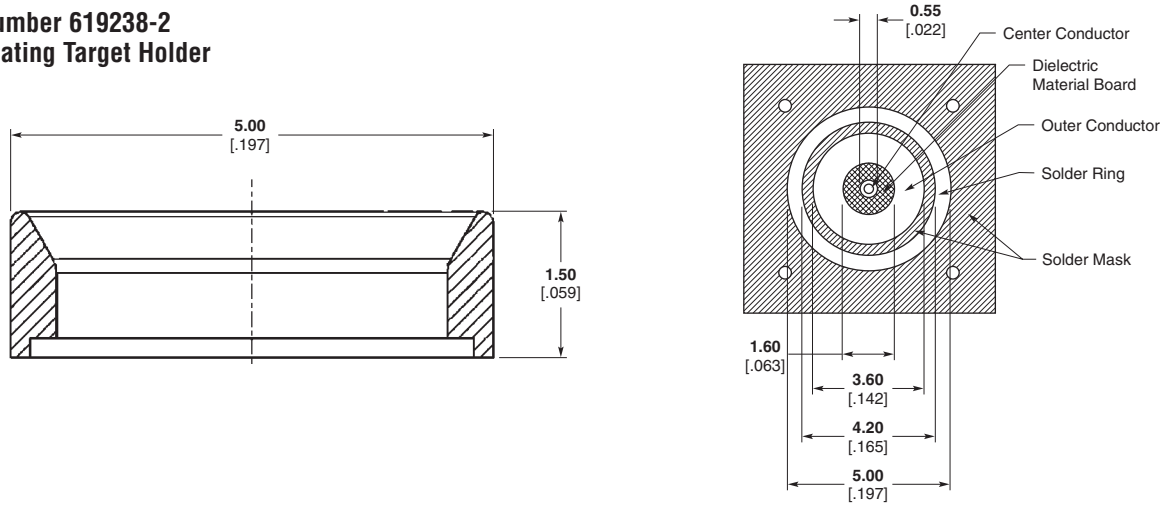

Note: Part Numbers are RoHS compliant except: ♦ Indicates non-RoHS compliant.

Catalog 1307191
Revised 3-07

www.tycoelectronics.com

Dimensions are in millimeters and inches unless otherwise specified. Values in brackets are standard equivalents.

Dimensions are shown for reference purposes only. Specifications subject to change.

USA: 1-800-522-6752
Canada: 1-905-470-4425
Mexico: 01-800-733-8926
C. America: 52-55-1106-0803

South America: 55-11-2103-6000
Hong Kong: 852-2735-1628
Japan: 81-44-844-8013
UK: 44-8706-080-208

SMT/QuickGrip® Connectors

Product Facts

- **Solderless Cable Termination**
- **3.0 [.118] Mated Height**
- **Excellent Cable Retention**
- **Usable With Flexible and Semi-Rigid Micro-Coaxial Cables**
- **Tape and Reel Packaging**

Tyco Electronics revolutionary SMT/QuickGrip product line is designed to meet the growing demand for a reliable, low cost system for direct termination of coax to a printed circuit board (PCB). SMT/QuickGrip technology eliminates the requirement to connectorize the coaxial cable, reducing assembly times and, therefore, cost. The SMT/QuickGrip surface mount device occupies less PCB area than conventional through hole coaxial connectors. An innovative microstrip mounting pattern and cable receptacle design ensures excellent grounding and PCB retention. The SMT/QuickGrip cable termination system stands a mere 3.0 [.118] off the board when mated, allowing for closer pitch/spacing when designing a system. The SMT/QuickGrip design provides optimal cable retention for applications where shock, vibration, and/or cable flexure may be encountered. This unique RF design accepts both flexible and semi-rigid micro-coaxial cables while delivering exceptional RF performance up to 3GHz.

These features make this system extremely versatile for design engineers and offer a reliable, cost effective alternative to direct soldering of cable to the PCB. The cable is inserted into the device by means of a simple self-aligning hand tool, eliminating the requirement for skilled personnel. This system removes the possibility of damaged PCBs and cables which are common quality issues associated with direct solder, while providing superior RF performance. The SMT/QuickGrip accommodates multiple cable insertions allowing easy replacement of cables for repairs. This receptacle is designed for high volume assembly using surface mount technology and is available in tape and reel packaging for pick and place board assembly. Prestripped cables and interseries cable pigtails are available as turnkey solutions for your application needs (i.e.: for use in multi-board applications, for connecting antennas to the PCB, or point to point transmission on the same PCB).

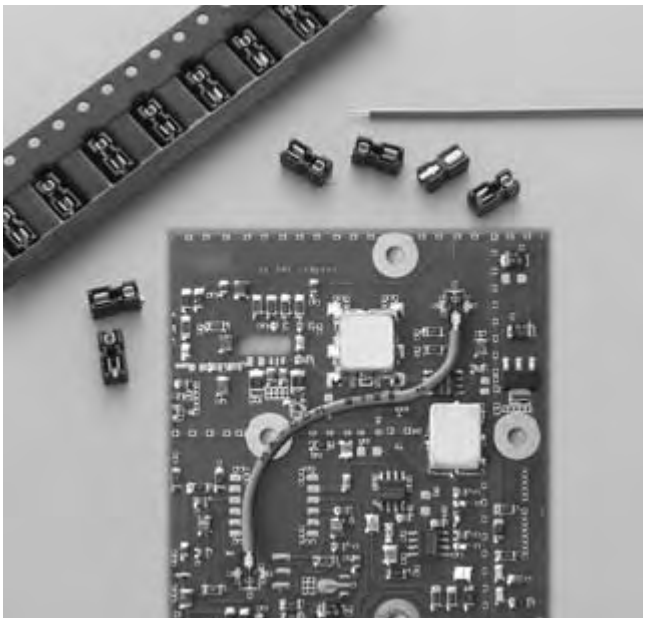

The SMT/QuickGrip cable termination system is ideal for wireless surface mount applications in handsets, pagers and personal digital assistants (PDA). The SMT/QuickGrip mechanical and electrical performance, coupled with its ease of use, ensure it to be a high quality, reliable solution for current and future interconnect needs. Tyco Electronics is an ISO9001 certified manufacturer and maintains an SPC controlled manufacturing environment. Please call your local Sales or Distribution office for additional information and qualification samples today.

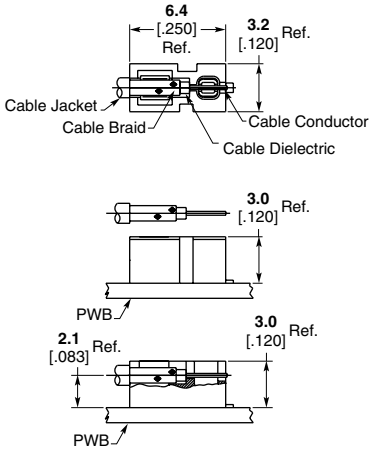

Omni-Flex 200 cable is a Tyco Electronics specified cable.

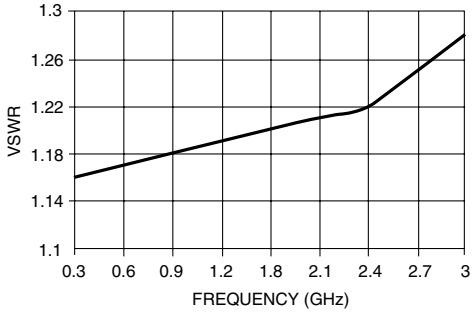

Typical VSWR using SMT/QuickGrip with Omni-Flex 200 Cable

Catalog 1307191
Revised 3-07

www.tycoelectronics.com

Dimensions are in millimeters and inches unless otherwise specified. Values in brackets are standard equivalents.

Dimensions are shown for reference purposes only. Specifications subject to change.

USA: 1-800-522-6752
Canada: 1-905-470-4425
Mexico: 01-800-733-8926
C. America: 52-55-1106-0803

South America: 55-11-2103-6000
Hong Kong: 852-2735-1628
Japan: 81-44-844-8013
UK: 44-8706-080-208

SMT/QuickGrip♦ Connectors (Continued)

Specifications

General		
Materials		
Housing:	Polyphenylene Sulfide (PPS)	
Contacts:	Copper Alloy	
Finishes		
Contacts:	Gold Plate over Nickel	
Electrical		
Frequency Range:	DC - 3GHz	
Impedance:	Usable with 50 & 75 Ohm systems	
Insertion Loss:	$.08\sqrt{f\,\text{GHz}}$	
DWV:	750 VRMs	
VSWR:	1.3:1@ 3GHz (Omni-Flex 200 and .047 [.002] Semi-Rigid) 1.4:1 @ 3GHz (.034 [.001] Semi-Rigid)	
Mechanical		
Connector Durability:	5 mating cycles min. (receptacle only)	
Tape and Reel Packaging:	16 [.629] per EIA-481	
Force to Disengage by Cam-Out (grams):	Omni-Flex 200 Cable -	543 typical
	.034 [.001] Semi-Rigid -	852 typical
	.047 [.002] Semi-Rigid -	1066 typical
Environmental		
Temperature Rating:	–40°C(–40°F) to 125°C(257°F) when mated with Omni-Flex 200 Cable	
Resistance to Solder Heat:	Infrared, convection, and vapor phase solderable (receptacle only). Maximum reflow time/temperature not to exceed 260°C for 3 minutes.	
Cable Information		
	Omni-Flex 200 Cable	
Materials:	FEP Flexible Cable (200°C)	
Jacket:	Fluorinated Ethylene Propylene	
Shield:	Silver plated copper wire, 44 AWG, 90% min. coverage	
Dielectric:	PTFE (Polytetrafluoroethylene)	
Center Conductor:	Silver Plated Copper Clad Steel, 30 AWG	
Minimum Bend Radius:	6.35 [.250]	
Insertion Loss (PVC and FEP cable only):	1.3dB/m, 0.4 dB/ft. @ 500 MHz 2.0dB/m, 0.5 dB/ft. @ 1 GHz 3.0dB/m, 0.9 dB/ft. @ 2 GHz	
Center Conductor Resistance:	.26 Ohms per foot average	

Strip Dimensions

Tyco Electronics
Omni-Flex 200 Cable
Part Number 1407578-1

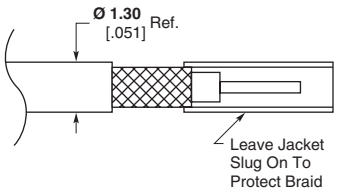

Semi-Rigid Cable
(.034 and .047)

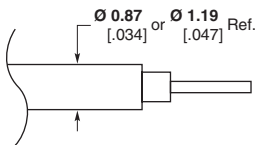

Omni-Flex 200 cable is a Tyco Electronics specified cable.

Note: Part Numbers are RoHS compliant except: ♦ Indicates non-RoHS compliant.

Catalog 1307191
Revised 3-07

www.tycoelectronics.com

Dimensions are in millimeters and inches unless otherwise specified. Values in brackets are standard equivalents.

Dimensions are shown for reference purposes only. Specifications subject to change.

USA: 1-800-522-6752
Canada: 1-905-470-4425
Mexico: 01-800-733-8926
C. America: 52-55-1106-0803

South America: 55-11-2103-6000
Hong Kong: 852-2735-1628
Japan: 81-44-844-8013
UK: 44-8706-080-208

SMT/QuickGrip♦ Connectors (Continued)

PC Board Mount Receptacle

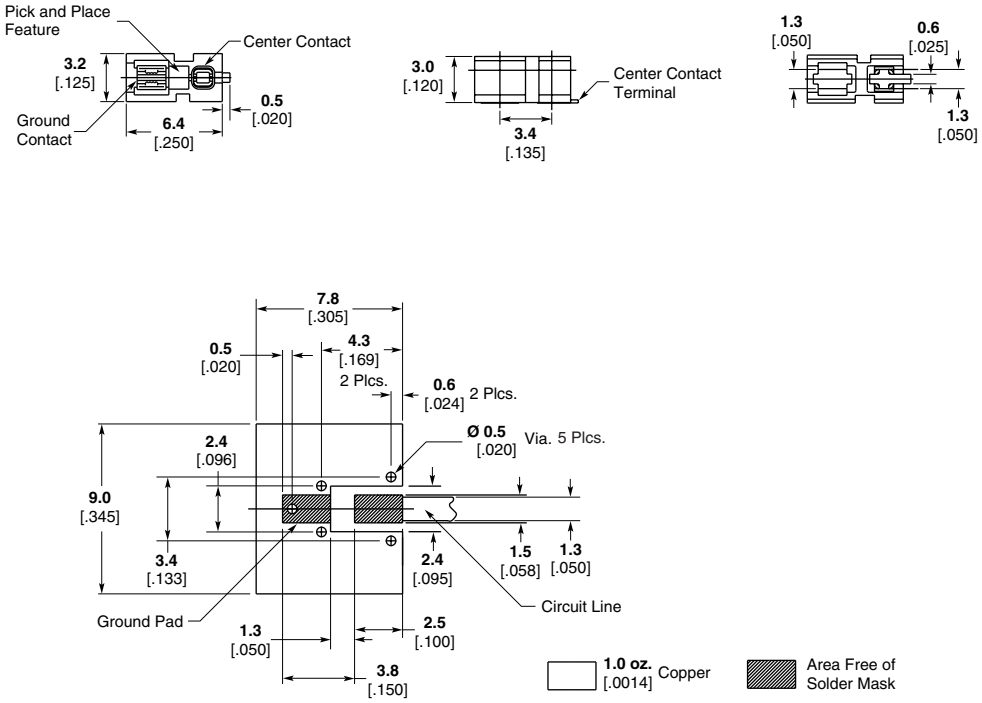

Recommended Mounting Pattern for Microstrip Line

Description	Part No.
Bulk Packaged 100/bag	**1085456-1**
700 Piece Reel	**1086008-1**
2000 Piece Reel	**1086009-1**

1. Printed wiring board material: glass epoxy FR-4 or similar, relative permittivity: 4.8, 1 oz. copper clad both sides.
2. These dimensions valid for 1.6 [.062] board thickness.

Cable Insertion Tool



Part No.
1088313-1

Note: Part Numbers are RoHS compliant except: ♦ Indicates non-RoHS compliant.

Catalog 1307191
Revised 3-07

www.tycoelectronics.com

Dimensions are in millimeters and inches unless otherwise specified. Values in brackets are standard equivalents.

Dimensions are shown for reference purposes only. Specifications subject to change.

USA: 1-800-522-6752
Canada: 1-905-470-4425
Mexico: 01-800-733-8926
C. America: 52-55-1106-0803

South America: 55-11-2103-6000
Hong Kong: 852-2735-1628
Japan: 81-44-844-8013
UK: 44-8706-080-208

SMT/QuickGrip♦ Connectors (Continued)

Inter-Series Cable Assemblies



SMA Straight Plug

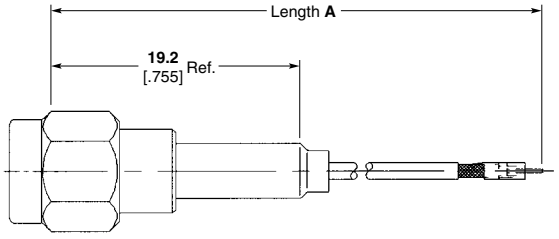

Cable	Assembly Length (A)	Part No.
Omni-Flex 200	100 [4]	**1329174-1**
	200 [8]	**1329174-2**
	305 [12]	**1310432-1**

Note:
1. Cable length tolerances: Length 'A' mm [In], Tolerance mm [In], 50 to 100 [3.94], ± 3 [± .12], 101 to 500 [3.98 to 19.69], ± 5 [± .20], Over 500 [19.69], ± 10 [± .39]

SMA Bulkhead Jack

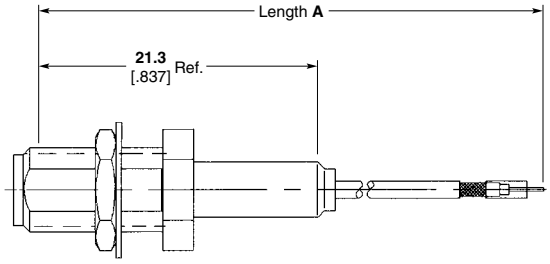

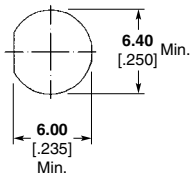

Recommended Mounting Hole

Cable	Assembly Length (A)	Part No.
Omni-Flex 200	100 [4]	**1329175-1**
	200 [8]	**1329175-2**
	305 [12]	**1329175-3**

Note:
1. Cable length tolerances: Length 'A' mm [In], Tolerance mm [In], 50 to 100 [3.94], ± 3 [± .12], 101 to 500 [3.98 to 19.69], ± 5 [± .20], Over 500 [19.69], ± 10 [± .39]

Omni-Flex 200 cable is a Tyco Electronics specified cable.

Note: Part Numbers are RoHS compliant except: ♦ Indicates non-RoHS compliant.

Catalog 1307191
Revised 3-07

www.tycoelectronics.com

Dimensions are in millimeters and inches unless otherwise specified. Values in brackets are standard equivalents.

Dimensions are shown for reference purposes only. Specifications subject to change.

USA: 1-800-522-6752
Canada: 1-905-470-4425
Mexico: 01-800-733-8926
C. America: 52-55-1106-0803

South America: 55-11-2103-6000
Hong Kong: 852-2735-1628
Japan: 81-44-844-8013
UK: 44-8706-080-208

SMT/QuickGrip♦ Connectors (Continued)

Inter-Series Cable Assemblies (Continued)

SMB Bulkhead Jack

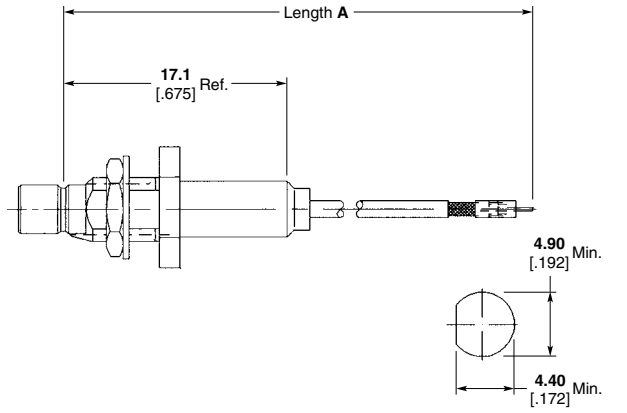

Recommended Mounting Hole

Cable	Assembly Length (A)	Part No.
Omni-Flex 200	100 [4]	1408050-4
	200 [8]	1408050-5
	305 [12]	1408050-6

Note:
1. Cable length tolerances: Length 'A' mm [In], Tolerance mm [In], 50 to 100 [3.94], ± 3 [± .12], 101 to 500 [3.98 to 19.69], ± 5 [± .20], Over 500 [19.69], ± 10 [± .39]

SMB Right-Angle Plug

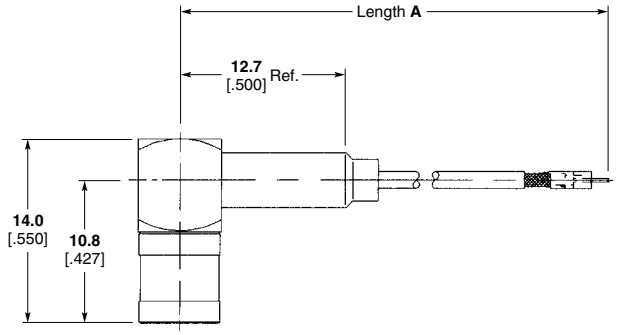

Cable	Assembly Length (A)	Part No.
Omni-Flex 200	100 [4]	1255378-4
	200 [8]	1255378-5
	305 [12]	1255378-6

Note:
1. Cable length tolerances: Length 'A' mm [In], Tolerance mm [In], 50 to 100 [3.94], ± 3 [± .12], 101 to 500 [3.98 to 19.69], ± 5 [± .20], Over 500 [19.69], ± 10 [± .39]

MCX Bulkhead Jack

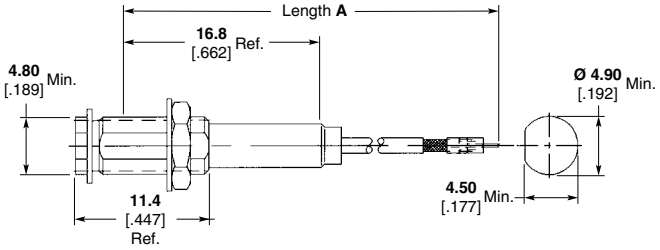

Recommended Mounting Hole

Cable	Assembly Length (A)	Part No.
Omni-Flex 200	100 [4]	1408051-4
	200 [8]	1408051-5
	305 [12]	1408051-6

Note:
1. Cable length tolerances: Length 'A' mm [In], Tolerance mm [In], 50 to 100 [3.94], ± 3 [± .12], 101 to 500 [3.98 to 19.69], ± 5 [± .20], Over 500 [19.69], ± 10 [± .39]

MCX Right-Angle Plug

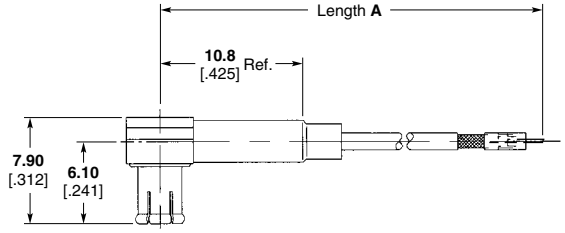

Cable	Assembly Length (A)	Part No.
Omni-Flex 200	100 [4]	1330401-4
	200 [8]	1330401-5
	305 [12]	1330401-6

Note:
1. Cable length tolerances: Length 'A' mm [In], Tolerance mm [In], 50 to 100 [3.94], ± 3 [± .12], 101 to 500 [3.98 to 19.69], ± 5 [± .20], Over 500 [19.69], ± 10 [± .39]

Omni-Flex 200 cable is a Tyco Electronics specified cable.

Note: Part Numbers are RoHS compliant except: ♦ Indicates non-RoHS compliant.

Catalog 1307191
Revised 3-07

www.tycoelectronics.com

Dimensions are in millimeters and inches unless otherwise specified. Values in brackets are standard equivalents.

Dimensions are shown for reference purposes only. Specifications subject to change.

USA: 1-800-522-6752
Canada: 1-905-470-4425
Mexico: 01-800-733-8926
C. America: 52-55-1106-0803

South America: 55-11-2103-6000
Hong Kong: 852-2735-1628
Japan: 81-44-844-8013
UK: 44-8706-080-208

SSMT Surface Mount Interconnect System

Microminiature Surface Mount RF Connectors

Product Facts

- 3.0 [.118] mated height
- Excellent interface retention
- Flexible micro-coax cable
- 360 degree mated rotation
- Tape and Reel packaging available

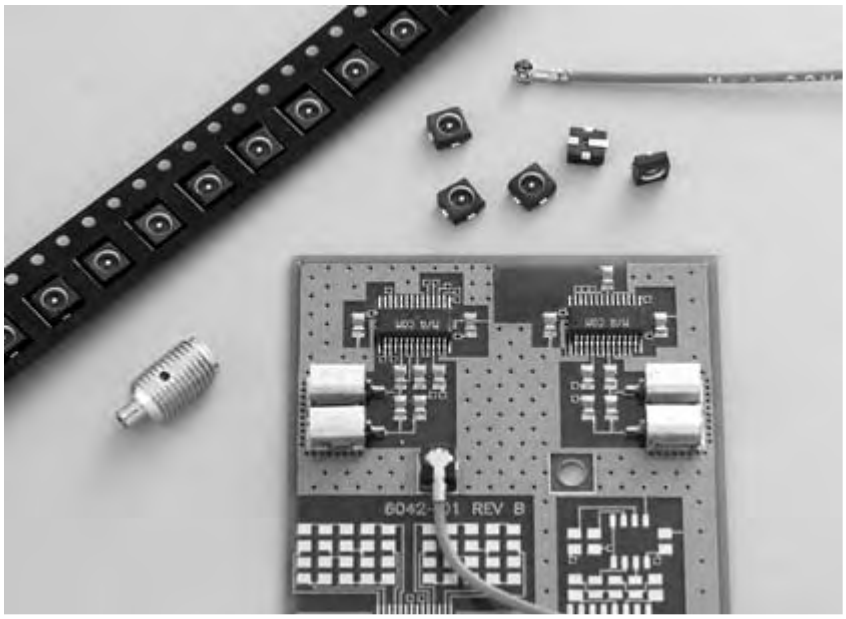

The Tyco Electronics SSMT surface mount Interconnect System is designed to provide superior electrical and mechanical performance for wireless communication applications. The SSMT system occupies less printed circuit board (PCB) real estate than conventional through hole coaxial connectors. An innovative microstrip mounting pattern and plug receptacle design ensure reliable grounding and PCB retention characteristics. The SSMT Interconnect System allows closer pitch/spacing, standing 3.0 [.118] (fully mated height) off the board. The mated SSMT interface allows 360 degrees of rotation providing maximum PCB design flexibility. It has been designed to provide optimal retention for applications where shock, vibration or cable flexure may be encountered. Force to disengage by cable load (cam-out) exceeds 300 grams.

The SSMT system is designed to provide the performance of much larger industry standard connectors. The SSMT Interconnect System consistently achieves broad band electrical performance through 6 GHz with a maximum VSWR of 1.20:1 at 2 GHz. This broad band performance establishes a reliable interface that can be utilized for future system upgrades without concern for performance degradation.

The SSMT utilizes a common plug receptacle, part number 1251802-1, which is designed for high volume assembly using surface mount technology and is available in tape and reel packaging for automatic pick and place board assembly. The mating cable jack is available terminated to a highly flexible micro-coax cable as either a pigtail, jumper or standard interseries connector assembly to meet your needs.

The SSMT Interconnect System can be manually mated, facilitating high volume assembly and eliminating the need for special engagement tooling. The SSMT interface design aligns the center contacts prior to full mating to ensure a robust mechanical engagement. Interface durability is rated at 100 mating cycles.

Catalog 1307191
Revised 3-07

www.tycoelectronics.com

Dimensions are in millimeters and inches unless otherwise specified. Values in brackets are standard equivalents.

Dimensions are shown for reference purposes only. Specifications subject to change.

USA: 1-800-522-6752
Canada: 1-905-470-4425
Mexico: 01-800-733-8926
C. America: 52-55-1106-0803

South America: 55-11-2103-6000
Hong Kong: 852-2735-1628
Japan: 81-44-844-8013
UK: 44-8706-080-208

SSMT Surface Mount Interconnect System (Continued)

Specifications

General		
Materials		
SMT Plug	Housing: Contacts:	Polyphenylene Sulfide (PPS) Copper Alloy
SSMT Cable Jack	Outer Contact: Inner Contact: Dielectric:	Beryllium Copper Beryllium Copper Polypropylene, GF
Finish	Plug and cable jack - Contacts: Gold plate over nickel plate	
Electrical		
Frequency	dc - 6 GHz	
Nominal Impedance	50 Ohms	
Voltage Rating	250 Volts (VRMS Maximum) @ Sea Level	
VSWR (Mated Pair)	1.20:1 Maximum @ 2 GHz 1.40:1 Maximum @ 6 GHz	
Insulation Resistance	5000 Megohms Minimum	
Dielectric Withstanding Voltage	500 Volts (VRMS Minimum) @ Sea Level	
Contact Resistance (Connectors Only)		
Center Contact	15 milliohms Maximum	
Outer Contact	10 milliohms Maximum	
Insertion Loss (Connectors Only)	.15dB Max. @ 6 GHz	
Mechanical		
Connector Durability	100 mating cycles	
Tape/Reel Packaging (Plug)	12mm per EIA-481	
Force to Engage	5.5 lbs. Max. (3.5 lbs. typ.)	
Force to Disengage	(2.0 lbs. typ.) 4.0 lbs. Max. (2.0 lbs. typ.)	
Force to Disengage by Cable Load (camout)	300 Grams Min. (800 Grams typ. initial mate)	
Environmental		
Temperature Rating (Mated Pair)	–40°C (–40°F) to +125°C (257°F)	
Resistance to Solder Heat	Infrared, convection and vapor phase solderable (plug only). Maximum reflow time/temperature not to exceed 260°C for 3 minutes.	
Cable Specifications		
Materials		
Jacket:	FEP (polytetrafluoroethylene)	
Shield:	Silver plated copper wire, 44 AWG, 90% min. coverage	
Dielectric:	PTFE (polytetrafluoroethylene)	
Center Conductor:	Silver plated copper clad steel, 30 AWG	
Minimum Bend Radius	6.35mm (.250 inch)	
Insertion Loss (Cable Only)	0.5 dB/ft., 2.0 dB/m @ 1 GHz 0.9 dB/ft., 3.0 dB/m @ 2 GHz	
Center Conductor Resistance	.25 Ohms per foot average. 819 milliohm/meter Nom.; 250 milliohm/Ft. Nom.	

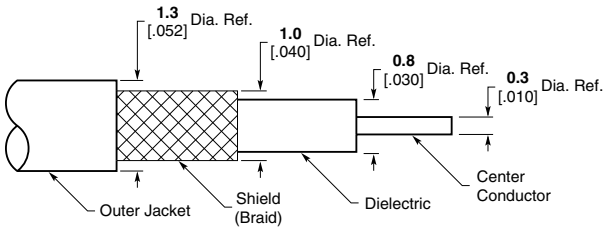

Catalog 1307191
Revised 3-07

www.tycoelectronics.com

Dimensions are in millimeters and inches unless otherwise specified. Values in brackets are standard equivalents.

Dimensions are shown for reference purposes only. Specifications subject to change.

USA: 1-800-522-6752
Canada: 1-905-470-4425
Mexico: 01-800-733-8926
C. America: 52-55-1106-0803

South America: 55-11-2103-6000
Hong Kong: 852-2735-1628
Japan: 81-44-844-8013
UK: 44-8706-080-208

SSMT Surface Mount Interconnect System (Continued)

Straight SMT PCB Mount Plug Receptacle

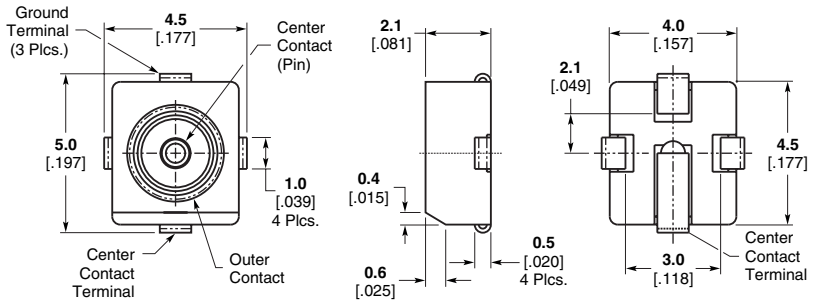

Packaging	Quantity	Part No.
Bulk	Multiple of 100	**1251802-1**
178 7.0 Dia. Taping	800 pcs/reel	**1083946-1**
330 13.3 Dia. Taping	3000 pcs/reel	**1055689-1**

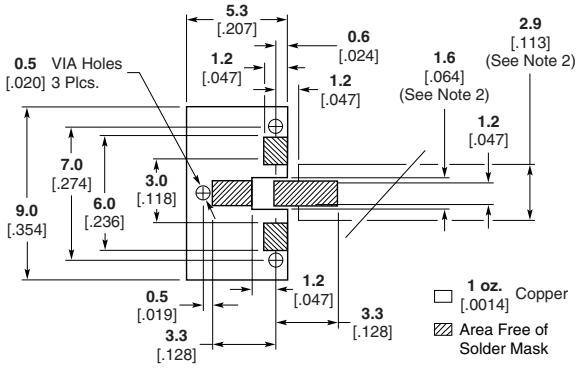

Recommended Mounting Pattern for Microstrip Line

Notes:

1. Printed wiring board material: glass epoxy. FR-4 or similar, relative permittivity: 4.8, 1 oz. copper clad both sides.
2. These dimensions valid for 1.6 [.062] board thickness.

Right-Angle Jack to Jack Cable Assembly

Assembly Length (A)	Part No.
100 [4.0]	**1064524-1**
200 [8.0]	**1064530-1**
305 [12.0]	**1064533-1**

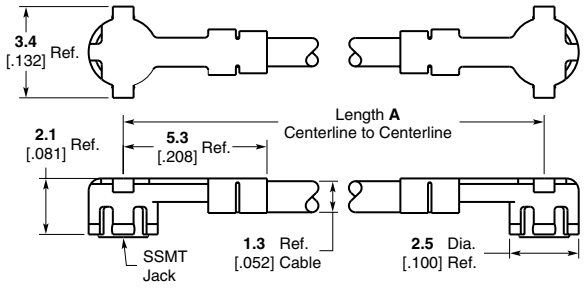

Notes:
1. Consult Tyco Electronics for non-standard cable lengths.
   Length A Tolerances.

Length A	*Tolerance*
50 To 100 [3.94]	± 3 [± .12]
101 To 500 [3.98 to 19.69]	± 5 [± .20]
Over 500 [19.69]	± 10 [± .39]

2. Connector centerlines align ± 30° as shown for lengths of 165 [6.5] or less. Cable assemblies over 165 [6.5] have randomly aligned connectors.

Note: Part Numbers are RoHS compliant except: ♦ Indicates non-RoHS compliant.

Catalog 1307191
Revised 3-07

www.tycoelectronics.com

Dimensions are in millimeters and inches unless otherwise specified. Values in brackets are standard equivalents.

Dimensions are shown for reference purposes only. Specifications subject to change.

USA: 1-800-522-6752
Canada: 1-905-470-4425
Mexico: 01-800-733-8926
C. America: 52-55-1106-0803

South America: 55-11-2103-6000
Hong Kong: 852-2735-1628
Japan: 81-44-844-8013
UK: 44-8706-080-208

SSMT Surface Mount Interconnect System (Continued)

Right-Angle Jack to Jack Cable Assembly (180° Offset)

Assembly Length (A)	Part No.
100 [4.0]	**1082845-1**

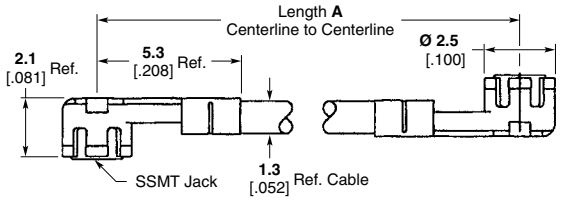

Notes:
1. Consult Tyco Electronics for non-standard cable lengths.
   Cable length tolerance:
   Length A Tolerances.

Length A	*Tolerance*
50 To 100 [3.94]	± 3 [± .12]
101 To 500 [3.98 to 19.69]	± 5 [± .20]
Over 500 [19.69]	± 10 [± .39]

2. To avoid damaging the cable, minimize time at temperature while soldering and/or applying heat to unterminated end of cable.

Right-Angle Jack Cable Pigtail

Assembly Length (A)	Part No.
100 [4.0]	**1064535-1**
200 [8.0]	**1064538-1**
305 [12.0]	**1064540-1**
510 [20.0]	**1064542-1**

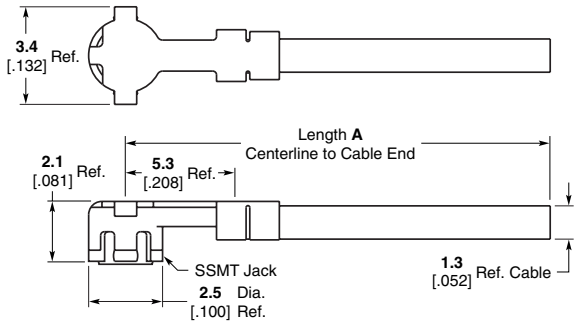

Notes:
1. Consult Tyco Electronics for non-standard cable lengths.
   Cable length tolerance:
   Length A Tolerances.

Length A	*Tolerance*
50 To 100 [3.94]	± 3 [± .12]
101 To 500 [3.98 to 19.69]	± 5 [± .20]
Over 500 [19.69]	± 10 [± .39]

2. To avoid damaging the cable, minimize time at temperature while soldering and/or applying heat to unterminated end of cable.

Note: Part Numbers are RoHS compliant except: ♦ Indicates non-RoHS compliant.

Catalog 1307191
Revised 3-07

www.tycoelectronics.com

Dimensions are in millimeters and inches unless otherwise specified. Values in brackets are standard equivalents.

Dimensions are shown for reference purposes only. Specifications subject to change.

USA: 1-800-522-6752
Canada: 1-905-470-4425
Mexico: 01-800-733-8926
C. America: 52-55-1106-0803

South America: 55-11-2103-6000
Hong Kong: 852-2735-1628
Japan: 81-44-844-8013
UK: 44-8706-080-208

SSMT Surface Mount Interconnect System (Continued)

Inter-Series Cable Assemblies



Notes:
1. Consult Tyco Electronics for non-standard cable lengths:
   Length A Tolerances.

Length A	*Tolerance*
50 To 100 (3.94)	± 3 (± .12)
101 To 500 (3.98 to 19.69)	± 5 (± .20)
Over 500 (19.69)	± 10 (± .39)

2. Connectors are randomly aligned unless otherwise noted.

SMA Straight Plug

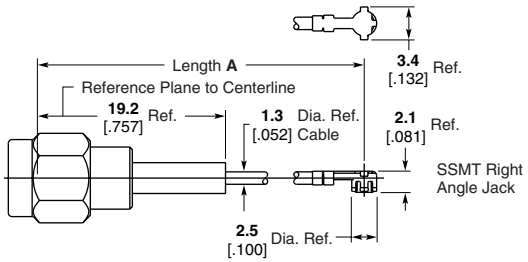

Assembly Length (A)	Part No.
100 [4.0]	**1064543-1**
200 [8.0]	**1064552-1**
305 [12.0]	**1064560-1**

Note:
1064552-1 recommended for customer system verification.

SMA Bulkhead Jack

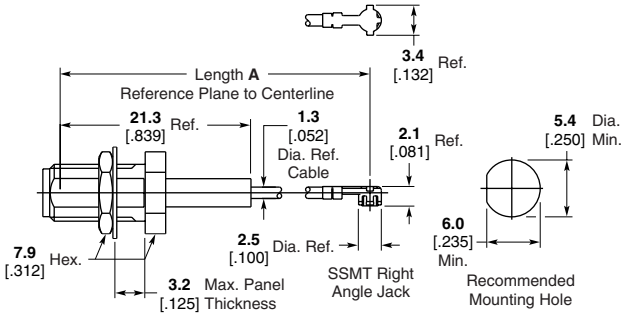

Assembly Length (A)	Part No.
100 [4.0]	**1064544-1**
200 [8.0]	**1064553-1**
305 [12.0]	**1064561-1**

SMB Bulkhead Jack

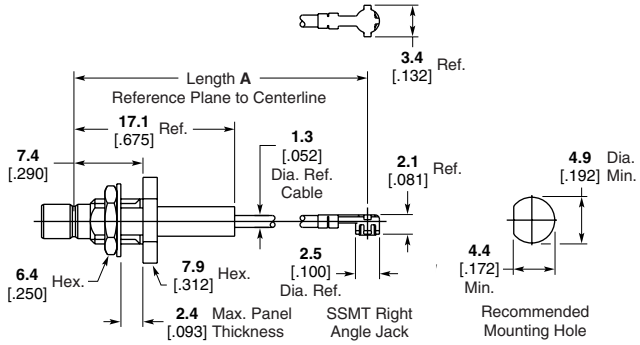

Assembly Length (A)	Part No.
100 [4.0]	**1064546-1**
200 [8.0]	**1064555-1**
305 [12.0]	**1064563-1**

Note: Part Numbers are RoHS compliant except: ♦ Indicates non-RoHS compliant.

Catalog 1307191
Revised 3-07

www.tycoelectronics.com

Dimensions are in millimeters and inches unless otherwise specified. Values in brackets are standard equivalents.

Dimensions are shown for reference purposes only. Specifications subject to change.

USA: 1-800-522-6752
Canada: 1-905-470-4425
Mexico: 01-800-733-8926
C. America: 52-55-1106-0803

South America: 55-11-2103-6000
Hong Kong: 852-2735-1628
Japan: 81-44-844-8013
UK: 44-8706-080-208

SSMT Surface Mount Interconnect System (Continued)

Inter-Series Cable Assemblies (Continued)

MCX Bulkhead Jack

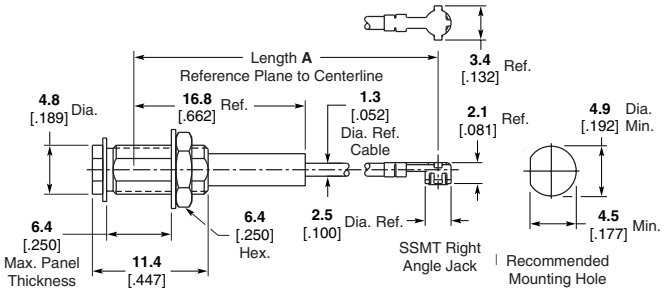

Assembly Length (A)	Part No.
100 [4.0]	**1064549-1**
200 [8.0]	**1064558-1**
305 [12.0]	**1064566-1**

MCX Right-Angle Plug

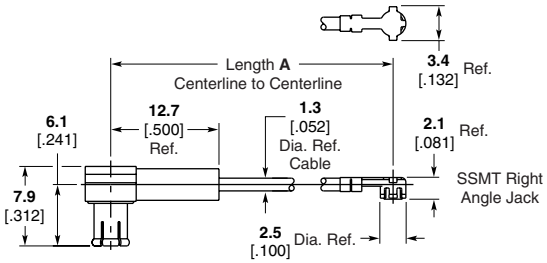

Assembly Length (A)	Part No.
100 [4.0]	**1064550-1**
200 [8.0]	**1064559-1**
305 [12.0]	**1064567-1**

SSMT Disengagement Tool

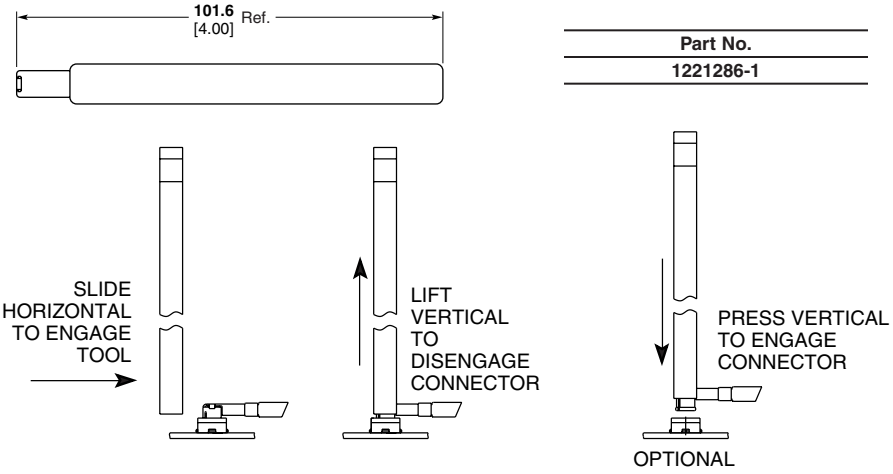

Part No.
1221286-1

Use of Engagement/Disengagement Tool

Note: The SSMT disengagement tool can be utilized as an optional engagement tool versus manual hand installation.

SSMT to SMA Between Series Adapters

SSMT Plug to SMA Jack Adapter

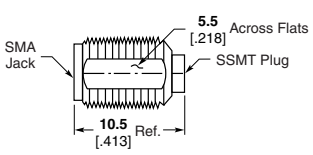

Part No. 1055696-1

SSMT Plug to SMA Plug Adapter

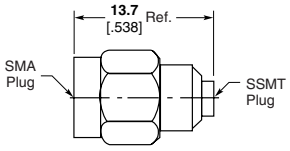

Part No. 1055695-1

SSMT Jack to SMA Jack Adapter

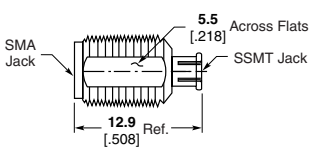

Part No. 1055694-1

SSMT Jack to SMA Plug

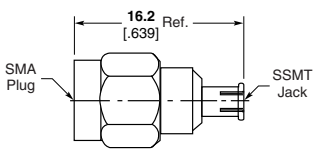

Part No. 1055697-1

Note: Part Numbers are RoHS compliant except: ♦ Indicates non-RoHS compliant.

Catalog 1307191
Revised 3-07

www.tycoelectronics.com

Dimensions are in millimeters and inches unless otherwise specified. Values in brackets are standard equivalents.

Dimensions are shown for reference purposes only. Specifications subject to change.

USA: 1-800-522-6752
Canada: 1-905-470-4425
Mexico: 01-800-733-8926
C. America: 52-55-1106-0803

South America: 55-11-2103-6000
Hong Kong: 852-2735-1628
Japan: 81-44-844-8013
UK: 44-8706-080-208

MMCX Microminiature Snap-On Connector Series

Product Facts

- **Snap-on interface facilitates assembly**
- **35% smaller than MCX Series**
- **Designed for space saving applications up to 6 GHz**
- **Conforms to CECC Specifications**
- **Surface mount tape and reel for high volume**



Tyco Electronics' microminiature snap-on connectors offer an excellent blend of size, durability and performance for emerging applications in GPS, PCS, automotive and wireless communications. An extension of the popular MCX series, MMCX connectors are 35% smaller, offering even greater packaging density and weight reduction. MMCX connectors are rated to 500 mating cycles. The snap-on interface facilitates assembly, eliminating the need for a threaded connection, and ensuring full engagement. The forces to engage and disengage have been optimized to ensure ease of mating as well as to prevent damage to PCB solder connections. MMCX connectors are designed for broadband performance, DC-6 GHz, and can be utilized for future system upgrades without concerns for performance degradation. The non-slotted outer contact provides for minimal RF leakage. MMCX surface mount connectors are designed to withstand infrared reflow, convection and vapor phase soldering.

Tyco Electronics MMCX connectors are fully mateable with competitive MMCX product and conforms to the CECC interface specifications. They are available in a broad range of standard configurations, including PCB and panel mount, flexible and semi-rigid cable. Tape and reel packaging is available on surface mount product to facilitate high volume manufacturing. Other options can be reviewed as well, including additional cable sizes, and adapters.

The MMCX connector series is a cost effective solution for the challenging demands of today's commercial marketplace. It offers one of the smallest conventional crimp terminations without special tooling. Call your local sales office or authorized distributor for additional information or samples of the MMCX connector series.

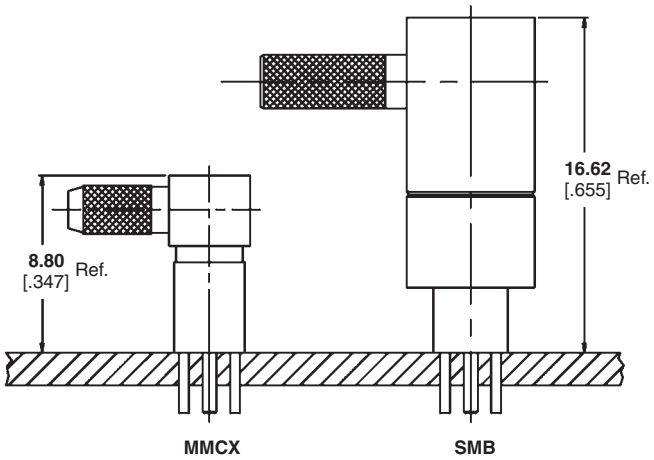

Material and Finish

Shells — Brass

Bodies — Brass , plated gold

Center Contacts —
(Male) — Brass, plated gold
(Female) — Beryllium Copper, plated gold

Dielectrics — PTFE

Electrical Characteristics in accordance with CECC 22000

Frequency — dc – 6 GHz

Nominal Impedance — 50 ohms

Voltage Rating — 170 Volts (VRMS Max.) @ Sea Level

VSWR — 1.25 : 1 Max. @ 6 GHz

Insulation Resistance — 1,000 Megohms Min.

Dielectric Withstanding Voltage — 500 Volts (VRMS Max.) @ Sea Level

RF Leakage — -60 dB Min. @ 2.5 GHz

Contact Resistance —
Center Contact — 5 milliohms max.
Outer Contact — 1 milliohm max.

Mechanical Characteristics in accordance with CECC 22000

Connector Durability — 500 mating cycles

Force to Engage — 18 Newtons Max.

Force to Disengage — 6 Newtons Max.

Center Contact Retention — 10 Newtons Min.

Cable Retention —
Axial — 45 Newtons Min.
Rotational — 0.05 N-m Min.

Environmental Characteristics in accordance with CECC 22000, Equivalent Test Conditions

Temperature Rating — –55 to +155°C

Vibration — MIL-STD-202, Method 204, Condition B

Shock — MIL-STD-202, Method 213, Condition A

Moisture Resistance — MIL-STD-202, Method 106

Thermal Shock — MIL-STD-202, Method 107, Condition B

Note: Performance specifications are typical, but may not apply to all connector types.

Related Product Data

Product Specification — 108-2084

Sample Kit — 1654779

Catalog 1307191
Revised 3-07

www.tycoelectronics.com

Dimensions are in millimeters and inches unless otherwise specified. Values in brackets are standard equivalents.

Dimensions are shown for reference purposes only. Specifications subject to change.

USA: 1-800-522-6752
Canada: 1-905-470-4425
Mexico: 01-800-733-8926
C. America: 52-55-1106-0803

South America: 55-11-2103-6000
Hong Kong: 852-2735-1628
Japan: 81-44-844-8013
UK: 44-8706-080-208

MMCX Microminiature Snap-On Connector Series (Continued)

MMCX Interface Dimensions

Plug

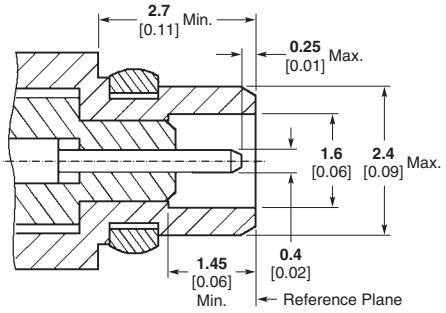

Jack

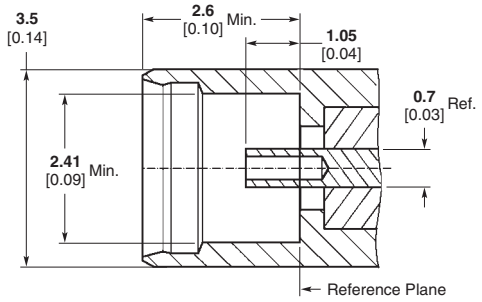

Semi-Rigid Cable – Direct Solder Attachment

Straight Cable Plug

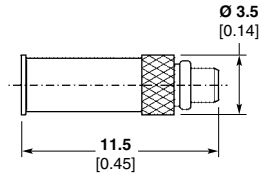

Cable	Part No.
RG 405	**1408313-1**

Right-Angle Cable Plug

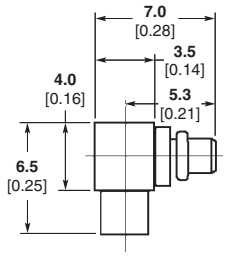

Cable	Part No.
RG 405	**1408314-1**

Flexible Cable – Crimp Attachment

Straight Cable Plugs

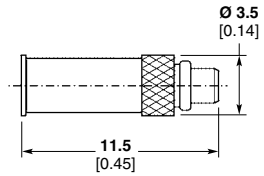

Cable	Part No.
RG 178, 196	**1408148-1**

Captured Center Contact

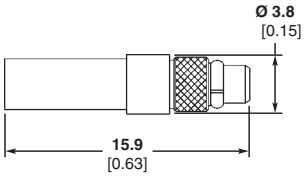

Cable	Part No.
RG 174, 188, 316	**1408312-1**
RD 316	**1408312-2**

Captured Center Contact

Right-Angle Cable Plug

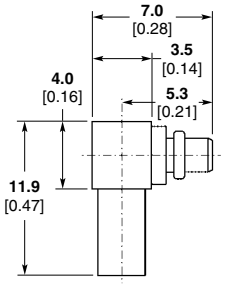

Cable	Part No.
RG 178, 196	**1408149-1**
RG 174, 188, 316	**1408149-2**
RD 316	**1408149-3**

Captured Center Contact

Note: Part Numbers are RoHS compliant except: ♦ Indicates non-RoHS compliant.

Catalog 1307191
Revised 3-07

www.tycoelectronics.com

Dimensions are in millimeters and inches unless otherwise specified. Values in brackets are standard equivalents.

Dimensions are shown for reference purposes only. Specifications subject to change.

USA: 1-800-522-6752
Canada: 1-905-470-4425
Mexico: 01-800-733-8926
C. America: 52-55-1106-0803

South America: 55-11-2103-6000
Hong Kong: 852-2735-1628
Japan: 81-44-844-8013
UK: 44-8706-080-208

MMCX Microminiature Snap-On Connector Series (Continued)

Printed Circuit Board

Straight Jack Receptacle

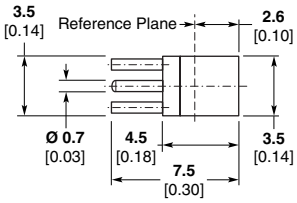

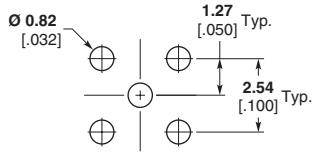

Recommended Mounting Holes

Part No.
1408150-1

Right-Angle Jack Receptacle

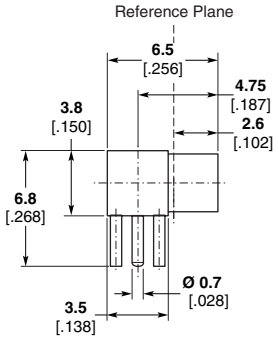

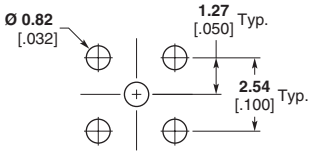

Recommended Mounting Holes

Part No.
1408151-1

Straight Plug Receptacle

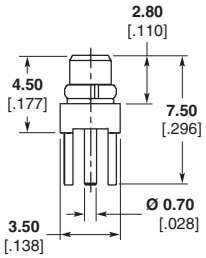

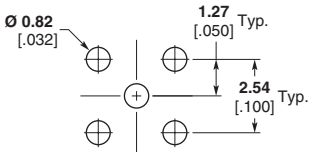

Recommended Mounting Holes

Part No.
1408496-1

Surface Mount

Straight Jack Receptacle

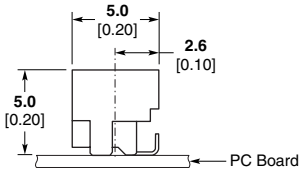

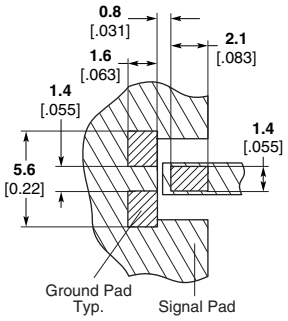

Recommended Mounting Pattern

Part No.
1393757-6

Right-Angle Jack Receptacle

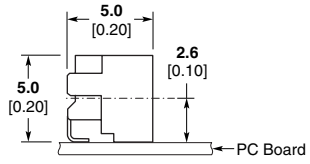

Part No.
1393757-7

Note: Part Numbers are RoHS compliant except: ♦ Indicates non-RoHS compliant.

Catalog 1307191
Revised 3-07

www.tycoelectronics.com

Dimensions are in millimeters and inches unless otherwise specified. Values in brackets are standard equivalents.

Dimensions are shown for reference purposes only. Specifications subject to change.

USA: 1-800-522-6752
Canada: 1-905-470-4425
Mexico: 01-800-733-8926
C. America: 52-55-1106-0803

South America: 55-11-2103-6000
Hong Kong: 852-2735-1628
Japan: 81-44-844-8013
UK: 44-8706-080-208

MMCX Microminiature Snap-On Connector Series (Continued)

Edge Mount

Straight Jack Receptacle

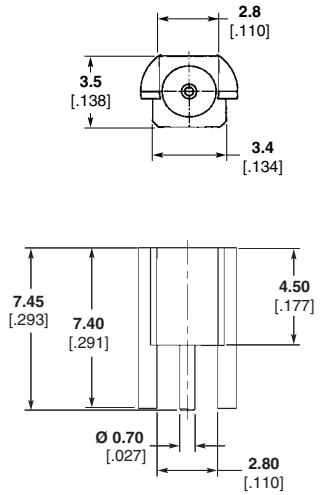

Solder Pad Configuration Only

Part No.
1408152-1

Straight Plug Receptacle

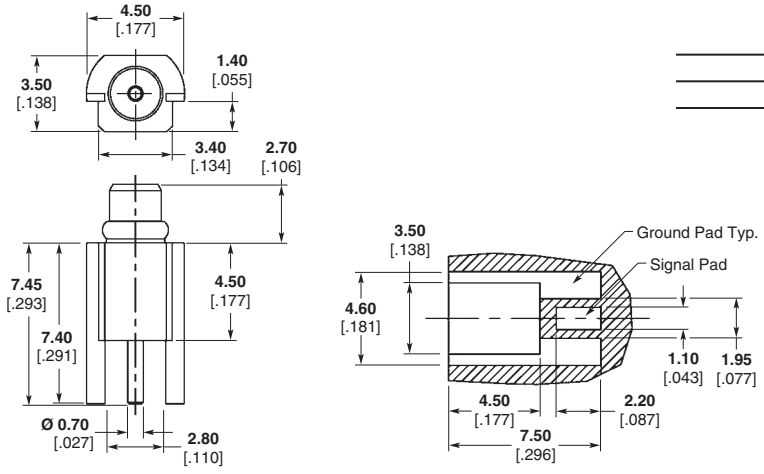

Solder Pad Configuration Only

Part No.
1408120-1

Note: Part Numbers are RoHS compliant except: ♦ Indicates non-RoHS compliant.

Catalog 1307191
Revised 3-07

www.tycoelectronics.com

Dimensions are in millimeters and inches unless otherwise specified. Values in brackets are standard equivalents.

Dimensions are shown for reference purposes only. Specifications subject to change.

USA: 1-800-522-6752
Canada: 1-905-470-4425
Mexico: 01-800-733-8926
C. America: 52-55-1106-0803

South America: 55-11-2103-6000
Hong Kong: 852-2735-1628
Japan: 81-44-844-8013
UK: 44-8706-080-208

UMCC — Ultraminiature Coax Connector and Cable Assembly Series

Product Facts

- **Ultra low profile (2.0 mm or 2.5 mm maximum mated height)**
- **Easy snap on/off mating**
- **Small footprint on PCB (3 mm x 3 mm)**
- **Excellent performance to 6 GHz**
- **Surface mount and reflow solderable**
- **Available on 0.80 mm and 1.37 mm dia. single shield, and 1.32 mm dia. double shield cable**
- **Style A receptacles mate with HIROSE U.FL/U.FL(v) Series connectors**
- **Style B receptacles mate with MURATA GSC Series connectors**

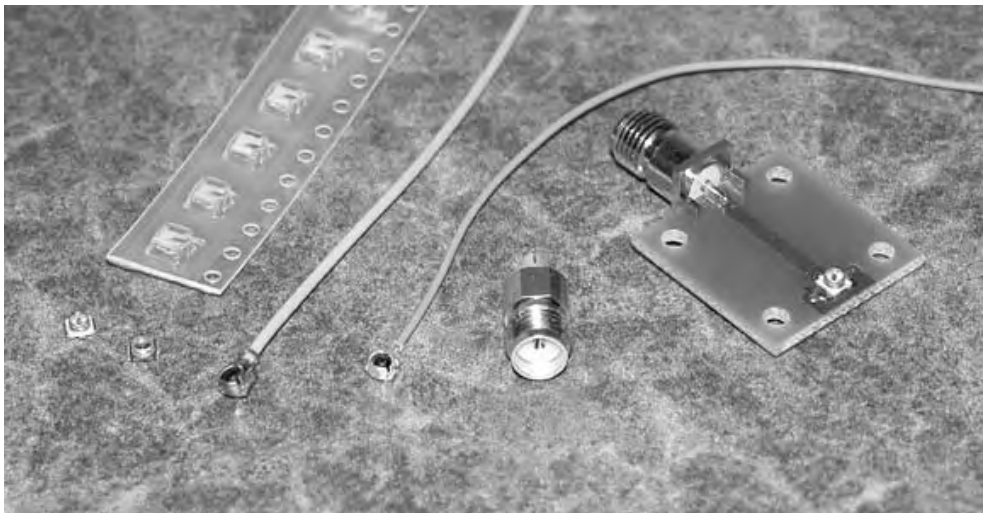

Description

- Extremely low profile
- Surface mount technology
- 360° mated rotation
- Excellent price-to-performance ratio

Applications

- Wireless LAN, Mini PCI
- Mobile Antenna/GPS/ Radio Systems
- PDA/PCS/Cellular Handset applications
- Wireless Communications systems (LAN, GSM, PCS, WCDMA, UMTS)
- Remote measuring equipment

Electrical Characteristics

Characteristic Impedance — 50 Ohms

Frequency Range — DC to 6 GHz

VSWR (mated pair) —
1.30 max. DC to 3 GHz
1.40 max. 3 to 6 GHz (cable dependent)

Insertion Loss (connectors only) —
0.24 dB max. DC to 6 GHz

Rated Voltage —
60 VAC (rms) — standard receptacle (Styles A, B)

Dielectric Withstanding Voltage —
200 VAC, 50 Hz for 1 min. @ sea level

Insulation Resistance —
500 Megohms min.

Contact Resistance (connectors only) —
20 milliohms max. (Center)
10 milliohms max. (Outer, Plug)
10 milliohms max. (Outer, Receptacle)

Mechanical and Environmental Characteristics

Durability —
30 cycles — standard receptacle (Styles A, B)

Disengagement Force —
2N min. perpendicular
4N min. orthogonal

Center Contact Retention Force —
0.15N min.

Tape/Reel Packaging (receptacle) —
12 mm carrier per EIA-481

Operating Temperature —
–40°C to +90°C

Material and Finish

Shell — Phosphor bronze, plated gold or silver

Male Center Contact — Brass or phosphor bronze, plated gold

Female Center Contact — Brass or phosphor bronze, plated gold

Insulator (Plug) — PBT (15% G.F.), black, UL94V-0

Insulator (Receptacle) — LCP, beige or black, UL94V-0

Related Product Data

Product Specification — 108-2231

Sample Kit — 1-1773441-6

HIROSE is a trademark of Hirose Electric.
MURATA is a trademark of Murata Electronics, Inc.

Catalog 1307191
Revised 3-07

www.tycoelectronics.com

Dimensions are in millimeters and inches unless otherwise specified. Values in brackets are standard equivalents.

Dimensions are shown for reference purposes only. Specifications subject to change.

USA: 1-800-522-6752
Canada: 1-905-470-4425
Mexico: 01-800-733-8926
C. America: 52-55-1106-0803

South America: 55-11-2103-6000
Hong Kong: 852-2735-1628
Japan: 81-44-844-8013
UK: 44-8706-080-208

UMCC — Ultraminiature Coax Connector and Cable Assembly Series (Continued)

Cable Information

Material and Finish

Center Conductor —
0.8 mm Dia. — Silver plated copper
1.32 mm Dia. — Silver plated copper
1.37 mm Dia. — Silver plated copper

Center Conductor Size —
0.8 mm Dia. — Stranded 7/0.05 mm
1.32 mm Dia. — Stranded 7/0.08 mm
1.37 mm Dia. — Stranded 7/0.10 mm

Dielectric —
0.8 mm Dia. — FEP or PFA
1.32 mm Dia. — FEP
1.37 mm Dia. — FEP

Dielectric Size —
0.8 mm Dia. — 0.4 mm OD
1.32 mm Dia. — 0.66 mm OD
1.37 mm Dia. — 0.83 mm OD

Shield —
0.8 mm Dia. — Silver plated copper braid
1.32 mm Dia. — Double SPL braid
1.37 mm Dia. — Silver plated copper braid

Shield Coverage —
0.8 mm Dia. — > 90%
1.32 mm Dia. — > 90% (each braid layer)
1.37 mm Dia. — > 90%

Jacket —
0.8 mm Dia. — FEP or PFA
1.32 mm Dia. — FEP
1.37 mm Dia. — FEP

Jacket Size —
0.8 mm Dia. — 0.80 mm OD
1.32 mm Dia. — 1.32 mm OD
1.37 mm Dia. — 1.37 mm OD

Mechanical Characteristics

Minimum Bend Radius —
0.8 mm Dia. — 5 mm single bend, 30 mm continuous flexing
1.32 mm Dia. — 5 mm single bend, 30 mm continuous flexing
1.37 mm Dia. — 5 mm single bend, 30 mm continuous flexing

Electrical Characteristics

Impedance (Ohms) —
0.8 mm Dia. — 50 ± 2
1.32 mm Dia. — 50 ± 2
1.37 mm Dia. — 50 ± 2

Velocity of Propagation —
0.8 mm Dia. — 70%
1.32 mm Dia. — 70%
1.37 mm Dia. — 70%

CC Resistance (Ohms/KM) —
0.8 mm Dia. — 1450
1.32 mm Dia. — 560
1.37 mm Dia. — 354

Voltage Rating —
0.8 mm Dia. — 60 VAC
1.32 mm Dia. — 60 VAC
1.37 mm Dia. — 60 VAC

Attenuation — See chart

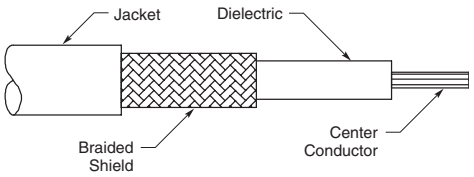

UMCC Cable Attenuation

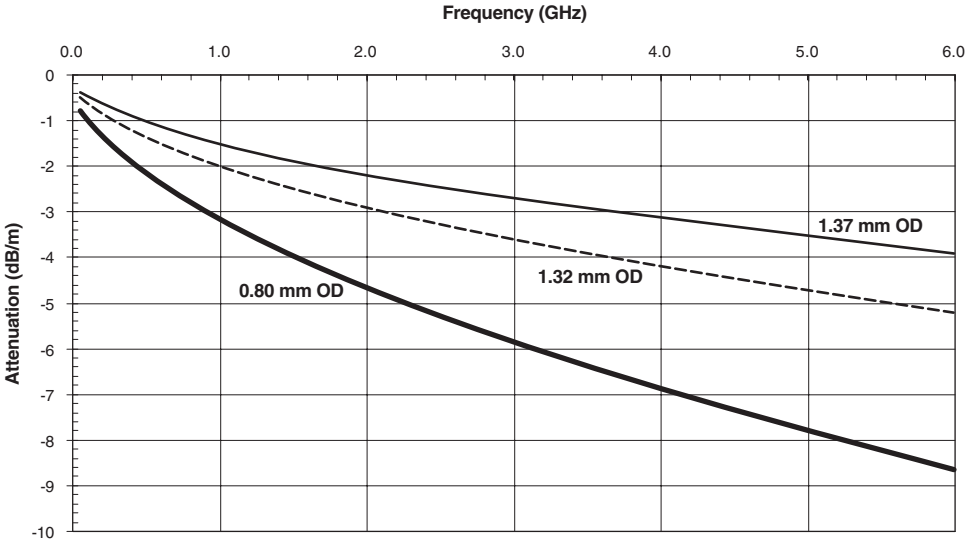

Catalog 1307191
Revised 3-07

www.tycoelectronics.com

Dimensions are in millimeters and inches unless otherwise specified. Values in brackets are standard equivalents.

Dimensions are shown for reference purposes only. Specifications subject to change.

USA: 1-800-522-6752
Canada: 1-905-470-4425
Mexico: 01-800-733-8926
C. America: 52-55-1106-0803

South America: 55-11-2103-6000
Hong Kong: 852-2735-1628
Japan: 81-44-844-8013
UK: 44-8706-080-208

UMCC — Ultraminiature Coax Connector and Cable Assembly Series (Continued)

PCB Receptacles — Style A



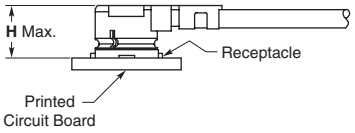

Style	Mates with UMCC Connector Type	Mated Height (H)	Description	Part Number
A	II / III	**2.00–2.50** .079–.098	UMCC PCB Receptacle, 2500 Pc Reel	**1566230-1**
A	II / III	**2.00–2.50** .079–.098	UMCC PCB Receptacle, 500 Pc Bag	**1566230-2**

UMCC PCB Receptacle

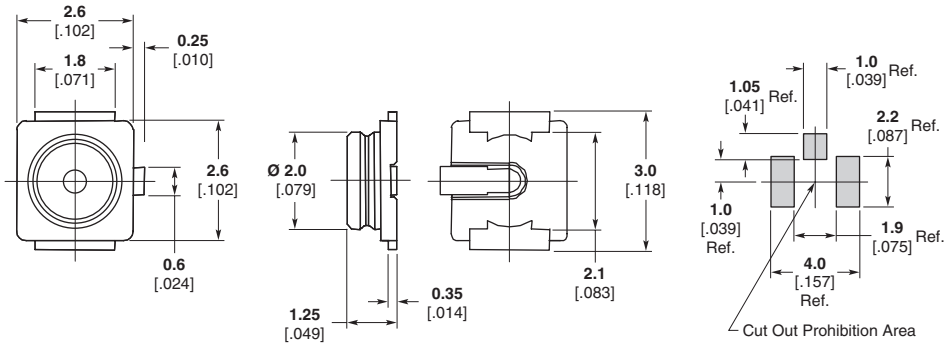

Recommended PC Board Layout

PCB Receptacles — Style B



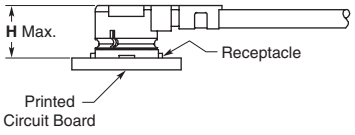

Style	Mates with UMCC Connector Type	Mated Height (H)	Description	Part Number
B	I	**2.00** .079	UMCC PCB Receptacle, 2500 Pc Reel	**1775146-1**
B	I	**2.00** .079	UMCC PCB Receptacle, 500 Pc Bag	**1775146-2**

UMCC PCB Receptacle

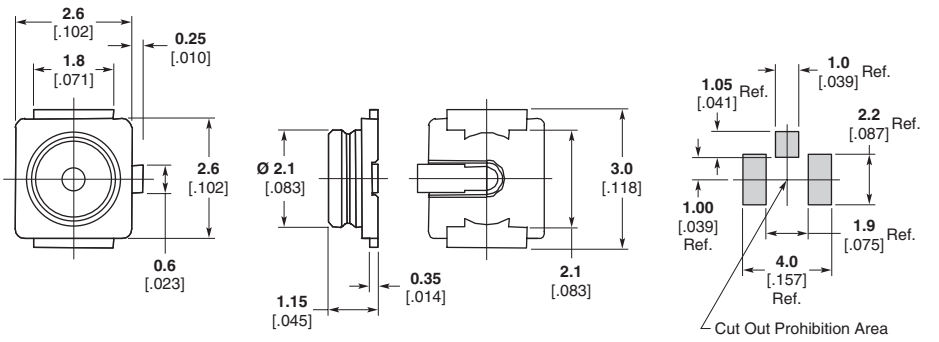

Recommended PC Board Layout

Note: Part Numbers are RoHS compliant except: ♦ Indicates non-RoHS compliant.

Catalog 1307191
Revised 3-07

www.tycoelectronics.com

Dimensions are in millimeters and inches unless otherwise specified. Values in brackets are standard equivalents.

Dimensions are shown for reference purposes only. Specifications subject to change.

USA: 1-800-522-6752
Canada: 1-905-470-4425
Mexico: 01-800-733-8926
C. America: 52-55-1106-0803

South America: 55-11-2103-6000
Hong Kong: 852-2735-1628
Japan: 81-44-844-8013
UK: 44-8706-080-208

UMCC — Ultraminiature Coax Connector and Cable Assembly Series (Continued)

Standard Double Ended Cable Assemblies



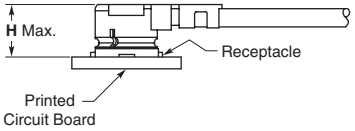

UMCC Connector Type	Mated Height (H)	Cable Dia.	Length L	Mates with PCB Rcpt.	Part Number
I	**2.00** .079	**0.80** .031	**100.00** 3.937	Style B	**1750109-1**
	2.00 .079	**0.80** .031	**200.00** 7.874	Style B	**1750109-2**
II	**2.00** .079	**0.80** .031	**100.00** 3.937	Style A	**1750108-1**
	2.00 .079	**0.80** .031	**200.00** 7.874	Style A	**1750108-2**
III	**2.50** .098	**0.80** .031	**100.00** 3.937	Style A	**1750107-1**
	2.50 .098	**0.80** .031	**200.00** 7.874	Style A	**1750107-2**
	2.50 .098	**1.32** .052	**100.00** 3.937	Style A	**1750107-3**
	2.50 .098	**1.32** .052	**200.00** 7.874	Style A	**1750107-4**
	2.50 .098	**1.37** .054	**100.00** 3.937	Style A	**1750107-5**
	2.50 .098	**1.37** .054	**200.00** 7.874	Style A	**1750107-6**

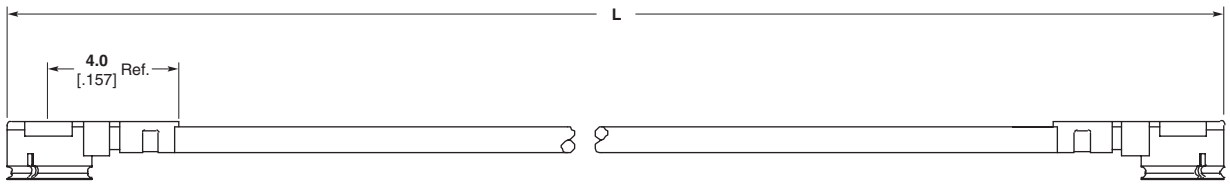

Note: Part Numbers are RoHS compliant except: ♦ Indicates non-RoHS compliant.

Catalog 1307191
Revised 3-07

www.tycoelectronics.com

Dimensions are in millimeters and inches unless otherwise specified. Values in brackets are standard equivalents.

Dimensions are shown for reference purposes only. Specifications subject to change.

USA: 1-800-522-6752
Canada: 1-905-470-4425
Mexico: 01-800-733-8926
C. America: 52-55-1106-0803

South America: 55-11-2103-6000
Hong Kong: 852-2735-1628
Japan: 81-44-844-8013
UK: 44-8706-080-208

UMCC — Ultraminiature Coax Connector and Cable Assembly Series (Continued)

Interseries Cable Assemblies



UMCC Connector Type	Mated Height (H)	Cable Dia.	Length	Description	Part Number
III	**2.50** .098	**1.37** .054	**200.00** 7.874	UMCC Plug to FME Plug	**1750110-2**
	2.50 .098	**1.37** .054	**200.00** 7.874	UMCC Plug to SMA Plug	**1750110-4**
	2.50 .098	**1.37** .054	**200.00** 7.874	UMCC Plug to SMA Bulkhead Jack	**1750110-6**
	2.50 .098	**1.37** .054	**200.00** 7.874	UMCC Plug to MCX Right-Angle Plug	**1750110-8**
	2.50 .098	**1.37** .054	**200.00** 7.874	UMCC Plug to MMCX Right-Angle Plug	**1-1750110-0**
II	**2.00** .079	**0.80** .031	**200.00** 7.874	UMCC Plug to MCX Right-Angle Plug	**1750110-7**
	2.00 .079	**0.80** .031	**200.00** 7.874	UMCC Plug to MMCX Right-Angle Plug	**1750110-9**

UMCC to FME Plug

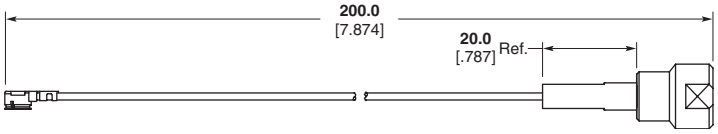

UMCC to SMA Plug

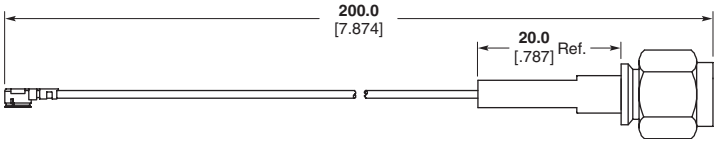

UMCC to SMA Bulkhead Jack

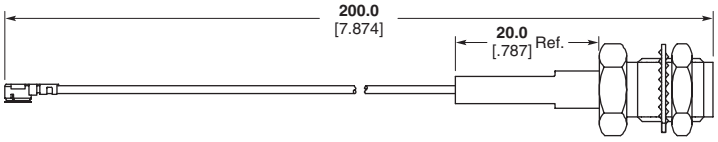

UMCC to MCX Right-Angle Plug

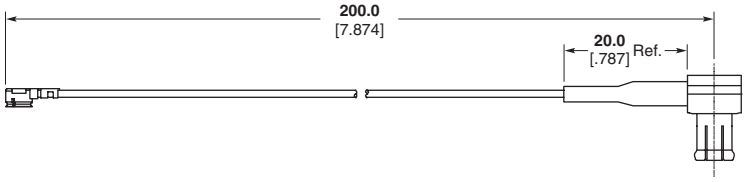

UMCC to MMCX Right-Angle Plug

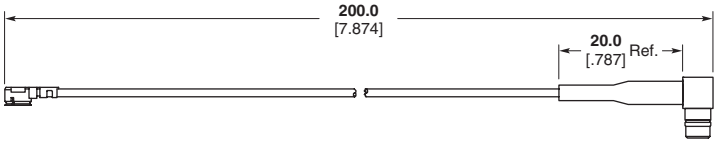

Note: Part Numbers are RoHS compliant except: ♦ Indicates non-RoHS compliant.

Catalog 1307191
Revised 3-07

www.tycoelectronics.com

Dimensions are in millimeters and inches unless otherwise specified. Values in brackets are standard equivalents.

Dimensions are shown for reference purposes only. Specifications subject to change.

USA: 1-800-522-6752
Canada: 1-905-470-4425
Mexico: 01-800-733-8926
C. America: 52-55-1106-0803

South America: 55-11-2103-6000
Hong Kong: 852-2735-1628
Japan: 81-44-844-8013
UK: 44-8706-080-208

UMCC — Ultraminiature Coax Connector and Cable Assembly Series (Continued)

Adapters



UMCC Connector Type	Description	Part Number
I	UMCC Jack Receptacle to SMA Plug	**1775228-1**
	UMCC Plug to SMA Jack	**1775229-1**
II / III	UMCC Jack Receptacle to SMA Plug	**1775227-1**
	UMCC Plug to SMA Jack	**1775230-1**

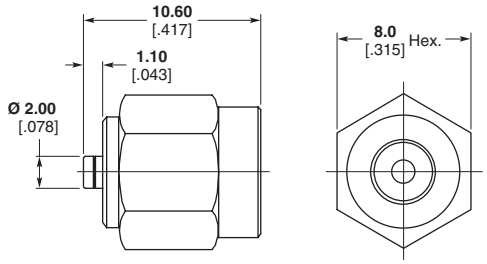

Part Number 1775228-1

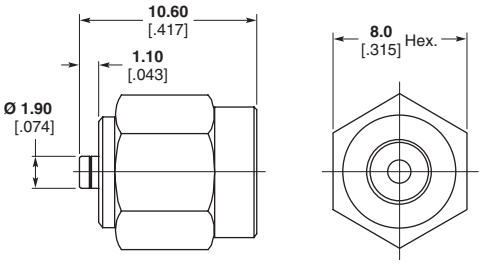

Part Number 1775227-1

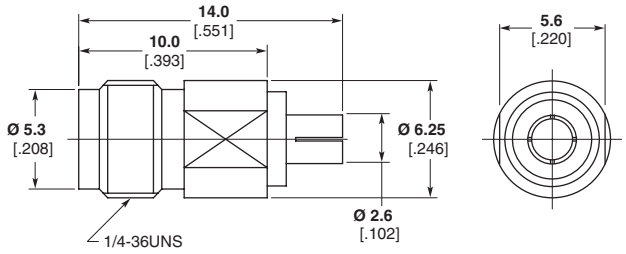

Part Number 1775229-1

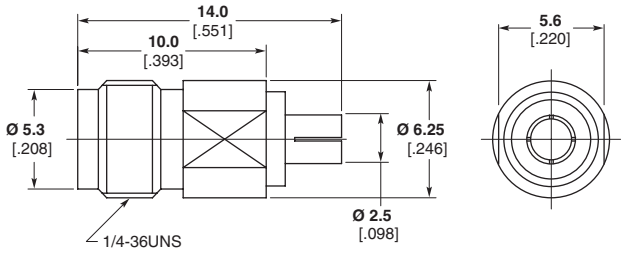

Part Number 1775230-1

Extraction Tool
Part Number 1775231-1



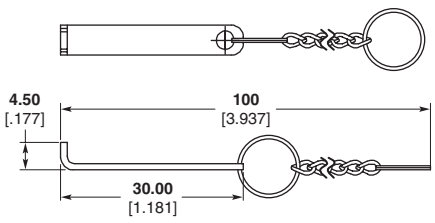

Note: Part Numbers are RoHS compliant except: ♦ Indicates non-RoHS compliant.

Catalog 1307191
Revised 3-07

www.tycoelectronics.com

Dimensions are in millimeters and inches unless otherwise specified. Values in brackets are standard equivalents.

Dimensions are shown for reference purposes only. Specifications subject to change.

USA: 1-800-522-6752
Canada: 1-905-470-4425
Mexico: 01-800-733-8926
C. America: 52-55-1106-0803

South America: 55-11-2103-6000
Hong Kong: 852-2735-1628
Japan: 81-44-844-8013
UK: 44-8706-080-208

UMCC — Ultraminiature Coax Connector and Cable Assembly Series (Continued)

Application Notes

Mating/Unmating — Cable Plugs



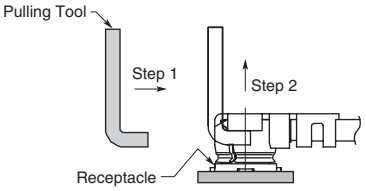

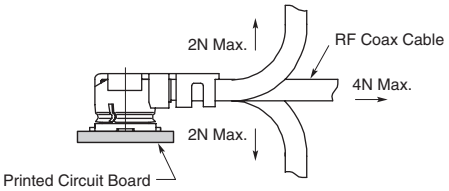

Mating/Unmating

1. To mate the connectors, insert the cable plug into the SMT receptacle, making sure the cable plug is as vertical as possible and the mating axis of both connectors are aligned. Do not insert on an extreme angle.
2. To unmate the connectors, insert the end portion of the extraction tool under the SMT receptacle connector flanges and pull off vertically in the direction of the mating axis.

Permissible Load

Do not apply excessive load to the cable after the connectors are mated. Please refer to the permissible loads indicated in the figure to the right.

Tape and Reel Packaging Specifications

Standard Receptacles

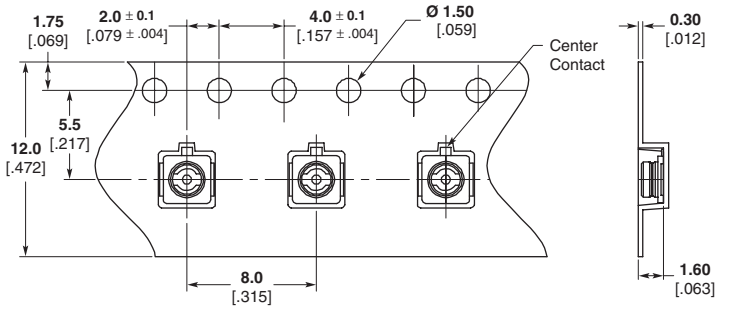

Dimensions of Taping

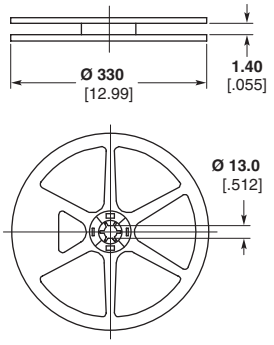

Dimensions Reel (2500 Pieces/Reel)

Soldering Profile — SMT Receptacle

Recommended Temperature Profile (Reference)

1. The preferred technique for mounting the SMT Receptacle package is to reflow solder the device onto a PCB (Printed Circuit Board).
2. The maximum temperature for the lead of PCB surface does not exceed 240°C.
3. The right reflow soldering profile is for reference and will modify under individual different conditions.

Hand Soldering (Reference only)

1. Soldering iron: The maximum temperature is 240°C.
2. Soldering period: within 5 seconds.

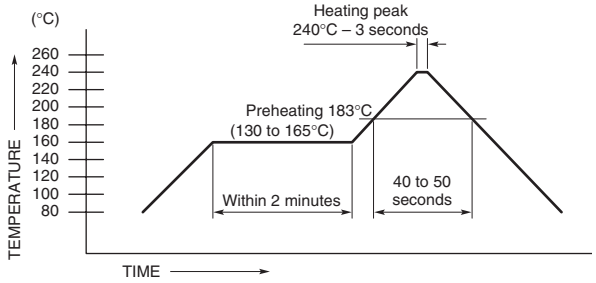

Catalog 1307191
Revised 3-07

www.tycoelectronics.com

Dimensions are in millimeters and inches unless otherwise specified. Values in brackets are standard equivalents.

Dimensions are shown for reference purposes only. Specifications subject to change.

USA: 1-800-522-6752
Canada: 1-905-470-4425
Mexico: 01-800-733-8926
C. America: 52-55-1106-0803

South America: 55-11-2103-6000
Hong Kong: 852-2735-1628
Japan: 81-44-844-8013
UK: 44-8706-080-208

COAXICON Series Mobile Phone Switching Coax Connectors

Product Facts

- **Able to switch RF signal from internal to external antenna**
- **SMD component for standard pick & place**
- **Up to 2.4 GHz**
- **Up to 30,000 life cycles**
- **High radial and axial tolerance capture**
- **Low insertion loss**
- **Right-angle cable plug with floating for alignment tolerance capture**
- **Application in handsets**



Product Specification

108-71000

Technical Features

Impedance — 50 Ohms

Operating Temperature — –40°C to +85°C

Radial Tolerance Capture — ±1.0 [.039] (except for 3.5 [.138] height)

Axial Tolerance Capture — 0.6 [.024]

Plating — Outer shell and center contact are gold plated

Short Stamped Contact — Selective gold plating

Long Stamp Contact (switch) — Full gold plating with ink barrier

Insertion Loss — 0.30 dB max. at 2 GHz

Isolation — 26 dB min. at 2 GHz

VSWR — 1.15:1 at 1 GHz, below 1.20:1 at 2 GHz

Mated Insertion Loss (after life cycle testing) — Below 0.30 dB at 1 GHz, below 0.45 dB at 2 GHz

Unmated Insertion Loss (after life cycle testing) — Below 0.20 dB at 1 GHz, below 0.35 dB at 2 GHz

Packaging on reels for SMD.

For more details, refer to the product specification.

The Tyco Electronics SMD mobile phone connector system offers a low-cost and effective solution to passive switching between an internal and external phone antenna. When implemented in a cradle kit, the connector helps to make possible hands-free operation of the mobile phone within a vehicle, enhancing safety and permitting compliance with a growing body of legislation. Connection to the external antenna also enhances signal gain and clarity.

The connector design accommodates gross misalignment between the phone and cradle, which is extremely important when blindmating is necessary. The Tyco Electronics switching coax connector system meets all performance objectives, including up to 30,000 connect/disconnect and switching cycles over the connector's life.

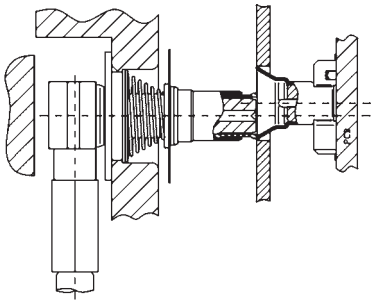

Figure 1 — System Configuration

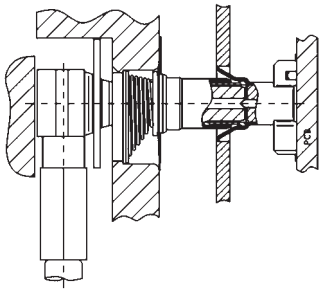

Figure 2 — System Configuration

Catalog 1307191
Revised 3-07

www.tycoelectronics.com

Dimensions are in millimeters and inches unless otherwise specified. Values in brackets are standard equivalents.

Dimensions are shown for reference purposes only. Specifications subject to change.

USA: 1-800-522-6752
Canada: 1-905-470-4425
Mexico: 01-800-733-8926
C. America: 52-55-1106-0803

South America: 55-11-2103-6000
Hong Kong: 852-2735-1628
Japan: 81-44-844-8013
UK: 44-8706-080-208

COAXICON Series Mobile Phone Switching Coax Connectors (Continued)

Right-Angle Cable Plugs



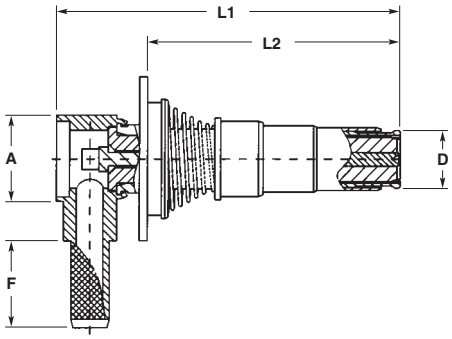

Note: Hex Crimp Dim. 3.25 [.128]

RG/U Cable	Dimensions					Single Packed Part No.	Bulk Packed Part No.
	A	D	F	L1	L2		
RG 174	5x5 Square	**3.4** .134	**6.9** .272	**15.6** .614	**10.9** .429	**619028-2**	**5-619028-2**
	5x5 Square	**3.4** .134	**9.6** .378	**15.6** .614	**10.9** .429	**619028-4**	**5-619028-4**
	6.0 .236	**3.4** .134	**6.9** .272	**15.8** .622	**10.9** .429	**619041-2**	**5-619041-2**
	6.0 .236	**3.4** .134	**9.6** .378	**15.8** .622	**10.9** .429	**619041-4**	**5-619041-4**
	6.0 .236	**3.4** .134	**6.9** .272	**20.3** .799	**11.0** .433	**619078-1**	**5-619078-3**
	6.0 .236	**3.4** .134	**9.6** .378	**20.3** .799	**11.0** .433	**619078-2**	**5-619078-4**

SMD Switching Jacks



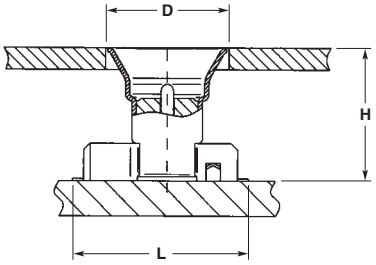

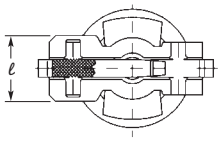

Dimensions			Diameter D	Part No.
H	L	ℓ		
6.0 .236	**8.0** .315	**3.2** .126	**5.4** .213	**619061-1**
4.5 .177	**8.0** .315	**3.2** .126	**5.4** .213	**619062-1**
3.5 .137	**8.0** .315	**3.2** .126	**5.4** .213	**619072-1**

Other models upon request.
For all dimensions, stencil and PCB recommended layout, see customer drawing.
*Dim. ℓ is the width of the connector on the PCB.

Note: Part Numbers are RoHS compliant except: ♦ Indicates non-RoHS compliant.

Catalog 1307191
Revised 3-07

www.tycoelectronics.com

Dimensions are in millimeters and inches unless otherwise specified. Values in brackets are standard equivalents.

Dimensions are shown for reference purposes only. Specifications subject to change.

USA: 1-800-522-6752
Canada: 1-905-470-4425
Mexico: 01-800-733-8926
C. America: 52-55-1106-0803

South America: 55-11-2103-6000
Hong Kong: 852-2735-1628
Japan: 81-44-844-8013
UK: 44-8706-080-208

COAXICON Series Mobile Phone Switching Coax Connectors (Continued)

Switching SMD Jack
Low Profile

Part Number 619061-1,
Part Number 619062-1, and
Part Number 619072-1



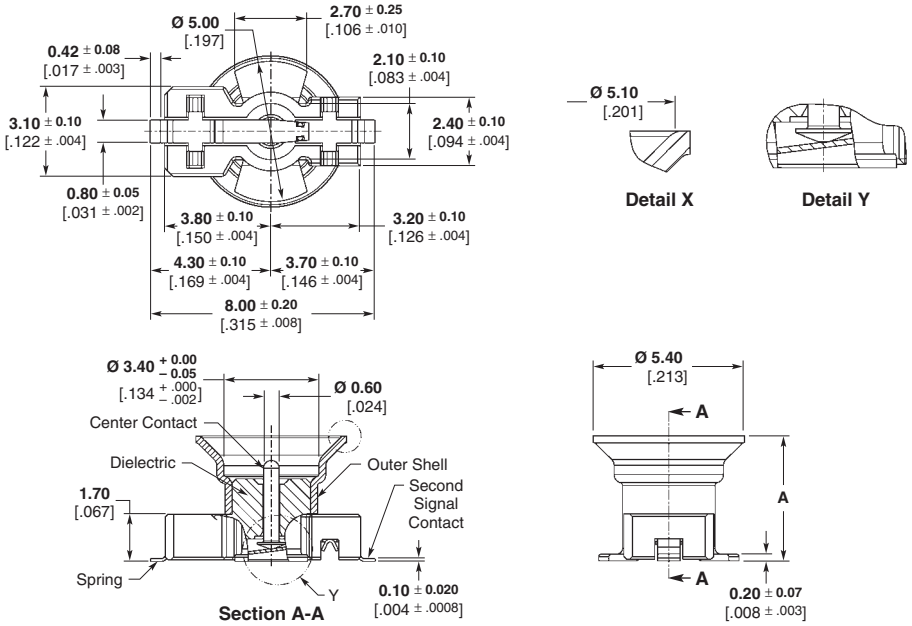

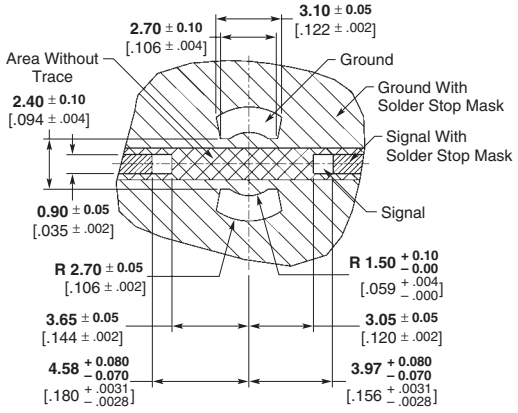

Recommended PCB Layout

Plating	Dim. A	Part No.
Gold	**6.00 ± 0.10** .236 ± .004	**619061-1**
Gold	**4.50 ± 0.10** .177 ± .004	**619062-1**
Gold	**3.50 ± 0.10** .138 ± .004	**619072-1**

Note: Part Numbers are RoHS compliant except: ♦ Indicates non-RoHS compliant.

Catalog 1307191
Revised 3-07

www.tycoelectronics.com

Dimensions are in millimeters and inches unless otherwise specified. Values in brackets are standard equivalents.

Dimensions are shown for reference purposes only. Specifications subject to change.

USA: 1-800-522-6752
Canada: 1-905-470-4425
Mexico: 01-800-733-8926
C. America: 52-55-1106-0803

South America: 55-11-2103-6000
Hong Kong: 852-2735-1628
Japan: 81-44-844-8013
UK: 44-8706-080-208

COAXICON Series Mobile Phone Switching Coax Connectors (Continued)

Switching SMD Jack
ESD Protected
Part Number 619133-3

Plating — Gold



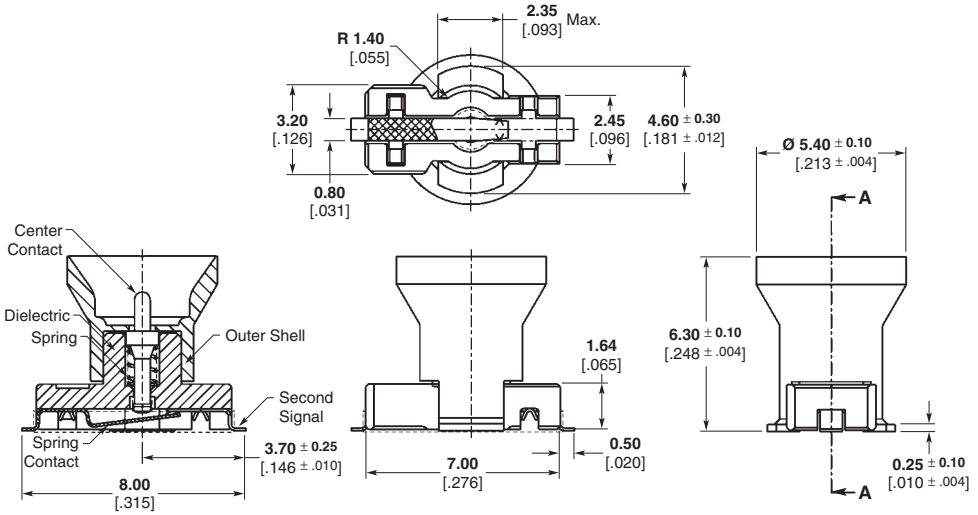

Section A-A

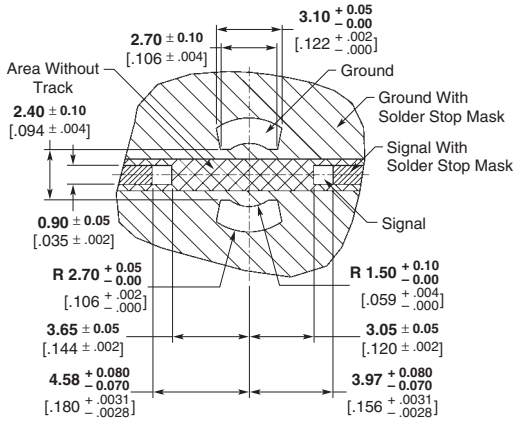

Recommended PCB Layout

Note: Part Numbers are RoHS compliant except: ♦ Indicates non-RoHS compliant.

Catalog 1307191
Revised 3-07

www.tycoelectronics.com

Dimensions are in millimeters and inches unless otherwise specified. Values in brackets are standard equivalents.

Dimensions are shown for reference purposes only. Specifications subject to change.

USA: 1-800-522-6752
Canada: 1-905-470-4425
Mexico: 01-800-733-8926
C. America: 52-55-1106-0803

South America: 55-11-2103-6000
Hong Kong: 852-2735-1628
Japan: 81-44-844-8013
UK: 44-8706-080-208

COAXICON Series Mobile Phone Switching Coax Connectors (Continued)

Switching SMD Jack
ESD Protected
4.1mm Height
Part Number 619201-1*

Plating — Gold



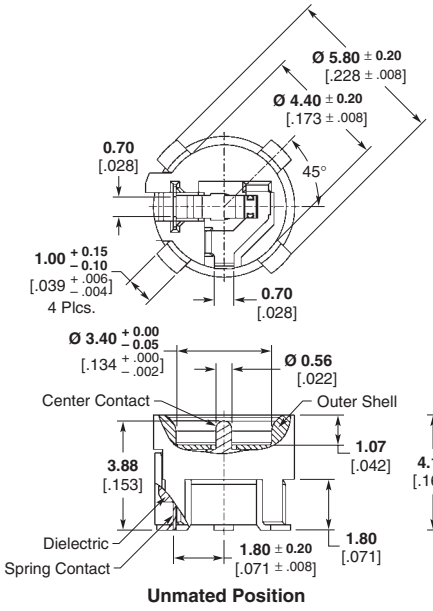

Mated Position

Unmated Position

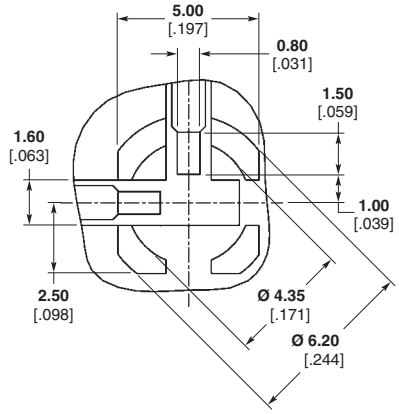

Recommended PCB Layout

***Mirrored Version of Part Number 619201-1 Also Available Under Part Number 619231-1**

Switching SMD Jack Mid
Part Number 619075-1

Plating — Gold



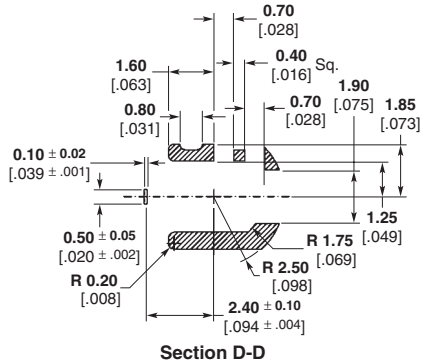

Section D-D

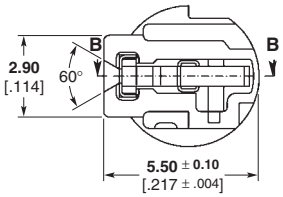

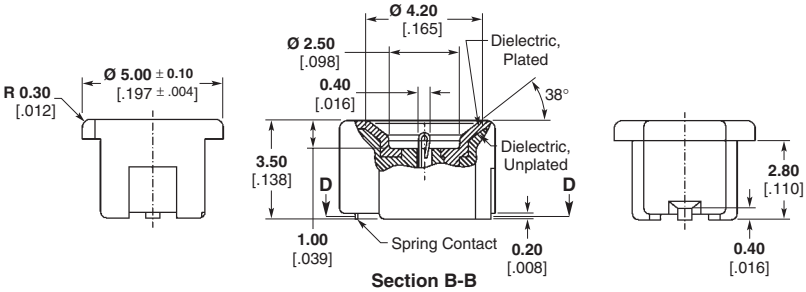

Section B-B

Note: Part Numbers are RoHS compliant except: ♦ Indicates non-RoHS compliant.

Catalog 1307191
Revised 3-07

www.tycoelectronics.com

Dimensions are in millimeters and inches unless otherwise specified. Values in brackets are standard equivalents.

Dimensions are shown for reference purposes only. Specifications subject to change.

USA: 1-800-522-6752
Canada: 1-905-470-4425
Mexico: 01-800-733-8926
C. America: 52-55-1106-0803

South America: 55-11-2103-6000
Hong Kong: 852-2735-1628
Japan: 81-44-844-8013
UK: 44-8706-080-208

COAXICON Series Mobile Phone Switching Coax Connectors (Continued)

Micro Switching Coax Connector

Part Number 619196-1

Plating — Gold

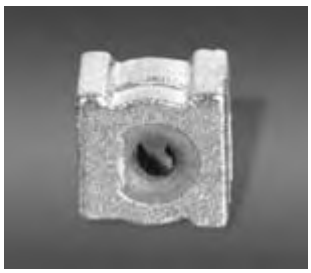

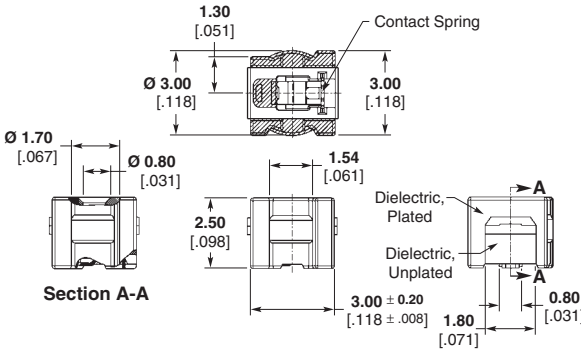

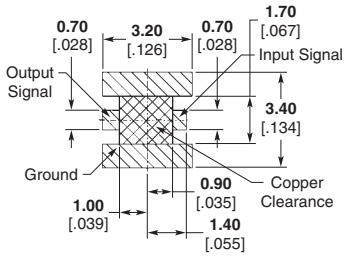

Recommended PCB Layout

Right-Angle Cable Plug For Micro Switching Coax Connector Cable RG 316/ RG 174

Part Number 619211-2

Plating — Gold



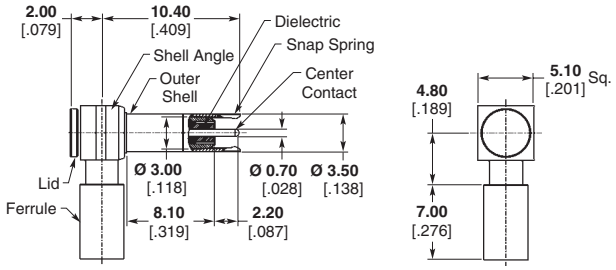

Nano Switching Coax

Part Number 619213-1

Plating — Gold

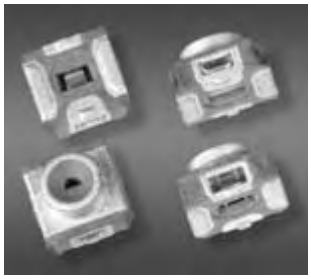

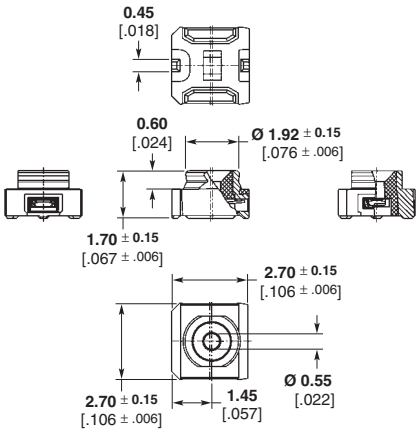

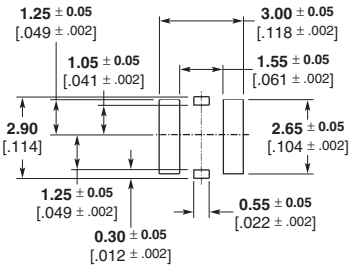

Recommended PCB Layout

Note: Part Numbers are RoHS compliant except: ♦ Indicates non-RoHS compliant.

Catalog 1307191
Revised 3-07

www.tycoelectronics.com

Dimensions are in millimeters and inches unless otherwise specified. Values in brackets are standard equivalents.

Dimensions are shown for reference purposes only. Specifications subject to change.

USA: 1-800-522-6752
Canada: 1-905-470-4425
Mexico: 01-800-733-8926
C. America: 52-55-1106-0803

South America: 55-11-2103-6000
Hong Kong: 852-2735-1628
Japan: 81-44-844-8013
UK: 44-8706-080-208

COAXICON Series Mobile Phone Switching Coax Connectors (Continued)

Protected Front Contact Cable Plug

Part Number 5-619028-1, Part Number 5-619078-1, and Part Number 5-619137-1

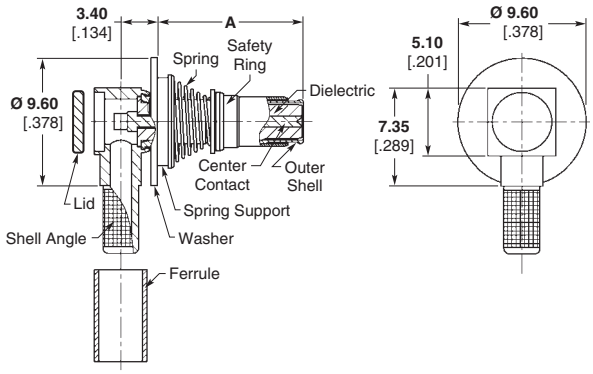

Plating	Dim. A	Part No.
Gold	10.92 .430	5-619028-1
Gold	14.90 .587	5-619078-1
Gold	10.92 .430	5-619137-1*

Bulk packaging.
*Outer conductor without slot.

Protected Front Contact Cable Plug With Cylindrical Interface

Part Number 5-619076-2

Plating — Gold
Bulk packaging.

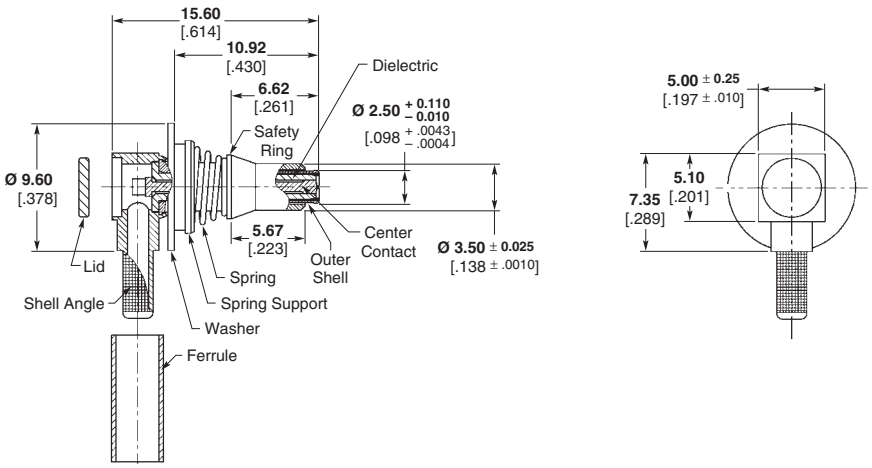

Cable Plug/ SMA Jack Adapter

Part Number 619052-1

Plating — Gold

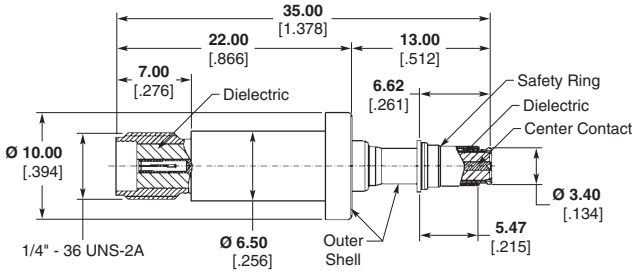

Cable Plug/ SMA Jack Adapter With Conical Flange

Part Number 619068-1

Plating — Gold

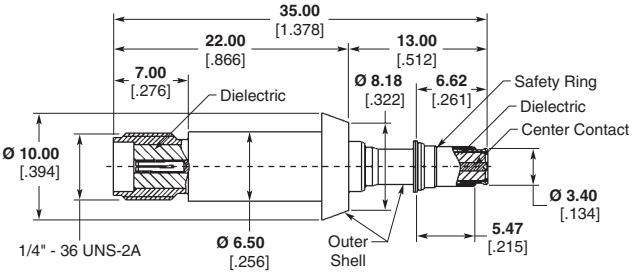

Note: Part Numbers are RoHS compliant except: ♦ Indicates non-RoHS compliant.

Catalog 1307191
Revised 3-07

www.tycoelectronics.com

Dimensions are in millimeters and inches unless otherwise specified. Values in brackets are standard equivalents.

Dimensions are shown for reference purposes only. Specifications subject to change.

USA: 1-800-522-6752
Canada: 1-905-470-4425
Mexico: 01-800-733-8926
C. America: 52-55-1106-0803

South America: 55-11-2103-6000
Hong Kong: 852-2735-1628
Japan: 81-44-844-8013
UK: 44-8706-080-208

COAXICON Series Mobile Phone Switching Coax Connectors (Continued)

Switching SMD Jack/ SMA Jack Adapter

Part Number 619053-1

Plating — Gold

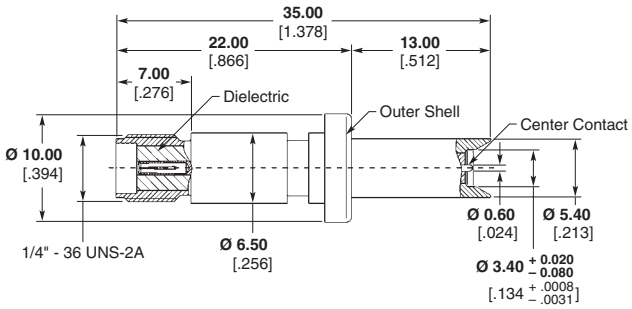

Adapter SMA Jack — MSC Test Plug With Conical Flange

Part Number 619210-1

Plating — Gold

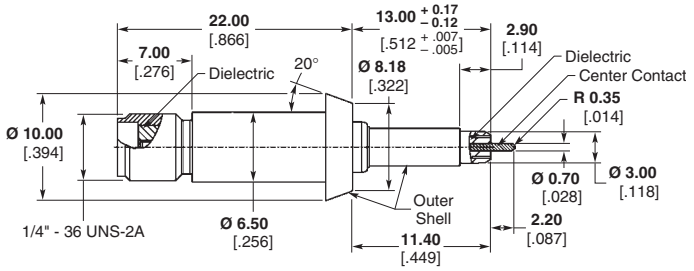

Adapter SMA Jack — NSC Test Plug With Two-Hole Flange

Part Number 619214-1

Plating — Gold

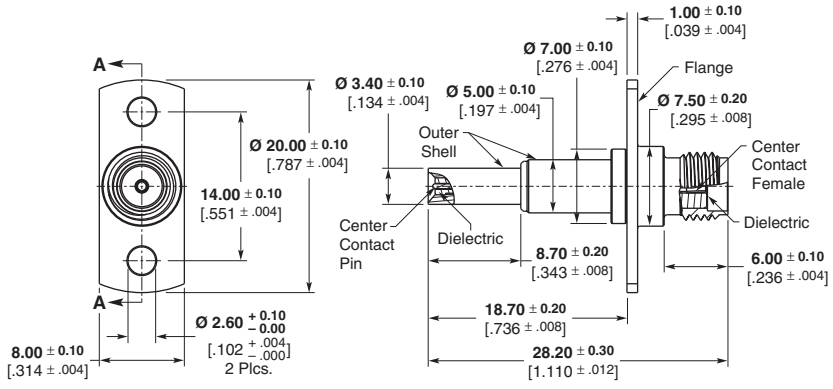

Note: Part Numbers are RoHS compliant except: ♦ Indicates non-RoHS compliant.

Catalog 1307191
Revised 3-07

www.tycoelectronics.com

Dimensions are in millimeters and inches unless otherwise specified. Values in brackets are standard equivalents.

Dimensions are shown for reference purposes only. Specifications subject to change.

USA: 1-800-522-6752
Canada: 1-905-470-4425
Mexico: 01-800-733-8926
C. America: 52-55-1106-0803

South America: 55-11-2103-6000
Hong Kong: 852-2735-1628
Japan: 81-44-844-8013
UK: 44-8706-080-208

Quick Snap Stripline (QSL) Coaxial Connector

Coaxial Cable Displacement Interface

- Low profile
- Highly reliable ruggedized interface
- Surface mount technology
- Excellent price-to-performance ratio
- Platform expandable to include multi-port versions and other customization

Product Facts

- Surface mount compatible
- RoHS compliant (lead-free SMT process [260° C] compatible)
- PCI / PCI Express compatible
- Designed for RG 174 & RG 316 Cable, and easily adaptable to other cable types
- Overall Height < 10 mm
- Can be packaged to meet IP67 Sealing
- 10mm x 10.6mm max. footprint (w/o panel extension)
- Cost effective solution to standard screw machine RF connectors

Applications

- PCI, Mini PCI, PCI Express
- Mobile Antenna/GPS/Radio Systems/RFID
- PDA / PCS / Cellular Handset applications
- Wireless Communications systems
- Satellite Communications, Broadcast, Multimedia
- Automotive Telematics

Related Product Data

Product Specification — 108-2224





Specifications

Characteristic Impedance — 50 Ohms

Frequency Range — Dc to 6 GHz

VSWR — 1.3 Max to 3 GHz, 1.5 Max to 6 GHz

Rated Voltage — 60 VAC rms

Dielectric Withstanding Voltage — 800 VAC, 50 Hz (at sea level)

Insulation Resistance — 100 Megohms min

Operating Temperature — –40 to +125°C

Engagement Force — < 30 N

Disengagement Force — < 20 N

Cable Retention — 110 N

Durability — 250 cycles

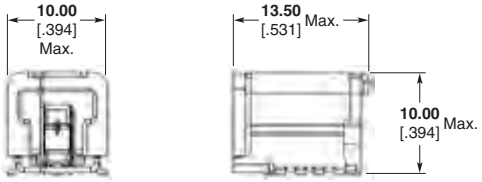

Surface Mount Jack Receptacle

Part Number
1274794-1

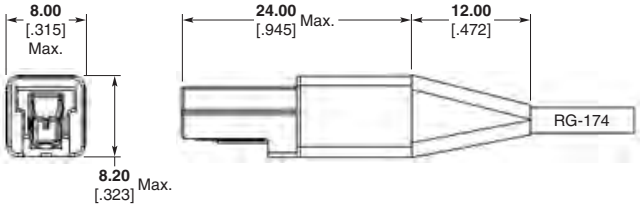

Cable Plug

Part Number
1274795-1

PCI, PCI EXPRESS are trademarks of PCI SIG.

Note: Part Numbers are RoHS compliant except: ♦ Indicates non-RoHS compliant.

Catalog 1307191
Revised 3-07

www.tycoelectronics.com

Dimensions are in millimeters and inches unless otherwise specified. Values in brackets are standard equivalents.

Dimensions are shown for reference purposes only. Specifications subject to change.

USA: 1-800-522-6752
Canada: 1-905-470-4425
Mexico: 01-800-733-8926
C. America: 52-55-1106-0803

South America: 55-11-2103-6000
Hong Kong: 852-2735-1628
Japan: 81-44-844-8013
UK: 44-8706-080-208

DIN Inserts

Product Facts

- **Meets requirements of DIN 41626 and CECC 22330**
- **Suitable for DIN 41612 Type M Connectors (Eurocard), Siedecon, and Z-PACK 2mm HM Connectors**
- **Meets DIN Performance Level II**
- **Crimp termination for inner and outer conductors (cable mount only) eliminates the need for solder**
- **Right-angle and vertical style board mount pin and socket contacts**
- **Board mount product available with both solder and compliant tails**
- **Straight cable mount pin and socket contacts for RG 316, and RG 179 cable**
- **Contact impedance of 50 and 75 ohms for cable mount and 50 ohms for board mount**



Coaxial inserts according to CECC 22 330 and high-current inserts (CECC specification under preparation) can be used in conjunction with a DIN 41612 style M contact base (CECC 75 101-801), SIEDECON, and Z-PACK 2mm HM connectors.

Coaxial inserts have a contact system based on the pin-socket principle with the same dimensions as the Series 1.0/2.3 coaxial connectors and are plug-compatible. The product family is represented by various 50Ω and 75Ω styles that can be used far into the GHz range. The high mounting density (pitch between adjacent contacts starting at 7.5 mm) and installation into the contact base, by means of a "snap-in" lock, make the inserts particularly well suited for applications.

Due to the centering,

- coaxial plugs are installed in contact bases with audio-frequency (AF) female contacts
- coaxial jacks are installed in contact bases with AF male contacts.

The high-quality materials used with coaxial inserts ensure a high grade of service even in an industrial atmosphere.

Technical Data

Electrical and mechanical characteristics of coaxial inserts in accordance with DIN 41626 Part 2 and CECC 22 330

Characteristic Impedance — 50/75 Ω

Frequency Range — up to 2 GHz

Reflection Factor Up To 2 GHz [1] — ≤ 0.10

Insulation Resistance —
Initial value — ≥ 1 GΩ
After stressing — ≥ 200 MΩ

Screening Effectiveness — ≥ 70 dB

Inner Conductor Contact Resistance After Stressing — ≤ 10 mΩ

Outer Conductor Continuity After Stressing — ≤ 7.5 mΩ

Voltage Proof [2] —
Flexible Cables (RG 316)
At sea level — 750 V, 50 Hz
At 20 km altitude — 150 V, 50 Hz

Working Voltage [2] —
Flexible Cables (RG 316)
At sea level — 350 V, 50 Hz
At 20 km altitude — 65 V, 50 Hz

Service Life — 500 cycles

Climatic Category — 55/125/56

Notes
1 Guideline dimensions, depending on cable type and connector style.
2 Some cable types suitable for use with these connectors have lower characteristic values than specified here.

Catalog 1307191
Revised 3-07

www.tycoelectronics.com

Dimensions are in millimeters and inches unless otherwise specified. Values in brackets are standard equivalents.

Dimensions are shown for reference purposes only. Specifications subject to change.

USA: 1-800-522-6752
Canada: 1-905-470-4425
Mexico: 01-800-733-8926
C. America: 52-55-1106-0803

South America: 55-11-2103-6000
Hong Kong: 852-2735-1628
Japan: 81-44-844-8013
UK: 44-8706-080-208

DIN Inserts (Continued)

Coaxial Inserts, 50 Ohm Z-PACK 2mm HM Connectors

Vertical PC Board Mount, Compliant

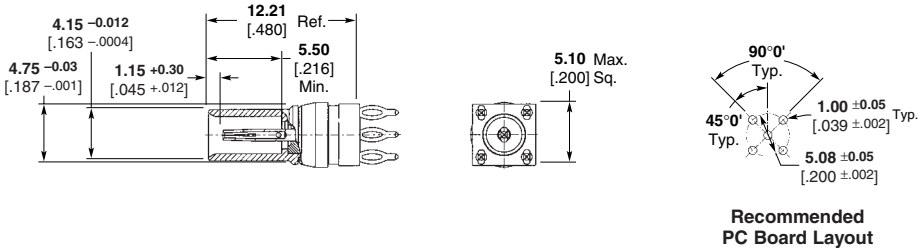

Recommended PC Board Layout

Right-Angle PC Board Mount, Compliant

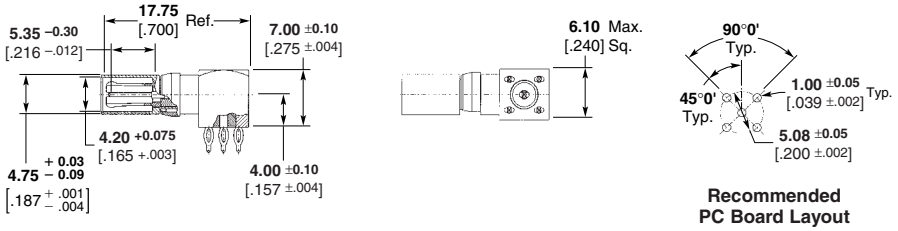

Recommended PC Board Layout

Type	Housing Type	Application Tooling	Part No.
Vertical PCB Socket, Compliant	Z-PACK 2mm HM Male	904800-1	**5148385-1**
Rt. Angle PCB Pin, Compliant	Z-PACK 2mm HM Female	904805-1 904804-1 Support Anvil	**5148386-1**

Coaxial Inserts to SMA Adapters

Coaxial Insert Plug to SMA Jack

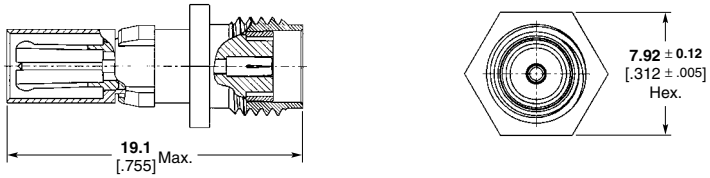

Part No.
1274192-1

Coaxial Insert Socket to SMA Jack

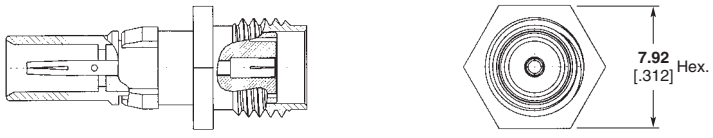

Part No.
1274191-1

Note: Part Numbers are RoHS compliant except: ♦ Indicates non-RoHS compliant.

Catalog 1307191
Revised 3-07

www.tycoelectronics.com

Dimensions are in millimeters and inches unless otherwise specified. Values in brackets are standard equivalents.

Dimensions are shown for reference purposes only. Specifications subject to change.

USA: 1-800-522-6752
Canada: 1-905-470-4425
Mexico: 01-800-733-8926
C. America: 52-55-1106-0803

South America: 55-11-2103-6000
Hong Kong: 852-2735-1628
Japan: 81-44-844-8013
UK: 44-8706-080-208

DIN Inserts (Continued)

Coaxial Inserts (50 Ω/75 Ω)

Bulkhead Cable Jack for
male connectors

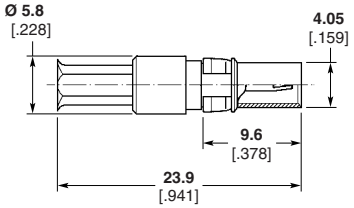

Ø Max.	Cable Type	Width Across Flats of Hex Profile	Part No.
2.6 .102	RG 316 (50 Ω)	**3.2** .126	**1392020-1**
2.67 .105	RG 179 (75 Ω)	**3.2** .126	**3-1393668-4**

Bulkhead Cable Jack for
female connectors

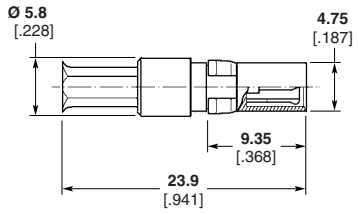

Ø Max.	Cable Type	Width Across Flats of Hex Profile	Part No.
2.6 .102	RG 316 (50 Ω)	**3.2** .126	**1392019-1**
2.67 .105	RG 179 (75 Ω)	**3.2** .126	**3-1393668-0**

Right-Angle Bulkhead Jack for
male connectors

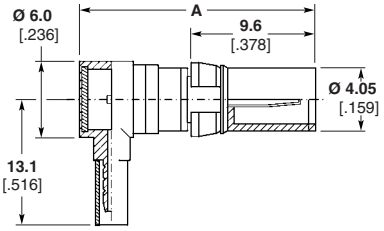

Dim A	Ø Max.	Cable Type	Width Across Flats of Hex Profile	Part No.
19 .748	**2.6** .102	RG 316 (50 Ω)	**3.2** .126	**1-1393668-2**
	2.67 .105	RG 179 (75 Ω)		
22.4 .882	**2.67** .105	RG 179 (75 Ω)	**3.2** .126	**2-1393668-8**
24.0 .945	**2.67** .105	RG 179 (75 Ω)	**3.2** .126	**3-1393668-6**

Right-Angle Bulkhead Plug for
female connectors

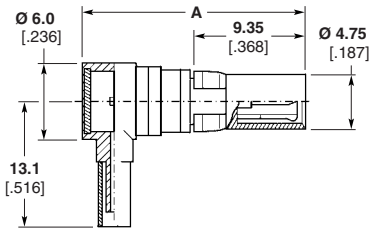

Dim A	Ø Max.	Cable Type	Width Across Flats of Hex Profile	Part No.
18.7 .736	**2.6** .102	RG 316 (50 Ω)	**3.2** .126	**1393668-4**
22.3 .878	**2.6** .102	RG 316 (50 Ω)	**3.2** .126	**1393668-8**
18.7 .736	**3.0** .118	RD 316 (50 Ω)	**3.6** .142	**1393668-7**
18.7 .736	**2.67** .105	RG 179 (75 Ω)	**3.2** .126	**2-1393668-4**

Note: Part Numbers are RoHS compliant except: ♦ Indicates non-RoHS compliant.

Catalog 1307191
Revised 3-07

www.tycoelectronics.com

Dimensions are in millimeters and inches unless otherwise specified. Values in brackets are standard equivalents.

Dimensions are shown for reference purposes only. Specifications subject to change.

USA: 1-800-522-6752
Canada: 1-905-470-4425
Mexico: 01-800-733-8926
C. America: 52-55-1106-0803

South America: 55-11-2103-6000
Hong Kong: 852-2735-1628
Japan: 81-44-844-8013
UK: 44-8706-080-208

DIN Inserts (Continued)

Coaxial Inserts (50 Ω/75 Ω) (Continued)

Bulkhead Plug, PC Board connection for DIN 41612 M female connectors

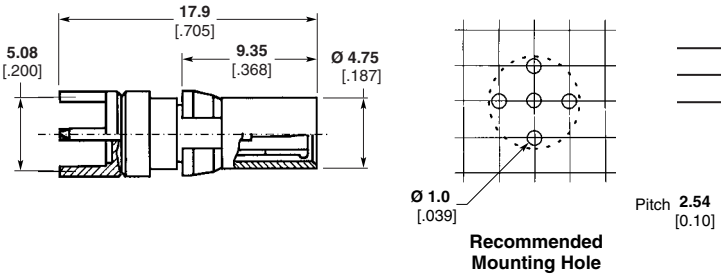

Part No.
1-1393662-0

Right-Angle Bulkhead Jack, PC Board for DIN 41612 M male connectors

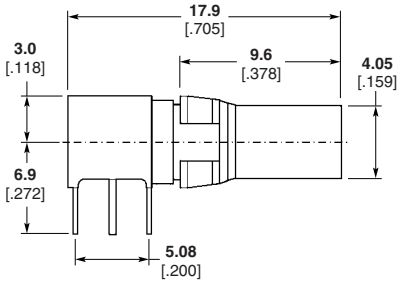

Part No.
1-1393662-4

Right-Angle Bulkhead Plug, PC Board for SIEDECON female connectors

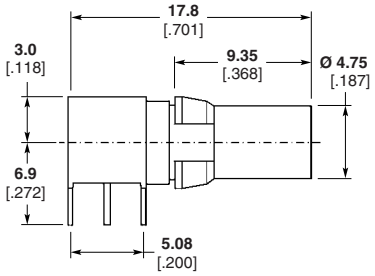

Part No.
1-1393662-2

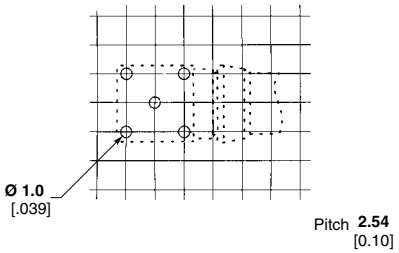

Recommended Mounting holes for Part No. 1-1393662-2 and 1-1393662-4

Note: Part Numbers are RoHS compliant except: ♦ Indicates non-RoHS compliant.

Catalog 1307191
Revised 3-07

www.tycoelectronics.com

Dimensions are in millimeters and inches unless otherwise specified. Values in brackets are standard equivalents.

Dimensions are shown for reference purposes only. Specifications subject to change.

USA: 1-800-522-6752
Canada: 1-905-470-4425
Mexico: 01-800-733-8926
C. America: 52-55-1106-0803

South America: 55-11-2103-6000
Hong Kong: 852-2735-1628
Japan: 81-44-844-8013
UK: 44-8706-080-208

Size 8 Contacts

Performance Characteristics

Frequency Range — 0 to 500 MHz

Operating Voltage, Max. — 275 vac rms @ sea level

Termination Resistance, Max. — Center Contact — 6.0 milliohms
Outer Contact — 3.0 milliohms

Insulation Resistance, Min. — 5,000 megohms @ 500 vdc

Dielectric Withstanding Voltage — Sea Level — 800 Volts rms
30,000 ft [9,144 m] — 525 volts rms
70,000 ft [21,336m] — 275 volts rms

VSWR to 500MHz, Max.

Pin/Socket	VSWR
Straight/Straight	1.30
Right-Angle/Straight	1.35
Right-Angle/Right-Angle	1.40

RF Crosstalk — 90dB @ 5-500 MHz

Mating Force, Max. — 4.0 lb [17.8 N]

Unmating Force, Min. — 2.0 oz [0.556 N]

Contact Retention — 20 lb [89 N]

Contact Durability — 500 cycles

Cable RG/U	Force lb	Force [N]
316, 188, 174, 179, 179A, 179B	20	89
188-type Double-Braid	35	155.8
142, 142A, 142B	50	222.5

Operating Temperature — 55°C to +125°C

Thermal Shock — 55°C to +125°C per MIL-STD-1344, Method 1003, Cond. A

Physical Shock — 50 G's per MIL-STD-1344, Method 2004, Cond. A

Vibration — MIL-STD-1344, Method 2005, Cond. II

Moisture Resistance — 240 hours per MIL-STD-1344, Method 1002, Cond. II

Salt Fog — 48 hours per MIL-STD-1344, Method 1001, Cond. B

Extraction Tool Numbers

Subminiature D Housings — 58095-1 (AMPLIMITE)

AMP-HDI Housings — 58095-2

Material

Brass — per QQ-B-626 and MIL-C-50

Phosphor Bronze — per QQ-B-750

Beryllium Copper — per QQ-C-530

PTFE—per MIL-P-19468

Nylon—per MIL-M-20693

Finish

Bright Tin Plating — per ASTM-B-571

Copper Plating — per MIL-C-14550

Gold Plating — per MIL-G-45204

Nickel Plating — per QQ-N-290

Straight Contacts

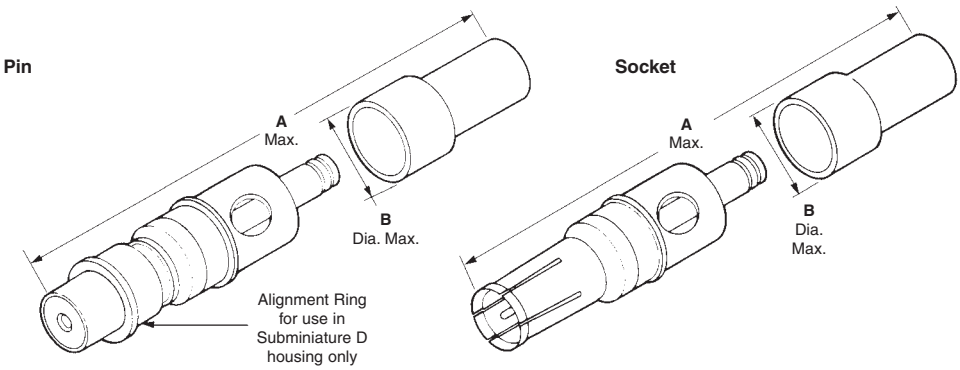

RG/Cable	Shell Type	Dimensions A	Dimensions B	Die Insert*	50 Ohm Pin	50 Ohm Socket	Non-Impedance Matched Pin	Non-Impedance Matched Socket
178, 178A 178B,196, 196A	Brass	**24.13** .950	**5.94** .234	59993-1	—	—	**5228618-5**	**5228596-5**
174, 316, 188, 188A	Brass	**24.28** .956	**5.94** .234	59993-1	**5221980-1**	—	**5228618-1**	**5228596-1**
179, 179A, 179B, 187, 187A, 161, BELDEN 9221	Brass	**24.28** .956	**5.94** .234	59993-1	—	—	**5228618-2**	**5228596-2**
174, 316, 188, Double Braid	Brass	**24.28** .956	**5.94** .234	59993-1	—	—	**5228618-3**	**5228596-3**
142, 142A, 142B, 400, BELDEN 9246	Brass	**27.43** 1.08	**6.48** .255	58212-1	—	**5221981-2**	**5228618-4**	**5228596-4**

*For hand tool 69710-1 or pneumatic tool 69365-8.
Note: Non-Impedance Matched and 50 Ohm are not intermateable.

BELDEN is a trademark of Belden Wire and Cable Company.

Note: Part Numbers are RoHS compliant except: ♦ Indicates non-RoHS compliant.

Catalog 1307191
Revised 3-07

www.tycoelectronics.com

Dimensions are in millimeters and inches unless otherwise specified. Values in brackets are standard equivalents.

Dimensions are shown for reference purposes only. Specifications subject to change.

USA: 1-800-522-6752
Canada: 1-905-470-4425
Mexico: 01-800-733-8926
C. America: 52-55-1106-0803

South America: 55-11-2103-6000
Hong Kong: 852-2735-1628
Japan: 81-44-844-8013
UK: 44-8706-080-208

Size 8 Contacts (Continued)

PC Board Mount Contacts

Right-Angle Socket Contact

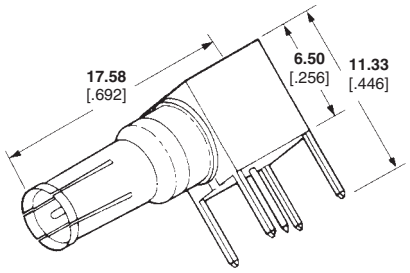

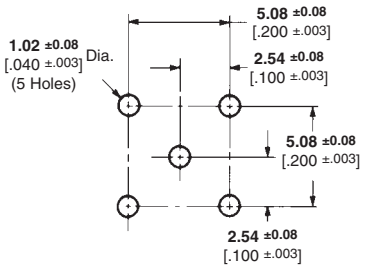

Recommended PC Board Layout

Type	Contact Part No.
	Non-Impedance Matched
Right-Angle Socket Contact	5221162-1

Note: Part Numbers are RoHS compliant except: ♦ Indicates non-RoHS compliant.

Catalog 1307191
Revised 3-07

www.tycoelectronics.com

Dimensions are in millimeters and inches unless otherwise specified. Values in brackets are standard equivalents.

Dimensions are shown for reference purposes only. Specifications subject to change.

USA: 1-800-522-6752
Canada: 1-905-470-4425
Mexico: 01-800-733-8926
C. America: 52-55-1106-0803

South America: 55-11-2103-6000
Hong Kong: 852-2735-1628
Japan: 81-44-844-8013
UK: 44-8706-080-208

COAXICON Contacts

Product Facts

- **Tyco Electronics provides a variety of contacts for coaxial connectors**
- **Contacts are available in a range of sizes that may be used with the various types of coaxial cable on the market**
- **COAXICON contacts are of the crimp, snap-in type and are available in the following designs: Miniature Contacts, Subminiature Contacts and Size 8 Contacts**

Miniature Contacts are designed for high density multiple circuit connector applications. A wide range of cable sizes is accommodated by using three sizes of outer shell termination ends and three sizes of contacts.

Subminiature Contacts are used in high density applications and are ideal for mixing coaxial and other styles of pin and socket contacts in the same connector housing.

Size 8 Contacts are compatible with industry standard size 8 connectors such as Subminiature D and AMP-HDI connector housings. Straight and right-angle styles, as well as pc board versions for AMP-HDI connectors are available.



Catalog 1307191
Revised 3-07

www.tycoelectronics.com

Dimensions are in millimeters and inches unless otherwise specified. Values in brackets are standard equivalents.

Dimensions are shown for reference purposes only. Specifications subject to change.

USA: 1-800-522-6752
Canada: 1-905-470-4425
Mexico: 01-800-733-8926
C. America: 52-55-1106-0803

South America: 55-11-2103-6000
Hong Kong: 852-2735-1628
Japan: 81-44-844-8013
UK: 44-8706-080-208

Miniature Contacts

Performance Characteristics

Insulation Resistance — 5000 megohms min

Dielectric Withstanding Voltage — 1,000 volts rms for 1 minute

Contact Resistance — 2.0 milliohms @ 1 ampere

Low-Level Conductivity — 10 millivolts DC min.

VSWR — 1.3 to 1.0 @ 1,000 MHz max.

Cable Retention —

RG/U Cable	Retention lbs [N]
58C	50 [222]
188A	30 [133]
180B	28 [125]
195A	16 [71]

Durability — 500 cycles @ 10 cycles per minute max.

Vibration — 2 hrs. per MIL-STD-202, Method 201

Shock — 50 G's per MIL-Std-202, Method 213, Cond. G

Temperature Cycling — 5 cycles per MIL-STD-202, Method 102, Cond C.

Temperature Range — -55°C to +125°C

Test Method for Electronic and Electrical Component Parts — MIL-STD-202

Material

Outer Shell — Brass per MIL-C-50

Center Conductor — Brass per QQ-B-626, or Beryllium copper per QQ-C-533

Note:
A ferrule and retention spring (201142-2) are required for each pin and socket.
Extraction Tool No. 305183-8

Inner Dielectric — Polypropylene, nylon, or polymethylpentene, general purpose

Retention Spring — Stainless steel per QQ-S-766

Ferrule — Copper per QQ-C-576

Finish

Outer Shell, Center Conductor — 0.00076 [.000030] gold over 0.00076 [.000030] nickel

Retention Spring — Nickel per QQ-N-290

Ferrule — Bright tin per MIL-T-10727

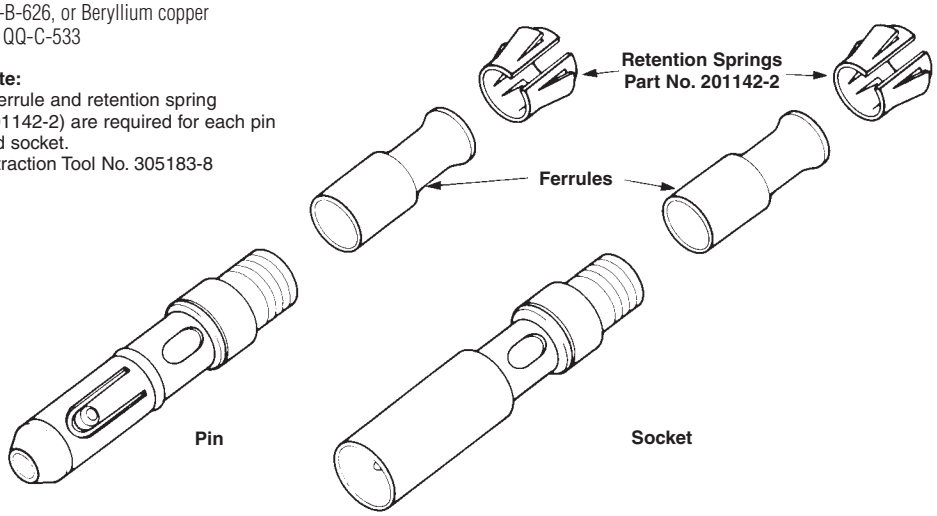

RG/U Cable	Ferrule No.	Integral Die Hand Tool	PRO-CRIMPER	Die Insert for Tools: Hand Tool 69710-1 Pneu. 69365-2, 69365-3[2]	Part Numbers	
					Pin	Socket
316, 188, 188A 174	328666	—	—	69227-2	**201143-5**	**201144-5**
179, 179A, 179B 161, 187, 187A Belden 9221	328666	—	—	69227-2	**201143-1**	**201144-1**
188 Double Braid 316 Double Braid	221848-3	58290-1	—	69227-2	**201143-5**	**201144-5**
122	328664	45639-2	91912-3	69222-2	**201145-1**	—
180, 180A, 180B 195, 195A, 21-597	328664	45639-2	91912-3	69222-2	**201145-2**	**201146-2**
Belden 8218	328664	45639-2	91912-3	69222-2	**201145-2**	**201146-2**
58, 58A, 58B, 58C	328663	45740-2	—	69220-2	**201145-4**	**201146-4**
141 55, 55A, 55B, 223	330478	69248-4	—	69315-4	**201145-4**	**201146-4**
124, 140, 210 62, 62A, 62B 59, 59A, 59B	329006	—	—	69675-1	**201097-1***	**201098-1***
Twisted Pair						
24-22 AWG [0.2-0.4 mm²] (Stranded)[1]	328666	91912-4	—	69672	**201143-5**	**201144-5**
Shielded Wire 22, NAS-702, Class B	328663	45740-2	—	69220-2	**201145-4**	**201146-4**
Brand Rex T5788A 26 AWG [0.12-0.155 mm²][3]	328664	45639-2	91912-3	69222-2	**201145-2**	**201146-2**

*These contacts are for use in the 4-position G Series connector modules only.
[1]Maximum insulation diameter–**2.92** [.115] (two wires combined).
[2]Includes bench mount and foot control; requires Manual Take-Up Attachment No. 69689.
[3]Dielectric O.D.–**2.69** [.106] max.; Cable O.D.–**4.06** [.160].

Note: Part Numbers are RoHS compliant except: ♦ Indicates non-RoHS compliant.

Catalog 1307191
Revised 3-07

www.tycoelectronics.com

Dimensions are in millimeters and inches unless otherwise specified. Values in brackets are standard equivalents.

Dimensions are shown for reference purposes only. Specifications subject to change.

USA: 1-800-522-6752
Canada: 1-905-470-4425
Mexico: 01-800-733-8926
C. America: 52-55-1106-0803

South America: 55-11-2103-6000
Hong Kong: 852-2735-1628
Japan: 81-44-844-8013
UK: 44-8706-080-208

Miniature PC Board Sockets

Material

Shell and Center Contact — Brass per MIL-C-50 and QQ-B-626

Dielectric — Polypropylene, or Polymethylpentene, general purpose

Finish

Center Contact — 0.00076 [.000030] gold over copper

Shell — Gold plated per MIL-G-45204

Performance Characteristics

Dielectric Withstanding Voltage — 1,000 volts, rms

Impedance — Non-constant

Operating Temperature Range — -55°C to +85°C

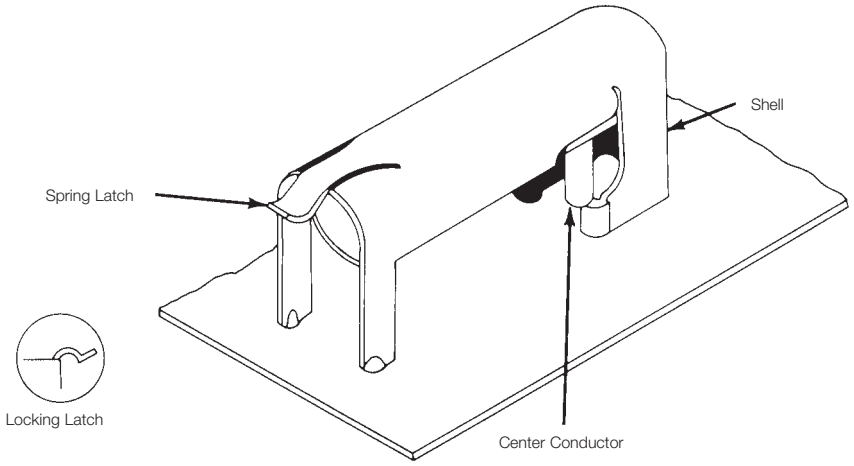

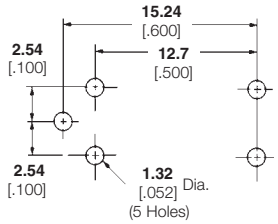

Recommended Mounting Hole Layout

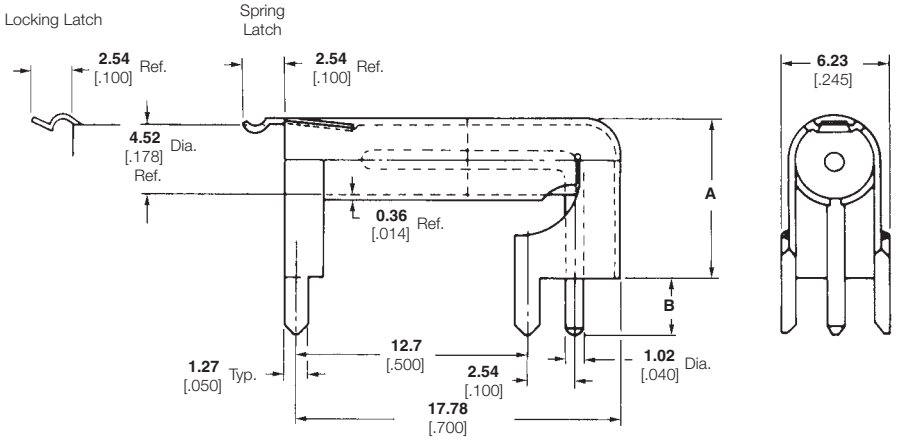

Type	PC Board Thickness	Retention		Dimensions		Part No.
		lb.	[N]	A	B	
Spring Latch	**1.57** .062	1.25	5.56	**9.07** .357	**3.18** .125	**50084-1**
Spring Latch	**3.18** .125	1.25	5.56	**7.49** .295	**4.75** .187	**50095-1**
Locking Latch	**3.18** .125	7	31.1	**7.49** .295	**4.75** .187	**50105-1**
Locking Latch	**1.57** .062	7	31.1	**9.07** .357	**3.18** .125	**50107-1**

Note: For mateable Miniature Contacts, see page 245.

Note: Part Numbers are RoHS compliant except: ♦ Indicates non-RoHS compliant.

Catalog 1307191
Revised 3-07

www.tycoelectronics.com

Dimensions are in millimeters and inches unless otherwise specified. Values in brackets are standard equivalents.

Dimensions are shown for reference purposes only. Specifications subject to change.

USA: 1-800-522-6752
Canada: 1-905-470-4425
Mexico: 01-800-733-8926
C. America: 52-55-1106-0803

South America: 55-11-2103-6000
Hong Kong: 852-2735-1628
Japan: 81-44-844-8013
UK: 44-8706-080-208

Subminiature PC Board Sockets

Material

Shell and Center Contact — Brass per MIL-C-50 and QQ-B-626

Dielectric — Polypropylene, or polymethylpentene, general purpose

Finish

Center Contact — 0.00076[.000030] gold per MIL-G-45204 over copper per MIL-C-14550

Shell — Gold

Performance Characteristics

Dielectric Withstanding Voltage — 600 volts, rms

Operating Temperature Range — -55°C to +85°C

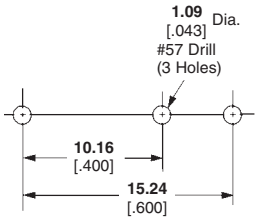

Recommended Mounting Hole Layout

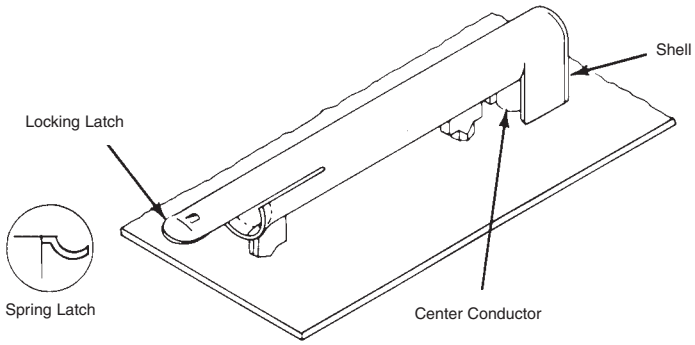

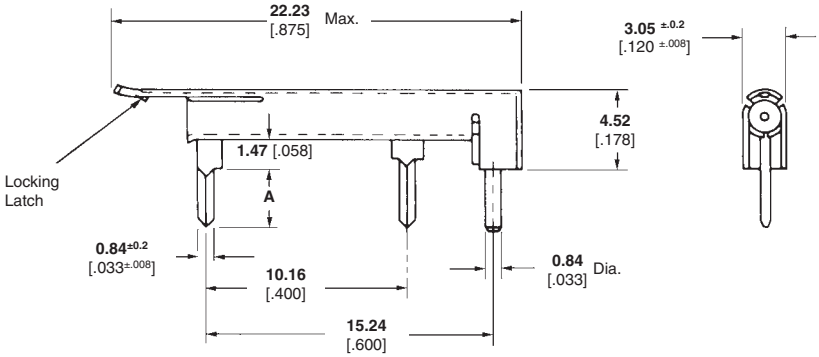

Type	PC Board Thickness	Dim. L	Part No.
Spring Latch	**1.57** .062	**2.54** .100	**226023-1**
Locking Latch	**1.57** .062	**2.54** .100	**226060-1**

Mating Subminiature COAXICON Pins

These short Subminiature COAXICON Pins are recommended for use with any of the sockets listed above.

Note: Alignment springs are not required for this application and are not included with the pin assemblies.

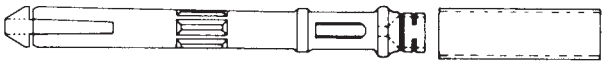

RG/U Cable	Ferrule No.	Integral Die Hand Tool	Die Insert for Tools: Hand Tool 69710-1 Pneu. 69365-2, 69365-3	Part No.
174 316, 188, 188A	1-332056-0	91911-3	69690	**51563-8**
179, 179A, 179B 187, 187A	1-332056-0	91911-4	69690-1	**51563-8**
161	1-332056-0	69656-5	—	**51563-8**

Note: Part Numbers are RoHS compliant except: ♦ Indicates non-RoHS compliant.

Catalog 1307191
Revised 3-07

www.tycoelectronics.com

Dimensions are in millimeters and inches unless otherwise specified. Values in brackets are standard equivalents.

Dimensions are shown for reference purposes only. Specifications subject to change.

USA: 1-800-522-6752
Canada: 1-905-470-4425
Mexico: 01-800-733-8926
C. America: 52-55-1106-0803

South America: 55-11-2103-6000
Hong Kong: 852-2735-1628
Japan: 81-44-844-8013
UK: 44-8706-080-208

Subminiature Contacts

Material

Outer Shell — Brass per MIL-C-50

Center Conductor — Beryllium copper per QQ-C-533 (Pin); Brass per QQ-B-626 (Socket)

Inner Dielectric — Polypropylene, nylon, or polymethylpentene, general purpose

Retention Spring — Stainless steel per QQ-S-766

Ferrule — Copper per QQ-C-576

Finish

Outer Shell and Socket Center Conductor — 0.00076 [.000030] gold over 0.00127 [.000050] nickel

Pin Center Conductor — 0.00076 [.000030] gold over 0.00254 [.000100] copper

Ferrule — Bright tin per MIL-T-10727

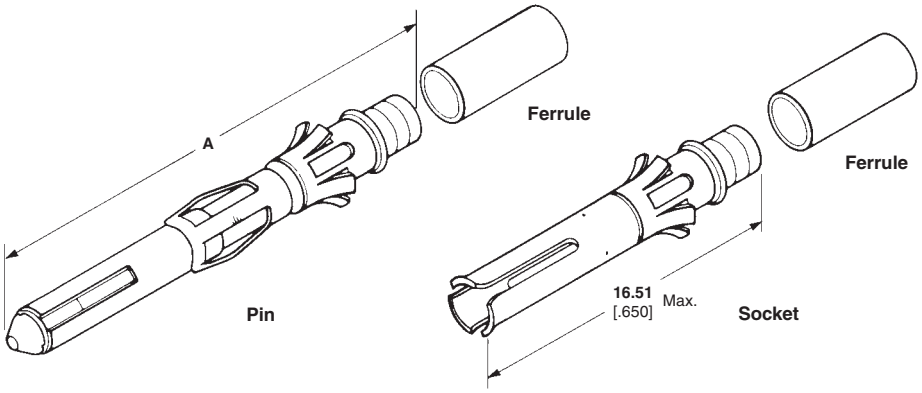

A = Multimate Pin **25.65** [1.010]
Short Pin **22.66** [.892]

Selection Chart for Coaxial Cable

RG/U Cable	Integral Die Hand Tool	PRO-CRIMPER	Die Insert for Tools: Hand Tool 69710-1 Pneu. Tool 69365-2, 69365-3*	Contact Part Numbers			
				Multimate Pin	Short Pin	Socket	Ferrule
178, 178A, 178B 196, 196A	69656-2		69690-2	**226537-2**	—	**51565-2**	1-332057-0
196 (Double Braid)	69656-9		—	**226537-2**	—	**51565-2**	225088-1
174, 316 188, 188A	—	91911-3	69690	**226537-1**	—	**51565-1**	1-332056-0
179, 179A, 179B 187, 187A Belden 9221	—	911911-4	69690-1	**226537-1**	—	**51565-1**	1-332056-0
RD-316	69656-7		—	**226537-1**	—	**51565-1**	225088-3
187 (Double Braid)	69656-8		—	**226537-1**	—	**51565-1**	225088-1
161	69656-5		—	**226537-1**	—	**51565-1**	1-332056-0

Selection Chart for Twisted Pairs and Shielded Wire

Wire Size		Integral Die Hand Tool	PRO-CRIMPER	Die Insert for Tools: Hand Tool 69710-1 Pneu. Tool 69365-2, 69365-3*	Contact Part Numbers			
AWG	[mm²]				Multimate Pin	Short Pin	Socket	Ferrule
30 (Twisted Pair, Solid)	0.05	69656-2	—	69690-2	**226537-3**	**51563-3**	**51565-3**	1-332057-0
28 (Twisted Pair, Solid)	0.08-0.09	—	91911-3	69690	**226537-3**	**51563-3**	**51565-3**	1-332057-0
28 (Twisted Pair, Stranded; 7 str., .005 [0.13] Dia.)	0.08-0.09	—	91911-4	69690-1 or 69690-2	**226537-3**	**51563-3**	**51565-3**	1-332057-0
26 (Twisted Pair, Solid or Stranded; 7 str., .0063 [0.16] Dia.)	0.12-0.15	—	91911-3	69690	**226537-3**	**51563-3**	**51565-3**	1-332057-0
26 (Shielded, 0.75 [1.91] Max. O.D.)	0.12-0.15	69656-3	—	69690-3	**226537-1**	—	**51565-1**	1-332057-0

*Includes bench mount and foot control.
Extraction Tool 305183
Note: A ferrule is required for each pin and socket.

Note: Part Numbers are RoHS compliant except: ♦ Indicates non-RoHS compliant.

Catalog 1307191
Revised 3-07

www.tycoelectronics.com

Dimensions are in millimeters and inches unless otherwise specified. Values in brackets are standard equivalents.

Dimensions are shown for reference purposes only. Specifications subject to change.

USA: 1-800-522-6752
Canada: 1-905-470-4425
Mexico: 01-800-733-8926
C. America: 52-55-1106-0803

South America: 55-11-2103-6000
Hong Kong: 852-2735-1628
Japan: 81-44-844-8013
UK: 44-8706-080-208

SIEMAX Connectors

Applications

- **Multiplex Systems**
- **Base Stations**
- **High Density Systems**

Product Facts

- **Multi Coax Surface Mount**
- **Maximum packaging density**
- **Component placement on both sides of PCB**
- **Fully automated assembly (pick-and-place)**
- **Modular design**

Technical Data

- **Interface: Series 1.0/2.3**
- **Impedance: 75Ω**
- **International specifications: IEC 169-29 and CECC 22 230**
- **Frequency range up to 2 GHz**
- **Compact grid pitch 10 [0.39]**
- **Guaranteed coplanarity of max. 0.1 [0.004]**
- **Integrated positioning pins for manual placement**
- **Optional mechanical securing**



SIEMAX connectors combine the benefits of surface mount technology and modular design. This multi coax connector is packaged in tape-and-reel for automatic placement, has optimum solder joints and 100% reflow suitability. This connector is ideal for systems requiring superior packaging density because it can be placed on both sides of the printed circuit board.

The modular design provides flexibility in terms of the number of poles offered (two- or three-poles). It can be stacked, enabling any required configuration to be produced. The SIEMAX connector also allows the use of any other connector series, e.g. SMB, is resistant to high temperatures, and is robust, with reliably sustained coplanarity.

For General Information on Series 1.0/2.3 Connectors, see Page 129.

Catalog 1307191
Revised 3-07

www.tycoelectronics.com

Dimensions are in millimeters and inches unless otherwise specified. Values in brackets are standard equivalents.

Dimensions are shown for reference purposes only. Specifications subject to change.

USA: 1-800-522-6752
Canada: 1-905-470-4425
Mexico: 01-800-733-8926
C. America: 52-55-1106-0803

South America: 55-11-2103-6000
Hong Kong: 852-2735-1628
Japan: 81-44-844-8013
UK: 44-8706-080-208

SIEMAX Connectors, Series 1.0/2.3 (75 Ohm)

SIEMAX Connector, SMT Right-Angle Jack, 2 Poles

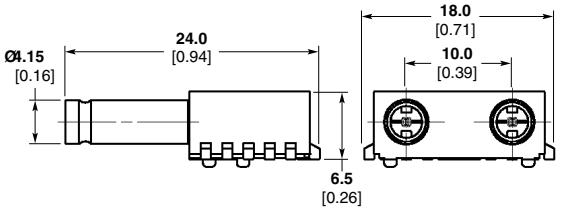

Coupling type*	Part No.
C, F	6-1393696-2

*For coupling type see DIN 1.0/2.3 Section.

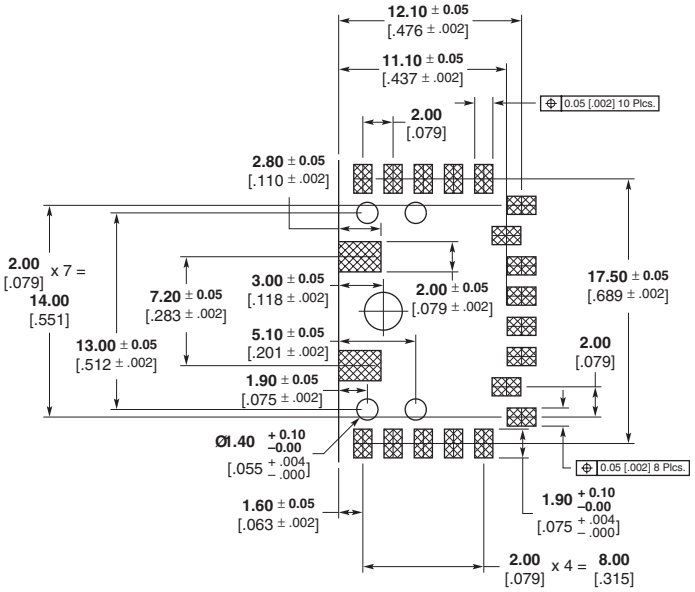

PC Board Layout

SIEMAX Connector, SMT Right-Angle Jack, 3 Poles

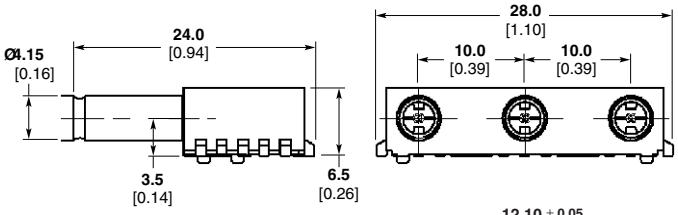

Coupling type*	Part No.
C, F	6-1393696-7

*For coupling type see DIN 1.0/2.3 Section.

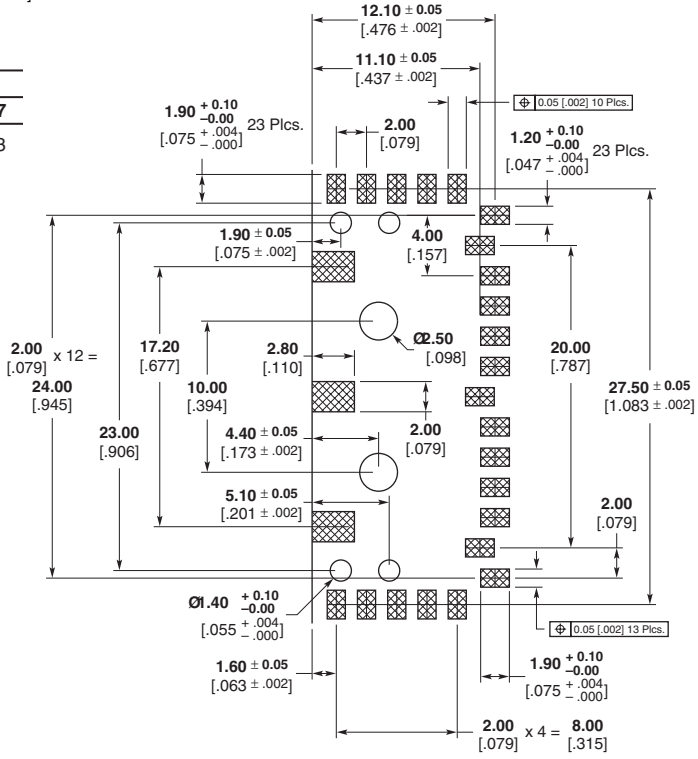

PC Board Layout

Note: Part Numbers are RoHS compliant except: ♦ Indicates non-RoHS compliant.

Catalog 1307191
Revised 3-07

www.tycoelectronics.com

Dimensions are in millimeters and inches unless otherwise specified. Values in brackets are standard equivalents.

Dimensions are shown for reference purposes only. Specifications subject to change.

USA: 1-800-522-6752
Canada: 1-905-470-4425
Mexico: 01-800-733-8926
C. America: 52-55-1106-0803

South America: 55-11-2103-6000
Hong Kong: 852-2735-1628
Japan: 81-44-844-8013
UK: 44-8706-080-208

Between Series Adapters

Between Series Coaxial Transmission Line Adapters provide convenient transitions between popular series coaxial connectors. The adapter design provides a minimum length consistent with good electrical performance. The small size, low VSWR, and broad frequency coverage permits a wide range of applications in both measurement and systems use.

Design and Construction

The standard units are constructed of stainless steel with passivated finish, nickel plated brass, and gold plated brass. The material and plating is to be consistent with the basic connector series. All dielectrics are TFE fluorocarbon. The center contacts are made of beryllium copper, gold plated.

Types

The straight in-line adapters are available in many combinations of plug and jack (male and female) configurations. Also, popular panel mount versions are cataloged. For special modifications and hermetic seal version, consult Tyco Electronics.

Application

The major application is the requirement for a low VSWR, compact transition in both test system and operating systems. Many panel mount and bulkhead mount versions are available so the designer can use small size connectors for internal design, but adapt to a larger rugged version for external connection.

Selection charts follow to help you find the correct adapter for your application.

Plug-Plug

	N Series	OSP	OSP Bulkhead	BNC	7-16	SMB	SMA	SMP	SSMT	Series 1.0/2.3	QMA
MCX							Page 253				
N Series					Page 253						
BNC						Page 253					
Series 1.6/5.6				Page 253						Page 253	
SMA/SMA 18 GHz	Page 253	Page 253	Page 253			Page 253		Page 253	Page 253		Page 253

Jack-Jack

	MCX	N Series N Series Flange Mount N Series Bulkhead	OSP OSP Bulkhead OSP Floating Rear Mount	BNC BNC Bulkhead	TNC TNC Flange Mount TNC Bulkhead	7-16	SMB 75 OHM SMB	SMP	SSMT	Series 1.0/2.3	Series 1.6/5.6
N Series						Page 254					
BNC							Page 254				Page 256
TNC		Page 254		Page 254							
SMA SMA Bulkhead SMA 18 GHz	Page 254	Page 254 and 255	Page 255 and 256	Page 254	Page 254 and 255		Page 255	Page 255	Page 255		
Series 1.0/2.3											Page 256

Catalog 1307191
Revised 3-07

www.tycoelectronics.com

Dimensions are in millimeters and inches unless otherwise specified. Values in brackets are standard equivalents.

Dimensions are shown for reference purposes only. Specifications subject to change.

USA: 1-800-522-6752
Canada: 1-905-470-4425
Mexico: 01-800-733-8926
C. America: 52-55-1106-0803

South America: 55-11-2103-6000
Hong Kong: 852-2735-1628
Japan: 81-44-844-8013
UK: 44-8706-080-208

Between Series Adapters (Continued)

Jack-Plug

	7 mm	7 mm best VSWR	MCX	N Series N Series Flange Mount	OSP OSP Bulkhead	BNC	TNC	SMB	SMA SMA Flange Mount SMA 18 GHz	SMP	SSMT	DIN-Series 1.0/2.3	DIN-Series 1.6/5.6	UMCC
7 mm				Page 256	Page 256		Page 256		Page 256					
7 mm best VSWR				Page 256			Page 256							
MCX									Page 256					
N Series N Series Flange Mount	Page 256	Page 257				Page 257	Page 257		Page 257					
OSP OSP Bulkhead	Page 257								Page 257					
BNC				Page 257				Page 257	Page 257				Page 259	
TNC TNC Flange Mount	Page 258	Page 258		Page 258					Page 258					
SMB 75 OHM SMB				Page 259					Page 258					
SMA SMA Flange Mount SMA 18 GHz	Page 259		Page 258	Page 258 and 259	Page 260	Page 258	Page 259	Page 259		Page 259	Page 259			Page 259
SMP									Page 260					
SSMT									Page 260					
DIN-Series 1.0/2.3													Page 260	
DIN-Series 1.6/5.6						Page 259						Page 260		
QMA									Page 260					
UMCC									Page 260					

Catalog 1307191
Revised 3-07

www.tycoelectronics.com

Dimensions are in millimeters and inches unless otherwise specified. Values in brackets are standard equivalents.

Dimensions are shown for reference purposes only. Specifications subject to change.

USA: 1-800-522-6752
Canada: 1-905-470-4425
Mexico: 01-800-733-8926
C. America: 52-55-1106-0803

South America: 55-11-2103-6000
Hong Kong: 852-2735-1628
Japan: 81-44-844-8013
UK: 44-8706-080-208

Between Series Adapters (Continued)

Plug-Plug

MCX Plug – SMA Plug

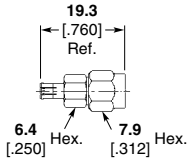

Part No. 1061071-1

7-16 Plug – N Series Plug

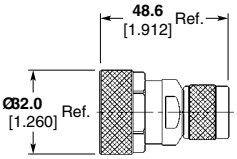

Part No. 1313453-1

BNC Plug – SMB Plug

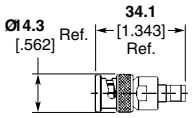

Part No. 1058066-1

SMA 18 GHz Plug – N Series Plug

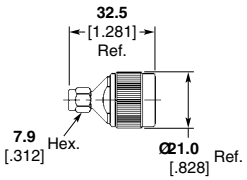

Part No. 1057367-1

SMA Plug – SMB Plug

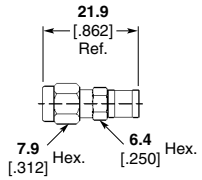

Part No. 1060494-1

SMA Plug – SMP Plug

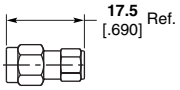

Part No. 1056706-1

SMA Plug – SSMT Plug

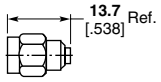

Part No. 1055695-1

SMA Plug – OSP Plug

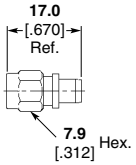

Part No. 1059711-1

Series 1.6/5.6 Plug – Series 1.0/2.3 Plug

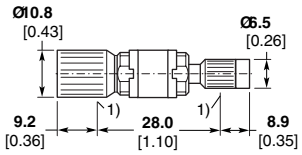

Part No. 2-1393670-1 ♦
Coupling Type A
1) Detent for jack

BNC Plug – Series 1.6/5.6 Plug

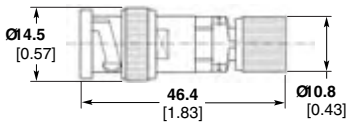

Part No. 1-1393665-4 ♦

QMA Plug – SMA Plug

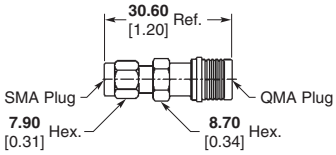

Part No. 1408393-1

Note: Part Numbers are RoHS compliant except: ♦ Indicates non-RoHS compliant.

Catalog 1307191
Revised 3-07

www.tycoelectronics.com

Dimensions are in millimeters and inches unless otherwise specified. Values in brackets are standard equivalents.

Dimensions are shown for reference purposes only. Specifications subject to change.

USA: 1-800-522-6752
Canada: 1-905-470-4425
Mexico: 01-800-733-8926
C. America: 52-55-1106-0803

South America: 55-11-2103-6000
Hong Kong: 852-2735-1628
Japan: 81-44-844-8013
UK: 44-8706-080-208

Between Series Adapters (Continued)

Jack-Jack

7-16 Jack – N Series Jack

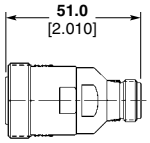

Part No. 1311206-1

BNC Jack – SMB Jack

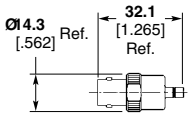

Part No. 1058056-1

BNC Jack – 75 ohm SMB Jack

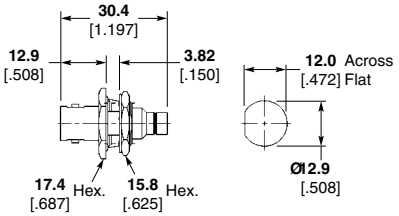

Part No. 1311209-1

TNC Jack – N Series Flange Mount Jack

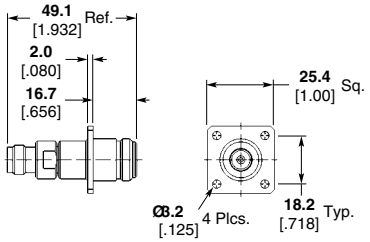

Part No. 1057843-1

TNC Jack – BNC Jack

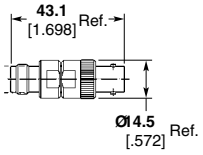

Part No. 1057845-1

MCX Jack – SMA Jack

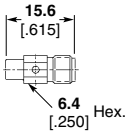

Part No. 1061070-1

SMA Jack – N Series Jack

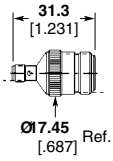

Part No. 1057341-1

SMA Jack – N Series Flange Mount

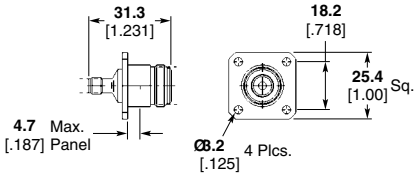

Part No. 1057343-1

SMA Jack – N Series Bulkhead Jack

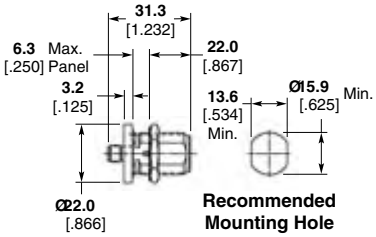

Part No. 1057463-1

SMA Jack – BNC Jack

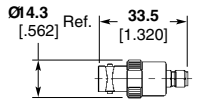

Part No. 1058058-1

BNC Bulkhead Jack – SMA Jack

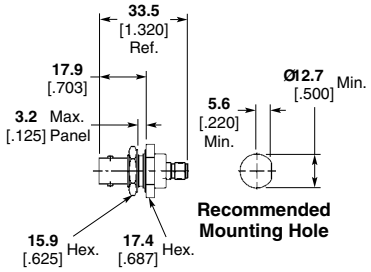

Part No. 1058117-1

TNC Flange Mount Jack – SMA Jack

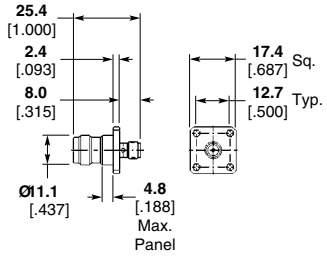

Part No. 1057841-1

Note: Part Numbers are RoHS compliant except: ♦ Indicates non-RoHS compliant.

Catalog 1307191
Revised 3-07

www.tycoelectronics.com

Dimensions are in millimeters and inches unless otherwise specified. Values in brackets are standard equivalents.

Dimensions are shown for reference purposes only. Specifications subject to change.

USA: 1-800-522-6752
Canada: 1-905-470-4425
Mexico: 01-800-733-8926
C. America: 52-55-1106-0803

South America: 55-11-2103-6000
Hong Kong: 852-2735-1628
Japan: 81-44-844-8013
UK: 44-8706-080-208

Between Series Adapters (Continued)

Jack-Jack (Continued)

SMA Jack – TNC Bulkhead Jack

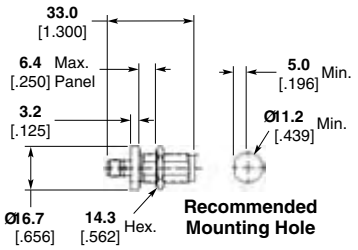

Part No. 1057908-1

SMB Jack – SMA Jack

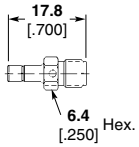

Part No. 1060487-1

SMA Jack – SMP Jack

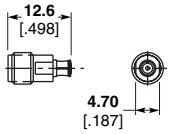

Part No. 1056702-1

SMA Jack – SSMT Jack

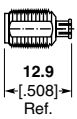

Part No. 1055694-1

OSP Jack – SMA Bulkhead Jack

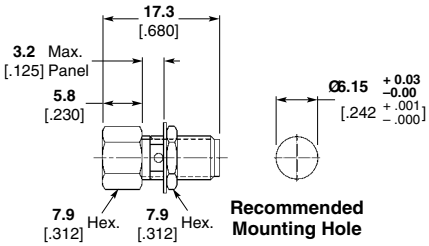

Part No. 1059733-1

SMA 18 GHz Jack – N Series Jack

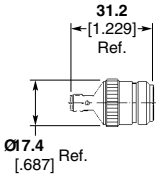

Part No. 1058651-1

SMA 18 GHz Jack – N Series Flange Mount Jack

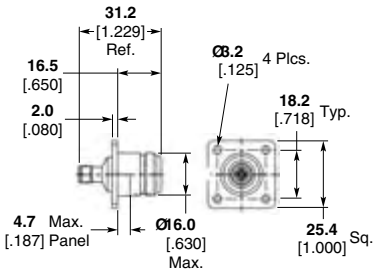

Part No. 1058653-1

SMA 18 GHz Jack – N Series Bulkhead Jack

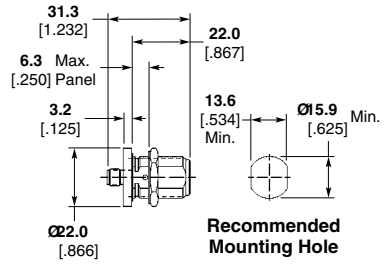

Part No. 1058675-1

OSP Jack – SMA Jack

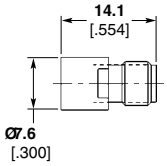

Part No. 1059707-1

SMA Jack – OSP Bulkhead Jack

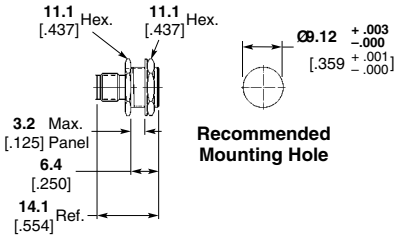

Part No. 1059729-1

OSP Floating Flange Mount Jack – SMA Jack

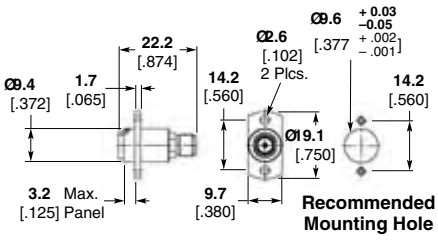

Part No. 1059731-1

SMA Jack – OSP Floating Rear Mount Jack

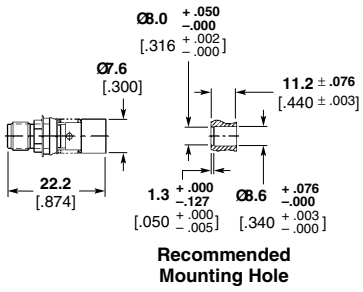

Part No. 1059724-1

Note: Part Numbers are RoHS compliant except: ♦ Indicates non-RoHS compliant.

Catalog 1307191
Revised 3-07

www.tycoelectronics.com

Dimensions are in millimeters and inches unless otherwise specified. Values in brackets are standard equivalents.

Dimensions are shown for reference purposes only. Specifications subject to change.

USA: 1-800-522-6752
Canada: 1-905-470-4425
Mexico: 01-800-733-8926
C. America: 52-55-1106-0803

South America: 55-11-2103-6000
Hong Kong: 852-2735-1628
Japan: 81-44-844-8013
UK: 44-8706-080-208

Between Series Adapters (Continued)

Jack-Jack (Continued)

BNC Jack – Series 1.6/5.6 Jack

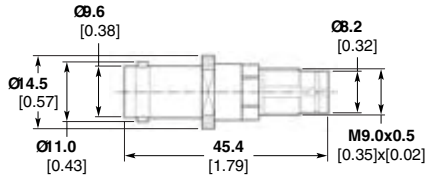

Part No. 1-1393665-5 ♦

Series 1.0/2.3 Jack – Series 1.6/5.6 Jack

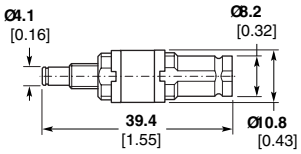

Part No. 2-1393670-4 ♦
Coupling Type A, B, F

Jack-Plug

N Series Plug to 7 mm Jack

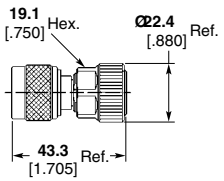

Part No. 1061742-1

OSP Plug to 7 mm Jack

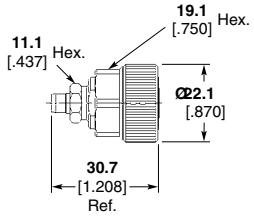

Part No. 1059713-1

TNC Plug to 7 mm Jack

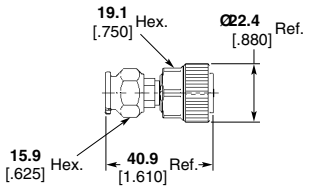

Part No. 1061739-1

SMA Flange Mount Plug to 7 mm Jack

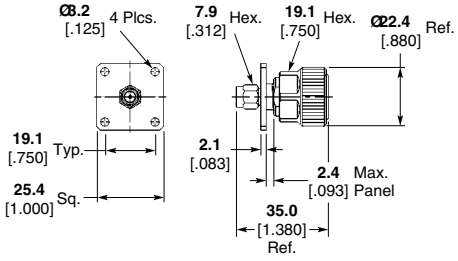

Part No. 1061751-1

SMA Plug to 7 mm Jack

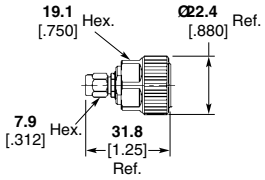

Part No. 1053646-1

N Series Plug to 7 mm Best VSWR Jack

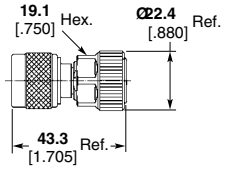

Part No. 1061738-1

TNC Plug to 7 mm Best VSWR Jack

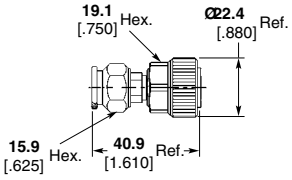

Part No. 1061744-1

MCX Jack – SMA Plug

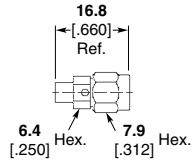

Part No. 1061073-1

N Series Jack – 7 mm Plug

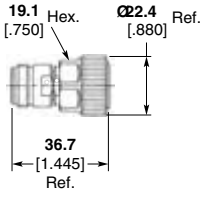

Part No. 1061757-1

Note: Part Numbers are RoHS compliant except: ♦ Indicates non-RoHS compliant.

Catalog 1307191
Revised 3-07

www.tycoelectronics.com

Dimensions are in millimeters and inches unless otherwise specified. Values in brackets are standard equivalents.

Dimensions are shown for reference purposes only. Specifications subject to change.

USA: 1-800-522-6752
Canada: 1-905-470-4425
Mexico: 01-800-733-8926
C. America: 52-55-1106-0803

South America: 55-11-2103-6000
Hong Kong: 852-2735-1628
Japan: 81-44-844-8013
UK: 44-8706-080-208

Between Series Adapters (Continued)

Jack-Plug (Continued)

N Series Jack – 7 mm Best VSWR Plug

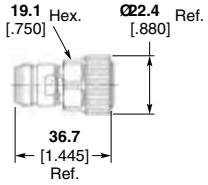

Part No. 1061752-1

BNC Plug – N Series Jack

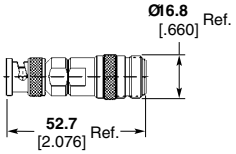

Part No. 1057392-1

N Series Jack – TNC Plug

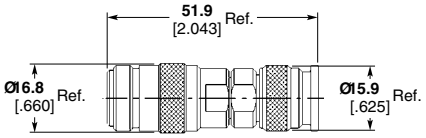

Part No. 1057388-1

SMA Plug – N Series Jack

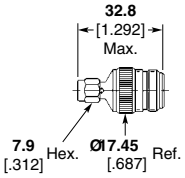

Part No. 1057381-1

SMA 18 GHz Plug – N Series Jack

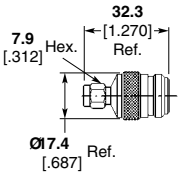

Part No. 1058664-1

SMA Plug – N Series Flange Mount Jack

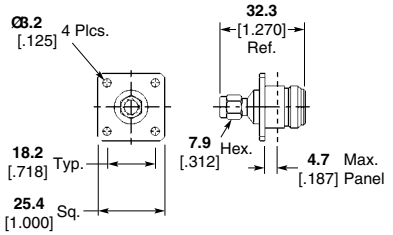

Part No. 1057385-1

OSP Jack – 7 mm Plug

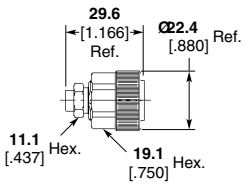

Part No. 1059720-1

SMA Plug – OSP Jack

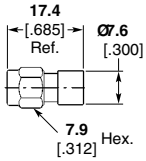

Part No. 1059718-1

SMA Plug – OSP Bulkhead Jack

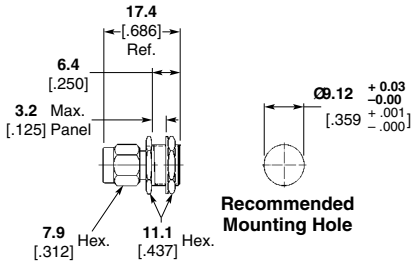

Part No. 1059758-1

BNC Jack – N Series Plug

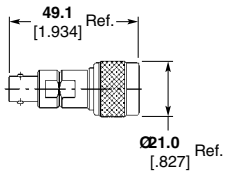

Part No. 1057390-1

BNC Jack – SMB Plug

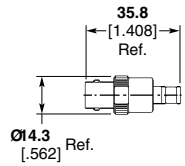

Part No. 1058077-1

SMA Plug – BNC Jack

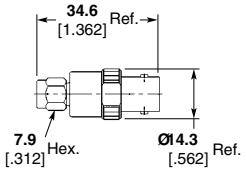

Part No. 1058083-1

Note: Part Numbers are RoHS compliant except: ♦ Indicates non-RoHS compliant.

Catalog 1307191
Revised 3-07

www.tycoelectronics.com

Dimensions are in millimeters and inches unless otherwise specified. Values in brackets are standard equivalents.

Dimensions are shown for reference purposes only. Specifications subject to change.

USA: 1-800-522-6752
Canada: 1-905-470-4425
Mexico: 01-800-733-8926
C. America: 52-55-1106-0803

South America: 55-11-2103-6000
Hong Kong: 852-2735-1628
Japan: 81-44-844-8013
UK: 44-8706-080-208

Between Series Adapters (Continued)

Jack-Plug (Continued)

TNC Jack – 7 mm Plug

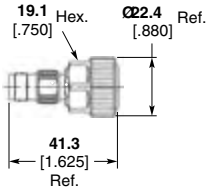

Part No. 1061753-1

TNC Jack – 7 mm Best VSWR Plug

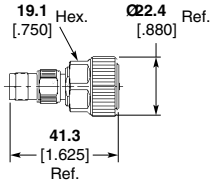

Part No. 1061758-1

TNC Jack – N Series Plug

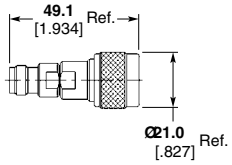

Part No. 1057387-1

TNC Flange Mount Jack – SMA Plug

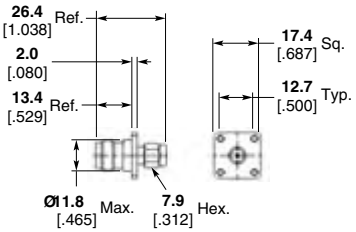

Part No. 1057857-1

SMA Plug – SMB Jack

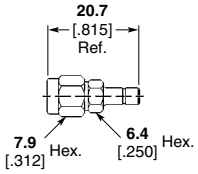

Part No. 1060500-1

SMA Jack – MCX Plug

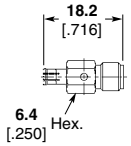

Part No. 1061072-1

SMA 18 GHz Jack – N Series Plug

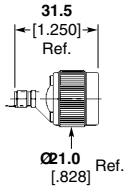

Part No. 1057377-1

SMA Jack – BNC Plug

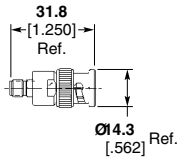

Part No. 1058081-1

TNC Plug – SMA Jack

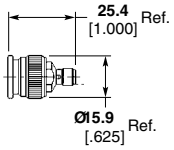

Part No. 1057853-1

SMA Jack – SMB Plug

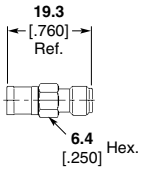

Part No. 1060498-1

SMA Jack – SMP Plug



Part No. 1056707-1

SMA Jack – SSMT Plug

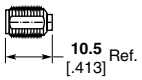

Part No. 1055696-1

Note: Part Numbers are RoHS compliant except: ♦ Indicates non-RoHS compliant.

Catalog 1307191
Revised 3-07

www.tycoelectronics.com

Dimensions are in millimeters and inches unless otherwise specified. Values in brackets are standard equivalents.

Dimensions are shown for reference purposes only. Specifications subject to change.

USA: 1-800-522-6752
Canada: 1-905-470-4425
Mexico: 01-800-733-8926
C. America: 52-55-1106-0803

South America: 55-11-2103-6000
Hong Kong: 852-2735-1628
Japan: 81-44-844-8013
UK: 44-8706-080-208

Between Series Adapters (Continued)

Jack-Plug (Continued)

SMA Jack – UMCC Plug

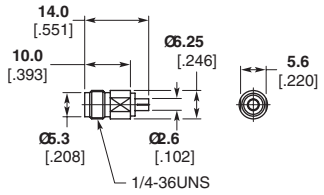

Part No. 1775229-1

SMA Jack – UMCC Plug

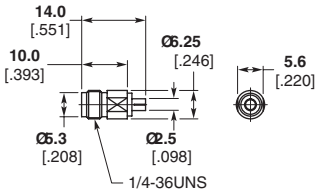

Part No. 1775230-1

SMA Flange Mount Jack – 7 mm Plug

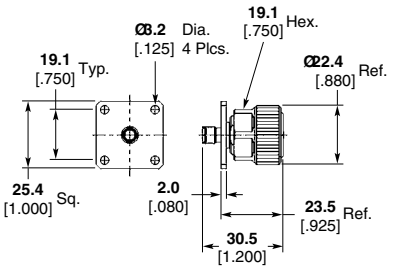

Part No. 1061750-1

SMA 18 GHz Jack – 7 mm Plug

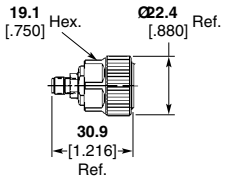

Part No. 1053788-1

N Series Flange Mount Plug – SMA 18 GHz Jack

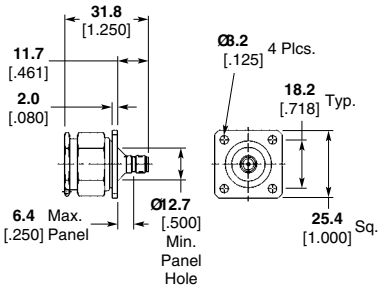

Part No. 1058666-1

OSP Plug – SMA Jack

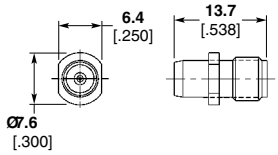

Part No. 1059716-1

SMA 18 GHz Jack – OSP Bulkhead Plug

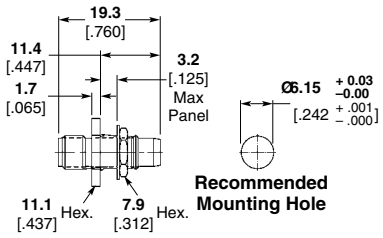

Part No. 1059756-1

SMP Jack – SMA Plug

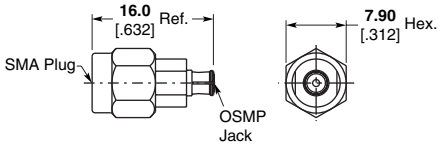

Part No. 1056708-1

SSMT Jack – SMA Plug

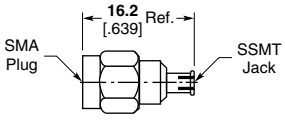

Part No. 1055697-1

BNC Jack – Series 1.6/5.6 Plug

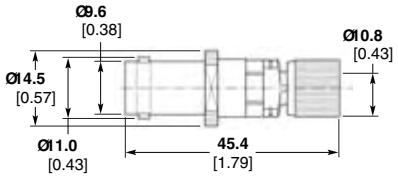

Part No. 1-1393665-7♦

BNC Plug – Series 1.6/5.6 Jack

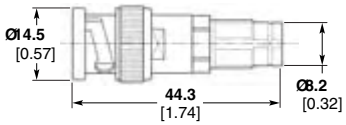

Part No. 1-1393665-6♦

Series 1.6/5.6 Plug – Series 1.0/2.3 Jack

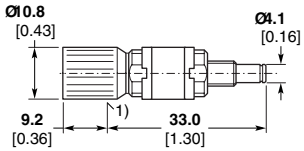

Part No. 2-1393670-2♦
Coupling Type A, B[2], F[2]

Note: Part Numbers are RoHS compliant except: ♦ Indicates non-RoHS compliant.

Catalog 1307191
Revised 3-07

www.tycoelectronics.com

Dimensions are in millimeters and inches unless otherwise specified. Values in brackets are standard equivalents.

Dimensions are shown for reference purposes only. Specifications subject to change.

USA: 1-800-522-6752
Canada: 1-905-470-4425
Mexico: 01-800-733-8926
C. America: 52-55-1106-0803

South America: 55-11-2103-6000
Hong Kong: 852-2735-1628
Japan: 81-44-844-8013
UK: 44-8706-080-208

Between Series Adapters (Continued)

Jack-Plug (Continued)

Series Plug 1.0/2.3 – Series 1.6/5.6 Jack

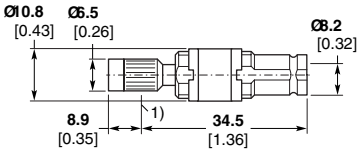

Part No. 2-1393670-3♦
Coupling Type A, B[2], F[2]

1) Detent for jack
2 Only jackside

QMA Jack – SMA Plug

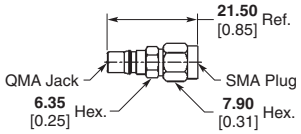

Part No. 1408343-1

UMCC Jack – SMA Plug

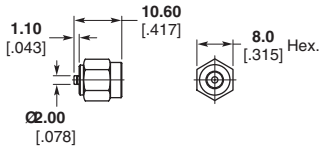

Part No. 1775228-1

UMCC Jack – SMA Plug

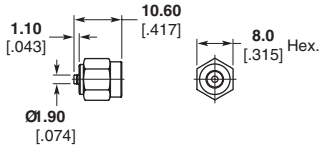

Part No. 1775227-1

Note: Part Numbers are RoHS compliant except: ♦ Indicates non-RoHS compliant.

Catalog 1307191
Revised 3-07

www.tycoelectronics.com

Dimensions are in millimeters and inches unless otherwise specified. Values in brackets are standard equivalents.

Dimensions are shown for reference purposes only. Specifications subject to change.

USA: 1-800-522-6752
Canada: 1-905-470-4425
Mexico: 01-800-733-8926
C. America: 52-55-1106-0803

South America: 55-11-2103-6000
Hong Kong: 852-2735-1628
Japan: 81-44-844-8013
UK: 44-8706-080-208

Coaxial Terminations

SMA Plug Terminator
Part Number 1460802

Plating — Gold
Frequency — 6 GHz



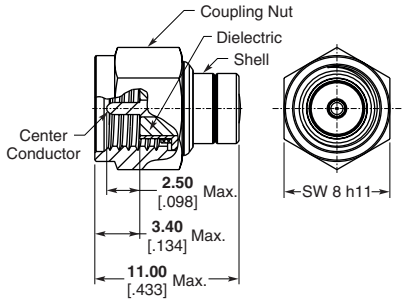

SMC Plug Terminator
Part Number 1460803

Plating — Gold
Frequency — 6 GHz



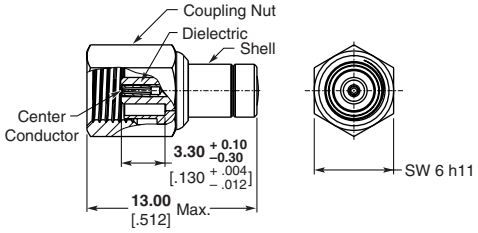

Push Pull Plug Terminator
Part Number 619219

Plating — Gold
Frequency — 6 GHz



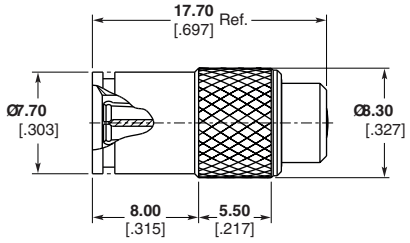

QMA Plug Terminator
Part Number 619271-1
Single Packaging
Plating — Standard Gold
Part Number 5-619271-1
1000 Pieces per Pack
Plating — Standard Gold
Part Number 619271-2
Single Packaging
Plating — Higher Gold
Part Number 5-619271-2
1000 Pieces per Pack
Plating — Higher Gold



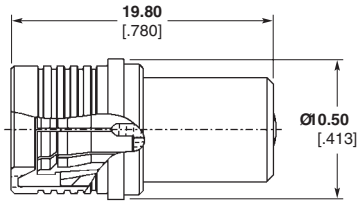

Note: Part Numbers are RoHS compliant except: ♦ Indicates non-RoHS compliant.

Catalog 1307191
Revised 3-07

www.tycoelectronics.com

Dimensions are in millimeters and inches unless otherwise specified. Values in brackets are standard equivalents.

Dimensions are shown for reference purposes only. Specifications subject to change.

USA: 1-800-522-6752
Canada: 1-905-470-4425
Mexico: 01-800-733-8926
C. America: 52-55-1106-0803

South America: 55-11-2103-6000
Hong Kong: 852-2735-1628
Japan: 81-44-844-8013
UK: 44-8706-080-208

Application Tooling

Installation Kit
Part No. 1055469-1
For TNC Connectors



For installation of TNC Series connectors to 3.66 [.141] and 2.16 [.085] diameter semi-rigid cable. Most BNC Series connectors can also be assembled using this kit. See appropriate assembly procedure for specific tooling. This kit contains:

Description	Model No.	NSN	Part No.
Center Contact Holder	T-4580	—	**1055474-1**
Fixture Sub-Assembly	T-4567	—	**1055439-1**
Inserts – 2.16 [.085] (2)	T-4700-2	5120-00-132-6808	**1055441-1**
Inserts – 3.66 [.141] (2)	T-4700-1	5120-00-132-6807	**1055440-1**
Locator Tool	T-4596	—	**1055476-1**
Locator Tool	T-4574	—	**1055477-1**
Solder Gage .813 [.032]	T-4562-6	—	**1055475-1**

All Tools May Be Purchased Separately.

Catalog 1307191
Revised 3-07

www.tycoelectronics.com

Dimensions are in millimeters and inches unless otherwise specified. Values in brackets are standard equivalents.

Dimensions are shown for reference purposes only. Specifications subject to change.

USA: 1-800-522-6752
Canada: 1-905-470-4425
Mexico: 01-800-733-8926
C. America: 52-55-1106-0803

South America: 55-11-2103-6000
Hong Kong: 852-2735-1628
Japan: 81-44-844-8013
UK: 44-8706-080-208

Application Tooling (Continued)

Solder Assembly Kit Brass SMA Connectors

Kit Part Number 1055420-1

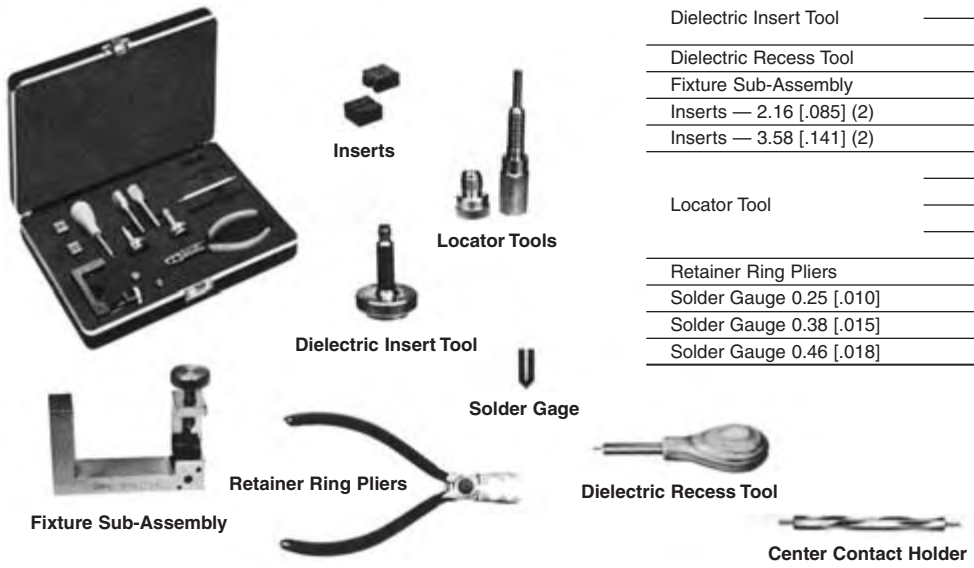

Item Description	Part No.
Center Contact Holder	**1055454-1**
Dielectric Insert Tool	**1055448-1**
	1055447-1
Dielectric Recess Tool	**1055450-1**
Fixture Sub-Assembly	**1055439-1**
Inserts — 2.16 [.085] (2)	**1055441-1**
Inserts — 3.58 [.141] (2)	**1055440-1**
Locator Tool	**1055442-1**
	1055443-1
	1055446-1
	1055451-1
Retainer Ring Pliers	**1055449-1**
Solder Gauge 0.25 [.010]	**1055500-1**
Solder Gauge 0.38 [.015]	**1055445-1**
Solder Gauge 0.46 [.018]	**1055444-1**

Universal Compression Crimp Tool

Kit Part Number 1055835-1

Tyco Electronics Universal Compression Crimp Tool offers the ability to rapidly produce cable assemblies using solderless compression crimp connectors with semi-rigid cables. This universal assembly tool kit will attach SMA, OSP, N and TNC series connectors to 3.58 [.141], 2.16 [.085] and 6.35 [.250] cable quickly and consistently with excellent mechanical and electrical results.

The tool kit permits single hand assembly. Anvils and cable supports can be quickly changed. Crimp lengths can be adjusted from .025 [.001] to 25.4 [1.000] in increments of .025 [.001]. Sharp radius bends in cables are easily accommodated. The kit contains:



Description	Part No.
Crimp Frame	**1055831-1**
Calibration Gauge	**1055832-1**
3.58 [.141] Cable Support	**1055833-1**
2.16 [.085] Cable Support	**1055834-1**
SMA Plug Anvil	**1055836-1**
SMA Jack Anvil	**1055837-1**
Type N Plug Anvil	**1055838-1**
Type N Jack Anvil	**1055839-1**
TNC Plug Anvil	**1055840-1**
TNC Jack Anvil	**1055841-1**
OSP Plug Anvil	**1055842-1**
OSP Jack Anvil	**1055843-1**

All tools may be purchased separately.

Catalog 1307191
Revised 3-07

www.tycoelectronics.com

Dimensions are in millimeters and inches unless otherwise specified. Values in brackets are standard equivalents.

Dimensions are shown for reference purposes only. Specifications subject to change.

USA: 1-800-522-6752
Canada: 1-905-470-4425
Mexico: 01-800-733-8926
C. America: 52-55-1106-0803

South America: 55-11-2103-6000
Hong Kong: 852-2735-1628
Japan: 81-44-844-8013
UK: 44-8706-080-208

Application Tooling (Continued)

Crimping Tools

Crimping tools are used for assembling coaxial connectors on coaxial cables. They can be applied particularly economically for small batch sizes.

The crimping dies are a fixed part of the crimping tools. Each tool is equipped with 2 or 3 different profiles. A total of 6 widths across flats are possible with 2 tools, whose hand lengths are adapted to the dimensions of the hexagon profiles. The tools can be distinguished at a glance by different colored handles.



Item	Width Across Flats of the Profile			Dim. L	Color of handles	Part No.
	1	2	3			
Crimping Tool	**2.8** 0.11	**3.2** 0.13	**3.6** 0.14	**214.0** 8.43	Green	**1393524-4**
Crimping Tool	**2.8** 0.11	**5.4** 0.21	**4.5** 0.18	**260.0** 10.24	Yellow	**1393524-5**

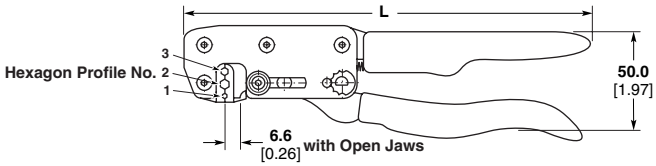

IDC Tool

For assembling IDC coaxial connectors Series 1.6/5.6 mS on coaxial cables.

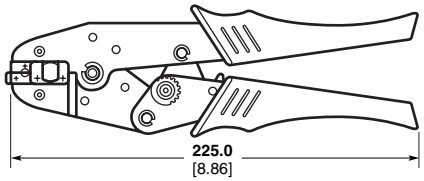

Part No.
1-1393524-1

Removal Tool

For replacing the special contacts on connectors DIN 41612 M and SIEDECON.

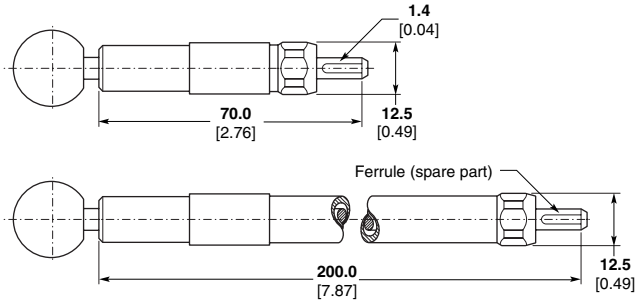

Item	Part No.
Removal tool length 70 [2.76] length 200 [7.87]	 **2-1393524-4** **2-1393524-6**
Spare part Ferrule	 **2-1393524-7**

Catalog 1307191
Revised 3-07

www.tycoelectronics.com

Dimensions are in millimeters and inches unless otherwise specified. Values in brackets are standard equivalents.

Dimensions are shown for reference purposes only. Specifications subject to change.

USA: 1-800-522-6752
Canada: 1-905-470-4425
Mexico: 01-800-733-8926
C. America: 52-55-1106-0803

South America: 55-11-2103-6000
Hong Kong: 852-2735-1628
Japan: 81-44-844-8013
UK: 44-8706-080-208

Application Tooling (Continued)

Setting Gauge

Protective Caps/Setting Gauges

The setting gauges are used to position coaxial jacks and pre-mating high-current plugs on male connectors DIN 41612 M if the pins are flow-soldered into PC boards.

The gauges are held by clamping in connector body and protect the blade contacts.

The gauges provide protection
— during transport (if the male connectors have already been removed from the packaging),
— during assembly,
— against soiling,
— during soldering.



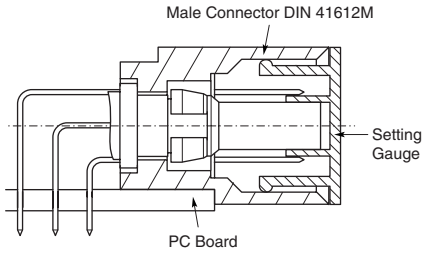

Item		Part No.
Setting gauge for types	M	**1393494-9**
	M/2	**1-1393494-0**
	M/3	**1-1393494-1**

Note: These gauges can also be used to protect types C, C/2, C/3 and D.

Wrench

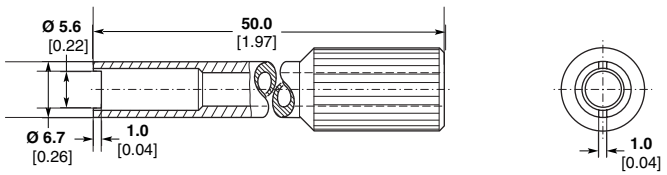

Used to tighten the threaded ring on bulkhead jacks Series 1.0/2.3

Item	Part No.
Wrench	**1393488-3**

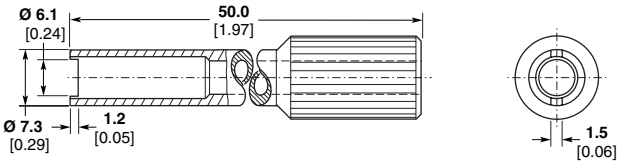

Used to tighten the threaded ring on bulkhead jack 1393670-8.

Item	Part No.
Wrench	**1393488-4**

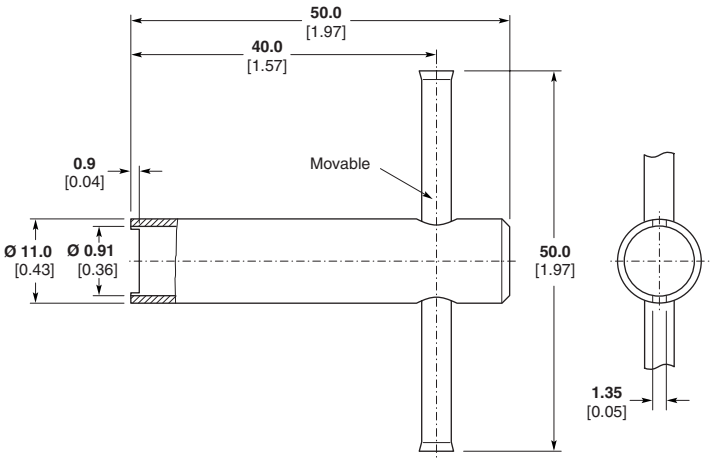

Used to tighten the threaded rings 1-1393562-0 on bulkhead jacks Series 1.6/5.6.

Item	Part No.
Wrench	**1393524-1**

Catalog 1307191
Revised 3-07

www.tycoelectronics.com

Dimensions are in millimeters and inches unless otherwise specified. Values in brackets are standard equivalents.

Dimensions are shown for reference purposes only. Specifications subject to change.

USA: 1-800-522-6752
Canada: 1-905-470-4425
Mexico: 01-800-733-8926
C. America: 52-55-1106-0803

South America: 55-11-2103-6000
Hong Kong: 852-2735-1628
Japan: 81-44-844-8013
UK: 44-8706-080-208

Application Tooling (Continued)

Hand Tools

Tyco Electronics PRO-CRIMPER II Hand Tools are economy versions of our Tyco Electronics CERTI-CRIMP Hand Tools, featuring ratcheted crimp control to provide full die closure and help eliminate partial crimps. With an all new design, the PRO-CRIMPER II hand tools require dramatically less hand force to produce the same connection as comparable tools. Dies are interchangeable. It's the most versatile and reliable crimping tool in the mid-price class. Recommended for networking installations, and commercial, industrial and institutional maintenance work. See Catalog 82276 for further information.

Typical PRO-CRIMPER III Hand Tool



No. 58433-1
for 50 Ohm BNC Dual "O" Crimp Commercial Connectors

Tyco Electronics CERTI-CRIMP Hand Tools are our top-of-the-line crimping tools featuring the original ratcheted crimp control. All tools are designed to exacting specifications, and manufactured using the highest quality materials to provide long service life. Recommended for low production runs, repairs and prototype work, and applications requiring consistent, highly-reliable terminations. See Catalog 65780 for further information.

Typical CERTI-CRIMP Hand Tools with Integral (Non-Interchangeable) Dies

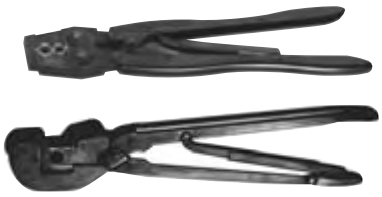

No. 69477-1
for 50 Ohm BNC Dual Crimp MIL Type Connectors

No. 220015-1
for 50 Ohm N Connectors

CERTI-CRIMP Hand Tool with Interchangeable Dies



No. 69710

Pneumatic Tools

The 626 Pneumatic Tool System, as the name implies, will apply a broad range of products in the 6-26 AWG [13-0.12 mm^2] wire range. A basic 626 Pneumatic Tool System requires a power unit, a tool holder, a crimp head assembly and a die set when applicable. This premium system is well suited for low- to medium- volume production and harness assembly operations. Since the crimp head can be rotated to any angle, the operator can also work on more difficult terminations in confined equipment cabinets or enclosures.

Interchangeable tool holder assemblies and crimping heads are available to crimp a variety of products. Crimping heads for the earlier Model 2614 pneumatic power unit can be used with the 626 Pneumatic Tool System. If you are already using Tyco Electronics hand tools, many crimp heads and die sets can be removed, attached to an adapter with quick pins and used with the 626 Pneumatic Tool System. An adapter is even available to accept lower cost die sets of the PRO-CRIMPER II hand tool. For more information, order catalog 124208.



No. 189721-1

Bench Mount Assembly for Pneumatic Tool System (Optional)

Fully adjustable stand allows operator free use of both hands — recommended for maximum productivity.



No. 856402-1

Battery Powered Crimp Tool

Take automatic crimping away from the bench to the product, with this convenient, portable, battery-operated tool. It's at home in the factory or in the field.

- Completely portable—performs about 100 crimps per charge
- Terminates wires to 10 AWG [6 mm^2]
- Weighs only 1.57 kg [3.46 lb] including battery; 360 mm [14.2 in] long
- Pressure-sensitive cycle control
- Kit includes tool, 2 batteries, and charger



Part Number 1725837-1
Part Number 1213890-1
(Open Barrel)

Catalog 1307191
Revised 3-07

www.tycoelectronics.com

Dimensions are in millimeters and inches unless otherwise specified. Values in brackets are standard equivalents.

Dimensions are shown for reference purposes only. Specifications subject to change.

USA: 1-800-522-6752
Canada: 1-905-470-4425
Mexico: 01-800-733-8926
C. America: 52-55-1106-0803

South America: 55-11-2103-6000
Hong Kong: 852-2735-1628
Japan: 81-44-844-8013
UK: 44-8706-080-208

Application Tooling (Continued)

Bench-Mounted Machines

AMP-O-LECTRIC bench-mounted, semi-automatic terminating machines may be used to apply RF products such as Commercial BNC and TNC Connectors, Miniature and Standard UHF Connectors, and Braid-Pic Contacts and Terminals. The Model G unit features interchangeable applicators, and is used to apply strip-form contacts. The "Coax" unit is used to apply loose-piece contacts and ferrules with dies that are mounted onto the machine. See Catalog 65828 and Customer Manual 409-2627 for further information.

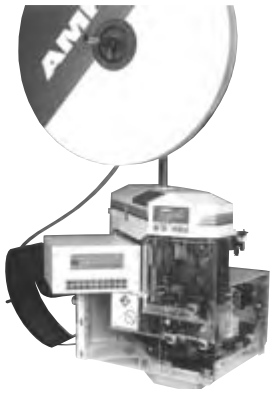

AMP-O-LECTRIC Model G, No. 354500 Series with Tyco Electronics Crimp Quality Monitor

Stripping Tools

The hand-operated Tyco Electronics Coaxial Cable Stripper features interchangeable, color-coded blade cassettes and V-blocks to accommodate 2- or 3-step stripping for cable diameters ranging from 2.54 [.10] through 7.62 [.30]. You strip cable by simply clamping and rotating the tool around the cable. See Instruction Sheet IS 2766 for further information.



For Use With Connector Type	Tool No.
BNC Single Crimp	**603995-1**
BNC Commercial and UHF Miniature	**603995-2**
UHF Standard	**603995-3**
BNC MIL Type Dual Crimp	**603995-5**
BNC Commercial Dual Crimp	**603995-6**

Semi-Rigid Cable Tooling

The tools listed here are designed specifically to strip and terminate semi-rigid cable. These tools operate basically the same as the flexible cable tools, in that they produce uniform terminations time after time, without heat damage from soldering.

Hand Tool for BNC and TNC Semi-Rigid Cable Connectors



No. 59980-1 Frame only—does not include dies and locator

Catalog 1307191
Revised 3-07

www.tycoelectronics.com

Dimensions are in millimeters and inches unless otherwise specified. Values in brackets are standard equivalents.

Dimensions are shown for reference purposes only. Specifications subject to change.

USA: 1-800-522-6752
Canada: 1-905-470-4425
Mexico: 01-800-733-8926
C. America: 52-55-1106-0803

South America: 55-11-2103-6000
Hong Kong: 852-2735-1628
Japan: 81-44-844-8013
UK: 44-8706-080-208

Application Tooling (Continued)

Hand Tool Kit for SMA and Blindmate Connectors

No. 59981-1



Item Description	Part Numbers	
	Tyco Electronics	Military (M22520/)
Hand Tool	**59980-1**	**36-01**
Plug Locator (without Center Contact)	**220220-2**	**36-06**
Plug Locator (with Center Contact)	**220221-2**	**36-04**
Jack Locator	**220222-2**	**36-05**
Die Set for RG 402/U Cable (3.58 [.141] O.D.)	**312253-1**	**36-03**
Die Set for RG 405/U Cable (2.18 [.086] O.D.)	**312253-2**	**36-02**
Cutoff Fixture	**311395-1**	**36-09**
Cable Dressing Fixture	**311396-1**	**36-07**
Trimmer Tool	**312317-1**	**36-08**
Cable Bend Fixture Assembly Includes following 6 items:	**220224-1**	**36-10**
Bend Segment, RG 402/U (3.18 [.125] Radius)	**311386-1**	**36-11**
Bend Segment, RG 402/U (6.35 [.250] Radius)	**311386-2**	**36-12**
Bend Segment, RG 405/U	**311386-3**	**36-13**
Tool Holder	**311392-1**	—
Limiting Pin	**307581-1**	—
Conforming Block	**312067-1**	—
Hex Wrench	**21027-6**	—
Carrying Case	**13126-1**	—
Insert, Case	**13127-1**	—

Pneumatic Tool for Terminating BNC, TNC, SMA and Blindmate Connectors

(for RG 402/U and RG 405/U Cable)

No. 58318-1*



This pneumatic tool is a bench-mounted, semi-automatic power tool designed for easy operation. The operator needs only to depress the trigger to complete a termination. It is used with the cable preparation machine to produce finished terminations.

*Includes Locators 220241-1 and 308075-2. Dies are not included.

Catalog 1307191
Revised 3-07

www.tycoelectronics.com

Dimensions are in millimeters and inches unless otherwise specified. Values in brackets are standard equivalents.

Dimensions are shown for reference purposes only. Specifications subject to change.

USA: 1-800-522-6752
Canada: 1-905-470-4425
Mexico: 01-800-733-8926
C. America: 52-55-1106-0803

South America: 55-11-2103-6000
Hong Kong: 852-2735-1628
Japan: 81-44-844-8013
UK: 44-8706-080-208

Cable Assembly Capabilities



When your RF application demands a high performance cable assembly, make Tyco Electronics your advantage. We specialize in solving tough problems with assemblies designed and manufactured to the most demanding requirements. Why Tyco Electronics? Quite simply, because we can give you a comprehensive engineered solution to your application needs. By providing a precise match between cable, connector and application, we supply cable assemblies that meet your exact needs.

Every cable assembly application is unique. A Tyco Electronics custom solution can be designed to meet your special requirements — whether these are related to return and insertion loss, propagation delay and phase matching, shielding and EMI, or special mechanical issues like density, latching, appearance, flexibility, or even weight. We approach your cable assembly individually, using the vast resources and knowledge gained from years of experience generating custom solutions. By making Tyco Electronics your partner in cable assembly design, you reduce risk and gain the assurance that you will receive assembly on time, to specification and within your budget.

Tyco Electronics offers a wide range of RF/Coax Cable assemblies including 50 and 75 Ohm solutions, from micro-miniature UMCC and SSMT to high power assemblies using N-Series and DIN 7/16 connectors. Furthermore, we use a variety of cable types to meet unique requirements from standard military qualified RG cable to low loss foamed PE and PTFE tape wrapped cable as well as semi-rigid. Our engineering experts will find the right combination of materials to provide a solution that is cost effective.

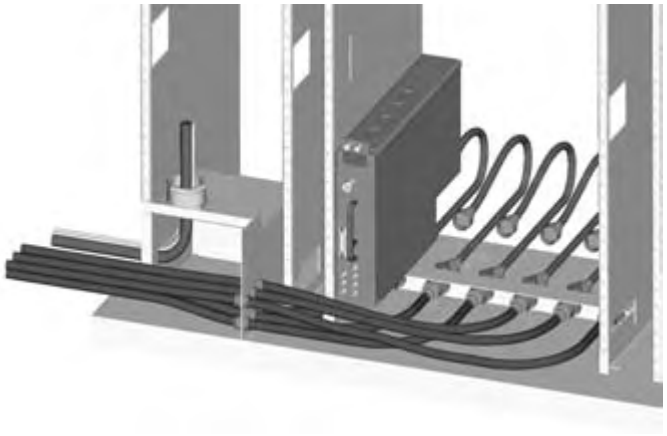

Catalog 1307191
Revised 3-07

www.tycoelectronics.com

Dimensions are in millimeters and inches unless otherwise specified. Values in brackets are standard equivalents.

Dimensions are shown for reference purposes only. Specifications subject to change.

USA: 1-800-522-6752
Canada: 1-905-470-4425
Mexico: 01-800-733-8926
C. America: 52-55-1106-0803

South America: 55-11-2103-6000
Hong Kong: 852-2735-1628
Japan: 81-44-844-8013
UK: 44-8706-080-208

Cable Assembly Capabilities (Continued)



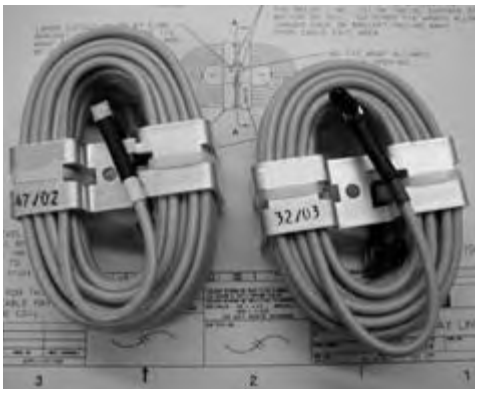

Utilizing network analyzers, TDR, and intermodulation test equipment to mention a few, our testing capability allows extensive electrical and environmental characterization of your assembly. We offer full test capabilities right in our manufacturing facilities. Tests such as those listed below can be an integral part of the manufacturing process:

- VSWR,
- Return Loss,
- Insertion Loss,
- Phase matching,
- Propagation Delay,
- Impedance,
- Passive Intermodulation.

Our cable manufacturing centers are designed to meet your production requirements and delivery needs. Our global locations, combined with Tyco Electronics logistic strengths assures you will get the product where and when you need it.

Harrisburg, PA
Product Management
Product Development
Prototyping, Samples
Diecasting
Stamping
Plating
Cable Assembly

Norwood, MA
Product Development
Screw Machining
Plating
Connector and Cable Assembly, Quick Turn

Ooskampt, Belgium
Product Management
Product Development
Screw Machining
Plating
Assembly

Switzerland
Development Eng.
Screw Machining
Assembly

Tesla, Czech Republic
Connector Assembly

Shenzhen and Hangzhou, China
Connector Assembly

Hermosillo, Mexico
Connector Assembly
Cable Assembly

Taipei, Taiwan
Product Management
Product Development

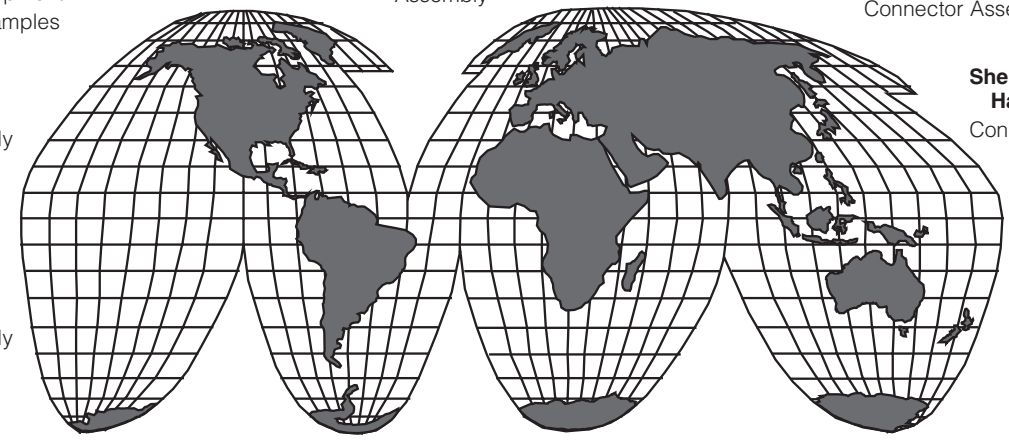

Brazil
Cable Assembly

Shanghai, China
Connector Assembly

Kunshan, China
Product Development
Screw Machining
Connector and Cable Assembly

Catalog 1307191
Revised 3-07

www.tycoelectronics.com

Dimensions are in millimeters and inches unless otherwise specified. Values in brackets are standard equivalents.

Dimensions are shown for reference purposes only. Specifications subject to change.

USA: 1-800-522-6752
Canada: 1-905-470-4425
Mexico: 01-800-733-8926
C. America: 52-55-1106-0803

South America: 55-11-2103-6000
Hong Kong: 852-2735-1628
Japan: 81-44-844-8013
UK: 44-8706-080-208

Coaxial Cable Assembly Specification Guide

Please use this handy reference guide when specifying or building your new cable assembly.

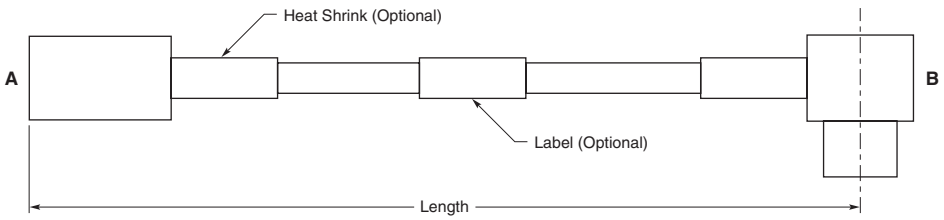

CONNECTOR A

INTERFACE _____
example: BNC, MCX, SMA, etc.

STYLE _____
example: Straight Plug, Right-Angle Plug, Bulkhead Jack, etc.

HEAT SHRINK ❑

MARKING _____

CONNECTOR B

INTERFACE _____
example: BNC, MCX, SMA, etc.

STYLE _____
example: Straight Plug, Right-Angle Plug, Bulkhead Jack, etc.

HEAT SHRINK ❑

MARKING _____

CABLE

LENGTH _____ (inch/mm)

RG TYPE _____

OR

CABLE MFG. _____

MFG. PART NO. _____

OR

FREQUENCY RANGE _____ (MHz/GHz)

IMPEDANCE _____ Ohms

INSERTION LOSS _____ dB

SHIELDING EFFECTIVENESS _____ dB

TEMP. RANGE _____ (°C/°F)

MAX. AVG. POWER HANDLING* _____ Watt
* 25°C at sea level and max. specified frequency

LABEL ❑

MARKING _____
_____
_____

ELECTRICAL SPECIFICATIONS

VSWR _____
OR
RETURN LOSS _____

INSERTION LOSS _____

DELAY _____

INSERTION PHASE _____

INTERMODULATION _____

OTHER SPECIFICATIONS _____
_____
_____

Catalog 1307191
Revised 3-07

www.tycoelectronics.com

Dimensions are in millimeters and inches unless otherwise specified. Values in brackets are standard equivalents.

Dimensions are shown for reference purposes only. Specifications subject to change.

USA: 1-800-522-6752
Canada: 1-905-470-4425
Mexico: 01-800-733-8926
C. America: 52-55-1106-0803
South America: 55-11-2103-6000
Hong Kong: 852-2735-1628
Japan: 81-44-844-8013
UK: 44-8706-080-208

Appendix A - Theory and Application

Theory and Application

As a leading manufacturer of RF products, Tyco Electronics produces a large variety of coaxial connectors. The proper selection and application of these connectors requires a knowledge of factors not involved in other types of connectors and terminals. The following paragraphs have been prepared to improve understanding of the theory behind RF connectors:

Basic RF Theory[1]

RF energy travels by electromagnetic waves, and it is primarily the frequency of these waves that we are interested in. Briefly, if an oscillating voltage source is connected to a cable, a continuous electromagnetic wave will propagate along the cable. A sensor placed at some point on the cable would indicate a varying voltage (E field) as well as a current and magnetic field (H field) as the wave travels past it. This is called an electromagnetic wave because both electric and magnetic fields are varying. The wave shape is initially determined by the variation of the source with time.

Figure 7 shows the radiant energy spectrum. Visible light, radio, television, x-rays and Gamma rays are all phenomenon of electromagnetic waves at different frequencies. This introduction will treat only those that are generated by an electrical source and propagated along a physical cable or other transmission media. That is, frequencies above zero and up to about 50 gigahertz.

[1]The majority of the technical terms, relative to RF and coaxial cable and connectors, used here-in and throughout this catalog are defined in the Glossary (Appendix G) starting on page 301.

Frequency or Wavelengths	Designation	Applications
0 - 29.9 KHz	VLF (Very Low Frequency)	Commercial AC electricity, deep depth sounders, ultrasonic grinders, sonic oscillators
30 - 299.9 KHz	LF (Low sonar Frequency)	Shallow-to-medium depth sounders
300 - 2999.9 KHz	MF (Medium Frequency)	Commercial AM radio broadcasting, marine radio telephone, direction finders
3 - 29.9 MHz	HF (High Frequency)	Citizen band radio, amateur radio, international broadcasting
30 - 299.9 MHz	VHF (Very High Frequency)	VHF television (Channels 2 thru 13), commercial FM radio broadcasting, amateur radio, fire and police radio
300 - 2999.9 MHz	UHF (Ultra-high Frequency)	UHF television (Channels 14 thru 83), microwave ovens, aeronautical radionavigation
3 - 29.9 GHz	SHF (Super High Frequency)	Microwave communications, marine radar, aircraft tracking and airborne radars
30 - 299.9 GHz	EHF (Extremely High Frequency)	Space communications, radio astronomy

Notes:
1. KHz = Kilohertz (1 thousand cycles per second)
2. MHz = Megahertz (1 million cycles per second)
3. GHz = Gigahertz (1 billion cycles per second)

Figure 7

Radiant Energy Spectrum

In the following paragraphs we will discuss waves in greater detail, including the relationship of frequency and wave length, how pulses are formed and used, how each differs from the other and the problems involved in their transmission.

Sine Waves

An RF wave is a sine wave, meaning that it smoothly swings from zero to a positive peak value, then back down past zero to a negative peak value, then back to zero to complete a 360 electrical degree cycle. The positive and negative peaks are always equal in amplitude. The two qualities which characterize this type of wave are amplitude and frequency (f). Figure 8 shows these two characteristics. Amplitude refers to the peak value attained by the wave and corresponds to voltage. Frequency refers to the number of oscillations per second. For example, the sign wave in Figure 8(B) has completed 12 cycles in one second. Therefore, we would say that this wave has a frequency of 12 cycles per second or 12 Hertz. The time for one complete cycle is defined as the period (T). The relationship between the period and frequency is given by the equation:

$$f = 1 / T \text{ in Hertz}$$

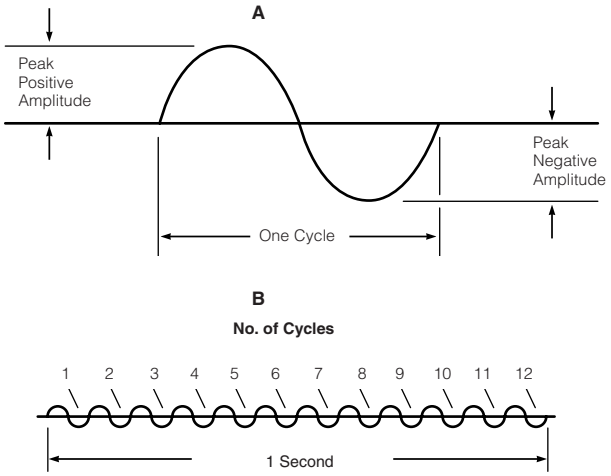

Figure 8

Typical Sine Wave Characteristics

The wave travels away from the generator at speeds approaching the speed of light. When an electromagnetic wave travels in a medium other than air or vacuum, the **speed** for the wave is reduced by a factor of the square root of the dielectric constant (ε. The velocity (v) of the propagation of a signal is given by:

$$v = \frac{c}{\sqrt{\varepsilon}}$$

Where c is the speed of light, 3×10^8 m/sec or 1.18×10^{10} in/sec, and ε is the dielectric constant of the medium. (See Table 1 for dielectric constants of various materials)

The **wavelength** of a signal is given by the formula

$$\lambda = v/f = \frac{c}{\sqrt{\varepsilon} \times f\,(GHz)} \quad \frac{1.18 \times 10^{10}}{\sqrt{\varepsilon} \times f\,(GHz)} \text{ inches}$$

See Figure 9

Catalog 1307191
Revised 3-07

www.tycoelectronics.com

Dimensions are in millimeters and inches unless otherwise specified. Values in brackets are standard equivalents.

Dimensions are shown for reference purposes only. Specifications subject to change.

USA: 1-800-522-6752
Canada: 1-905-470-4425
Mexico: 01-800-733-8926
C. America: 52-55-1106-0803

South America: 55-11-2103-6000
Hong Kong: 852-2735-1628
Japan: 81-44-844-8013
UK: 44-8706-080-208

Appendix A - Theory and Application (Continued)

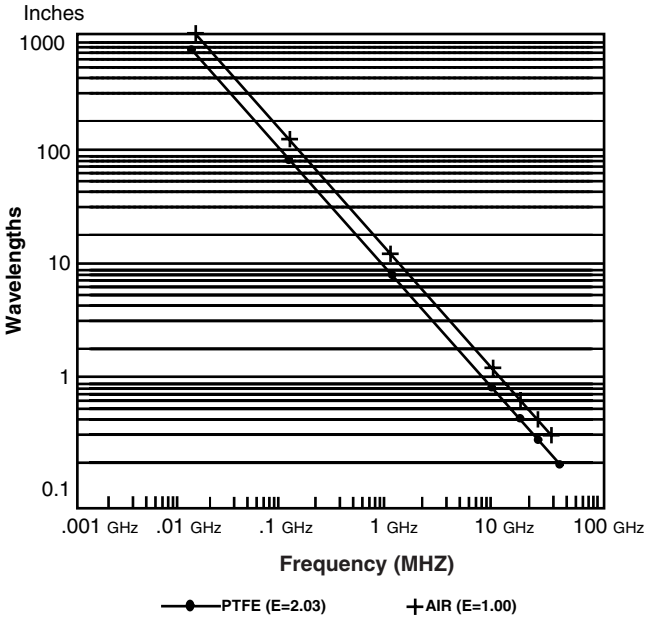

Figure 9

Table 1.
Properties of Insulating Materials

Dielectric Material	Dielectric Constant	Operating Temperature Range
TFE	2.03	-70 +250°C
Polyethylene	2.3	-60 +80°C
Nylon	4.6-4.0	-40 +120°C
TPX	2.12	-65 +85°C
Polypropylene	2.25	-40 +105°C
Acetal	3.7	-65 +85°C

Pulses

The sine wave is most often used for communication purposes where intelligence is imposed on the wave by a variation in amplitude (amplitude modulation, AM) or by a variation in frequency (frequency modulation, FM).

Pulses, on the other hand, are primarily used in computers and digital instrumentation. Since pulses are generally used for triggering purposes, the pulse rise/fall time, amplitude and width are the most important. Figure 10 shows a pulse and identifies these characteristics.

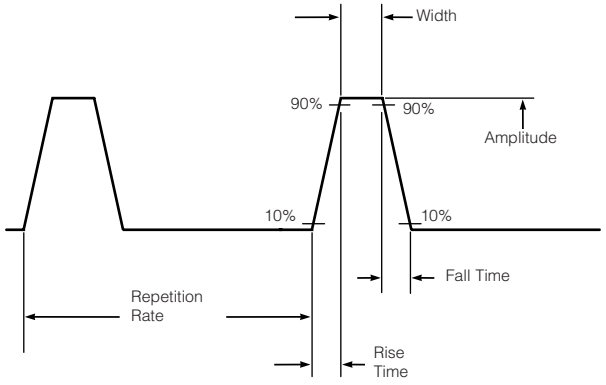

Figure 10

Pulse Characteristics

TPX is a trademark of Mitsui Chemicals America, Inc.

Notice that rise time is the time required for the pulse to rise from 10% to 90% of its amplitude - not from zero to maximum. Rise and fall time is perhaps the single most important characteristic of a pulse in today's high-speed digital equipment. Figure 11 shows that the faster the rise and fall time, the more pulses will fit in a given time frame.

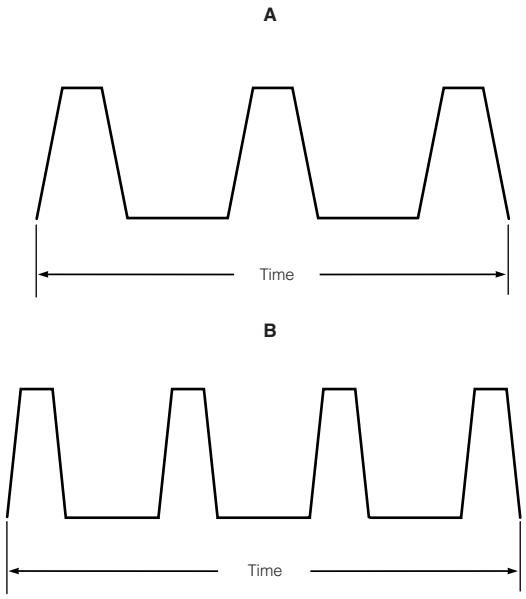

Figure 11

Pulse Rise and Fall Time

The bit rate for a system is the maximum rate of pulses per second that a system can process without causing data errors. The maximum performance can also be specified in terms of baud rate. The baud rate is defined as the number of characters (bytes) that are transmitted per second. Generally a character represents 10 bits (7 bits for the information, one parity bit, and two for start and stop, totalling 10).

Now that we know why fast pulses are required, the next problem is how to obtain faster rise times. A pulse is made up of a great number of different frequencies, and the more high frequencies a pulse contains, the faster will be its rise time and the flatter will be its peak. To better understand this, refer to Figure 12. At A, you will see a fundamental frequency (1), its third harmonic (3), and the resultant waveform (S3), which is a combination of 1 and 3. Although this does not yet resemble a square wave, you will note that the rise time is decreased, and a dip appears at the peak. At B of Figure 12, we have added the fifth harmonic. Rise time is further decreased, and the peak is beginning to flatten out. At C the seventh harmonic has been included, and the resultant wave S7 begins to resemble a square wave. As more high frequency harmonics are added to the waveform, it will more closely resemble a square wave, and the squarer it becomes, the faster will be the rise time.

Catalog 1307191
Revised 3-07

www.tycoelectronics.com

Dimensions are in millimeters and inches unless otherwise specified. Values in brackets are standard equivalents.

Dimensions are shown for reference purposes only. Specifications subject to change.

USA: 1-800-522-6752
Canada: 1-905-470-4425
Mexico: 01-800-733-8926
C. America: 52-55-1106-0803

South America: 55-11-2103-6000
Hong Kong: 852-2735-1628
Japan: 81-44-844-8013
UK: 44-8706-080-208

Appendix A - Theory and Application (Continued)

Fast rise times and short pulse widths require high frequency components.

Two frequent causes of digital signal degradation can be (1) high capacitance of the transmission line and (2) impedence mismatches of connector transmission line or I/0 devices. Selection of an impedance-matched connector on a digital line, especially if short cable assemblies are used, can be as important as connector selection for an RF modulated line. **Reflected pulses out of phase with the original pulse can cause false signals or high error rates in a digital system.**

Since pulses with fast rise times are necessary in high-speed computers, any circuit element which could reduce or attenuate high frequency response is undesirable.

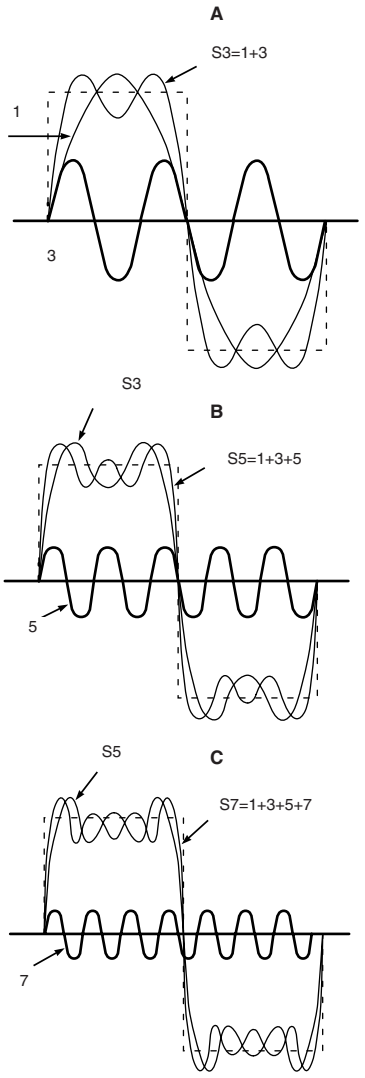

Figure 12

Development of a Square Wave

Signal Integrity and Propagation

To explain how to maintain signal integrity, it is necessary to review how the signal is configured in a cable and how it propagates. Ignoring digital signals for this discussion we will identify the issues that deal with the integrity of a sine wave. Consider a coaxial cable consisting of an inner conductor surrounded by a dielectric material and then an outer conductor (See Figure 13). The outer conductor may be a braid, a foil, or a solid metal.

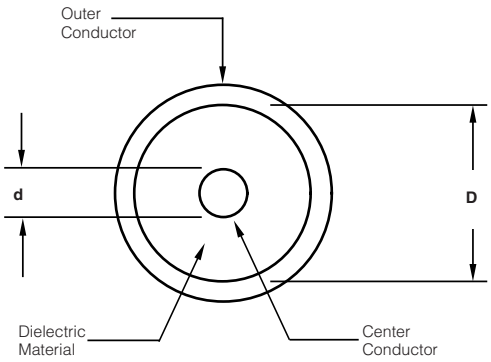

Figure 13

Diagram of a Cable

An electromagnetic wave traveling in a coaxial cable produces an electric and a magnetic field between the inner conductor and the outer conductor (Figure 14). The electric (E field) is radial and varies in time. An alternating current flows along the inner conductor and the outer conductor. An oscillating magnetic field (H field) circles the inner conductor.

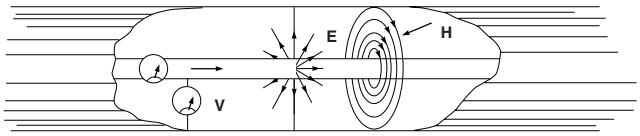

Figure 14

Electric field (E) and magnetic field (H) belonging to the principal mode in a coaxial line.

The alternating current on a conductor is not spread throughout the conductor but is strongest at the surface and decays exponentially at points further into the conductor. This is called the skin effect. At a frequency of 1MHz, three skin depths is 0.0078" (95% of the current is within three skin depths of the surface) and at 10GHz three skin depths is 0.00078". As a result, the current is on the outer surface of the inner conductor and the inner surface of the outer conductor over the entire range of interest for most RF systems. The dimensions and material beyond several skin depths have no effect on the wave; gold plated plastic will propagate as well as gold plated copper at sufficiently high frequencies.

Catalog 1307191
Revised 3-07

www.tycoelectronics.com

Dimensions are in millimeters and inches unless otherwise specified. Values in brackets are standard equivalents.

Dimensions are shown for reference purposes only. Specifications subject to change.

USA: 1-800-522-6752
Canada: 1-905-470-4425
Mexico: 01-800-733-8926
C. America: 52-55-1106-0803

South America: 55-11-2103-6000
Hong Kong: 852-2735-1628
Japan: 81-44-844-8013
UK: 44-8706-080-208

Appendix A - Theory and Application (Continued)

Attenuation

A wave loses energy (attenuates) in several ways: (1) The resistance of the inner and outer conductors is small but can be significant over long lengths and will produce some heat. (2) The dielectric may be lossy; its resistance is high but not infinite, and some energy is lost. (3) Electromagnetic energy radiates at high frequencies; significant energy losses are caused by radiation of electromagnetic energy (the cable acts like an antenna). (4) Energy is reflected due to impedance mismatches. The combination of these four types of losses are referred to as the **insertion loss** of a transmission line system. Connectors have similar losses.

Characteristic Impedance

A parameter which defines the behavior of a cable, connector, or any propagating system is **Characteristic Impedance**, Zo. The characteristic impedance of a lossless cable is related to the inductance per unit length, L, and the capacitance per unit length, C, as follows:

$$Zo = \sqrt{L/C} \text{ in ohms}$$

The equivalent circuit of a transmission line is shown in Figure 15. R represents the conductor resistance for a unit length

For a coaxial cable the characteristic impedance is given by:

$$Zo = \frac{138}{\sqrt{\varepsilon}} \times \text{Log}_{10} \frac{D}{d} \text{ in ohms}$$

where D is the inner diameter of the outer conductor and d is the outer diameter of the inner conductor, respectively. Similar equations apply for other geometries such as two parallel wires.

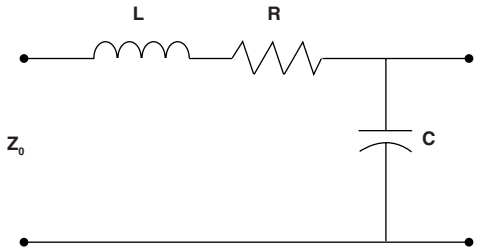

Figure 15

Typical Transmission Line Schematic

The maximum power is transferred between two systems if they have the same impedance. This is called impedance matching. However, impedance variations that are short compared to a wavelength can have a negligible effect on signal loss.

Standard impedances are 50 ohm, 75 ohm and 93-125 ohm. Most systems use 50 ohm because it is a compromise between maximum power transmission and minimum line loss. The telephone industry and the broadcast industry use 75 ohm for minimum line attenuation. The need for low capacitance instrumentation cable has produced the 93-125 ohm systems. The higher impedances are generally achieved by changing the conductor diameters and by modifying the dielectric material to add air.

Reflections

When the characteristic impedance changes in a transmission line system, part of an incident wave is reflected. The reflection coefficient can be calculated as:

$$\text{Reflection Coefficient} = \rho = \frac{V_i}{V_R} = \frac{Z_R - Z_O}{Z_R + Z_O}$$

Where Vi and ZO are the incident voltage and impedance of the first media. V_R and Z_R represent the reflected voltage and impedance of the media that caused the reflection. The decibel loss due to reflection is given by:

$$\text{Return Loss} = 10 \text{ Log}_{10} \left(\frac{1}{1-\rho^2} \right) \text{ dB}$$

VSWR

The traditional way to determine the reflection coefficient is to measure the standing wave caused by the superposition of the incident wave and the reflected wave. Traditionally the voltage is measured at a series of points using a slotted line. The ratio of the maximum divided by the minimum is the Voltage Standing Wave Ratio (VSWR). The VSWR is infinite for total reflections because the minimum voltage is zero. If no reflection occurs the VSWR is 1.0. VSWR and reflection coefficient are related as follows:

$$VSWR = (1 + \rho)/(1 - \rho)$$

Most present instrumentation measures the reflection coefficient and calculates the VSWR.

Figure 16 represents the direct relationship between VSWR and its equivalent in return loss (expressed in dB).

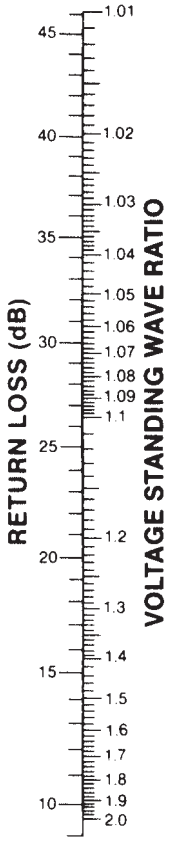

Figure 16

VSWR vs. Return Loss

Multiple Reflections

If there is a series of impedance changes, each one will have a reflection coefficient. The total reflection coefficient is the vector addition of each of the individual coefficients accounting for the distance between reflections and the reflection of any reflected waves. Even though the calculations are difficult, a total VSWR can still be measured.

Multiple reflections can produce a resonance phenomenon that is unique to wave theory. Properly understood some serious difficulties can be avoided. An example will make the point clear. Consider an electromagnetic wave with a

Catalog 1307191
Revised 3-07

www.tycoelectronics.com

Dimensions are in millimeters and inches unless otherwise specified. Values in brackets are standard equivalents.

Dimensions are shown for reference purposes only. Specifications subject to change.

USA: 1-800-522-6752
Canada: 1-905-470-4425
Mexico: 01-800-733-8926
C. America: 52-55-1106-0803

South America: 55-11-2103-6000
Hong Kong: 852-2735-1628
Japan: 81-44-844-8013
UK: 44-8706-080-208

Appendix A - Theory and Application (Continued)

wavelength of 4 inches traveling on a cable that changes from 50 ohms to 25 ohms. The reflection coefficient is -.33, which means that one third of the incident voltage is reflected toward the source. Assume that one inch (one quarter wavelength) down the cable the impedance changes back to 50 ohm. Again, one third of the wave is reflected, but without any phase shift. It travels back to the first interface where one third of this reflected wave is reflected back toward the second interface. Two thirds of the wave is transmitted through the interface and travels back to the source. Since the first (reflected) wave is shifted 180 degrees at the reflection, and the second (transmitted-reflected-transmitted) wave is shifted 180 degrees because it traveled the one inch separation twice, the two waves are in phase. The net result is that the VSWR is much larger because the length of the 25 ohm section was just the right length to cause a resonance. If the length of the 25 ohm section had been one half wavelength, the two waves would have interfered and the VSWR would be at a minimum.

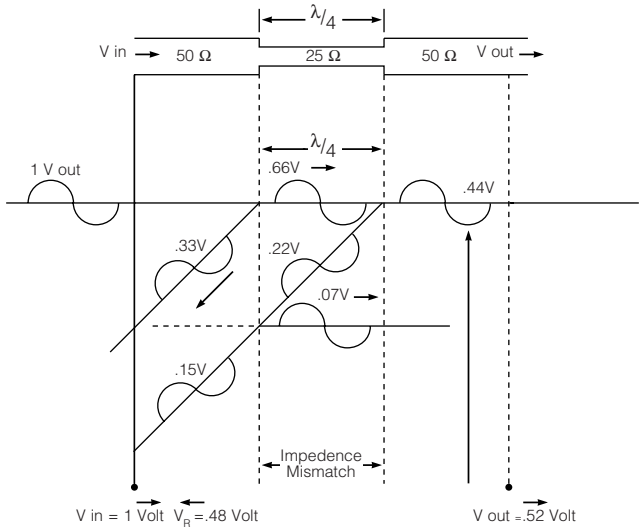

Figure 17

Multiple Wave Reflections
(Caused by Impedance Mismatch)

In summary, avoid cable lengths, printed circuit board paths, or connectors that are multiple of one quarter ($\lambda/4$, $3\lambda/4$, etc.) of the intended signal transmission wavelength. Coaxial cables, when manufactured, also have periodic variations in diameter that result in periodic changes in impedance (Zo), that can cause significant levels of reflected signal (high return loss) at specific frequencies.

Reflections of Digital Signals

The previous discussions dealing with attenuation, reflections and standing waves can apply to digital signals with some extra thought.

A single pulse can be thought of as a combination of high frequency sine waves. The maximum frequency component in a square wave pulse can be calculated by this equation:

f = 0.35/rise time
where
f = GHz when "t" is in nanoseconds

Attenuation of the frequencies necessary to support the short risetime will produce a slower rise and possibly prohibit the pulse from ever reaching the detector. This 'slurring' of the pulse is similar to the behavior of an RC circuit and the attenuation is sometimes called capacitive attenuation.

A series of pulses can demonstrate resonance. If a portion of a pulse is reflected at each interface, it is possible for them to come together and add up to form a new phantom pulse.

The critical frequency here is the bit rate. Think of a sine wave with a frequency the same as the bit rate; if it will resonate in the cable, the pulses will also. Extra pulses caused by resonance might easily result in an error signal from the receiving system requesting a retransmittal. The final result would be a communication system that is much slower than intended.

Cut-off Frequency

The cut-off frequency of a coaxial transmission line is the frequency at which modes of energy transmission, other than the "TEM" mode, can be generated.

$$fco = \frac{7.5}{\sqrt{\varepsilon}\,(D+d)} \text{ (in GHz)}$$

(D and d are measured in inches)

Types of Transmission Lines

Twin Lead transmission cable is generally used where impedance matching alone is important, since it provides only minimal shielding. Impedance values of 300 ohms and 600 ohms are common. Lower impedance values require closer spacing of the conductors and are not normally available in this type of cable. A typical application for twin lead cable is in antenna lead wire for television sets.

Twisted Pair is a variation of the twin lead type. It consists of two lengths of ordinary hookup wire twisted together. A twisted pair provides relatively constant impedance plus better magnetic shielding than twin lead cables. It is flexible, inexpensive, easy to terminate and is used extensively by the computer industry. However, it should not be used when maximum shielding is required.

Catalog 1307191
Revised 3-07

www.tycoelectronics.com

Dimensions are in millimeters and inches unless otherwise specified. Values in brackets are standard equivalents.

Dimensions are shown for reference purposes only. Specifications subject to change.

USA: 1-800-522-6752
Canada: 1-905-470-4425
Mexico: 01-800-733-8926
C. America: 52-55-1106-0803

South America: 55-11-2103-6000
Hong Kong: 852-2735-1628
Japan: 81-44-844-8013
UK: 44-8706-080-208

Appendix A - Theory and Application (Continued)

Shielded Twisted Pair Cable is used to eliminate inductive and capacitive coupling. Twisting cancels out inductive coupling, while the shield eliminates capacitive coupling. Most applications for this cable are between equipment, racks and buildings.

Flexible (Braided) Coaxial Cable is by far the most common type of closed transmission line because of its flexibility. It is a coaxial cable, meaning that both the signal and the ground conductors are on the same center axis. The outer conductor is made from fine braided wire, hence the name “braided coaxial cable”. This type of cable is used in practically all applications requiring complete shielding of the center conductor. The effectiveness of the shielding depends upon the weave of the braid and the number of braid layers. Tyco Electronics manufacturers connectors for cable sizes ranging from less than 1/8 in. diameter, for low power applications of around 50 watts, to over 1/2 in. diameter for power of 850 watts at 100 MHz and voltages up to 5000. In addition to power handling capabilities, cables are available for high frequency applications, high and low temperature applications, severe environmental applications and many other specialized uses.

Triaxial Cable is used when higher “shielding” efficiency characteristics are required in applications similar to those using shielded twisted pair cable.

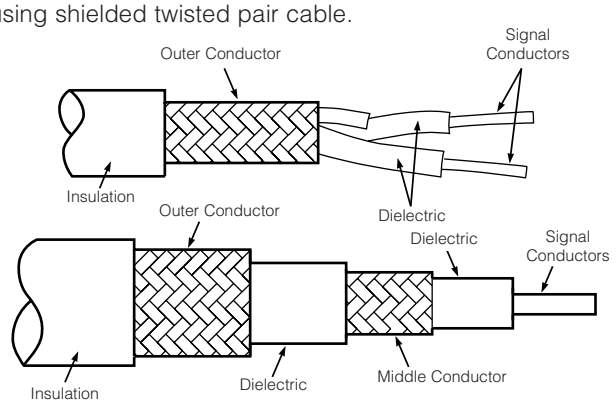

Figure 18

Twin Conductor and Triaxial Cable

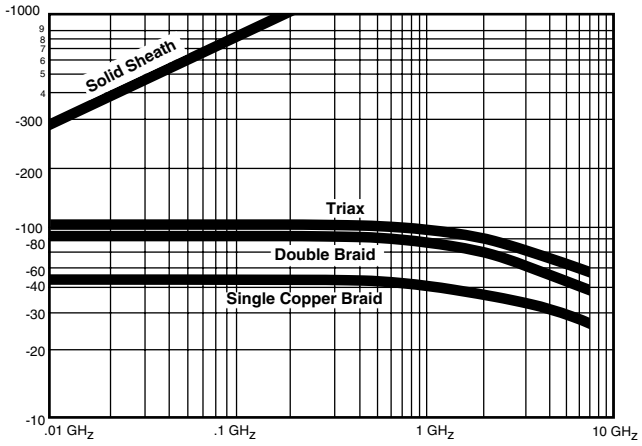

Figure 19

Shielding Efficiencies

Often you will hear the term “shielded cable”. This is very similar to coaxial cable except the spacing between center conductor and shield is not carefully controlled during manufacture, resulting in non-constant impedance.

Semirigid Coaxial Cable uses a solid tubular outer conductor rather than the braided type, so that all the RF energy is contained within the cable. One of the drawbacks of braided cable is that the shielding is not 100% effective, especially at higher frequencies. This is because the braided construction can permit small amounts of short wavelength (high frequency) energy to radiate. Normally this does not present a problem; however, if a higher degree of shielding is required, semirigid coaxial cable is recommended. For applications using frequencies higher than 30 GHz a miniature semirigid cable is recommended. Various connectors are available from Tyco Electronics to terminate these cables.

Ribbon Coaxial Cable is a relatively recent Tyco Electronics innovation which combines the advantages of both ribbon cable and coaxial cable. Tyco Electronics currently provides both the cable and the insulation displacing coaxial connector to terminate the cable. Each individual coaxial cable consists of the signal conductor, dielectric, a foil shield and a drain wire which is in continuous contact with the foil. The entire assembly is then covered with an outer insulating jacket. The unique manufacturing feature of this cable is the precise placement of the drain wires to permit gang stripping of the outer jacket and foil. The major advantage of this cable is the speed and ease with which it can be mass terminated with the Tyco Electronics insulation displacement technique. They can also be separated into individual coaxial lines and terminated with standard coaxial connectors as required.

Catalog 1307191
Revised 3-07

www.tycoelectronics.com

Dimensions are in millimeters and inches unless otherwise specified. Values in brackets are standard equivalents.

Dimensions are shown for reference purposes only. Specifications subject to change.

USA: 1-800-522-6752
Canada: 1-905-470-4425
Mexico: 01-800-733-8926
C. America: 52-55-1106-0803

South America: 55-11-2103-6000
Hong Kong: 852-2735-1628
Japan: 81-44-844-8013
UK: 44-8706-080-208

Appendix B - White Bronze

High Quality Surface Plating & Excellent Intermodulation Performance for RF Connectors

Product Facts

- **Low intermodulation**
- **High corrosion resistance**
- **Low porosity**
- **Low RF losses**
- **Wear and scratch resistance**



Tyco Electronics' industrial electroplating facilities is one of the most advanced in the world.

The Tyco Electronics White Bronze surface finish represents a dramatic improvement upon the wear characteristics and life expectancy of silver plating, at the same time offering a far better electrical performance than nickel. White Bronze plated connectors exhibit intermodulation characteristics significantly better than stainless steel or nickel plated products. Silver has always been the preferred finish from an electrical standpoint but its corrosion and wear characteristics especially in harsh conditions are often unacceptable. While nickel is an extremely rugged finish it has properties undesirable in many RF applications; including, high RF and insertion losses, poor intermodulation performance, high permeability and poor screening effectiveness.

The Tyco Electronics White Bronze is composed of copper, tin and zinc which are applied simultaneously to produce a finished color similar to stainless steel. With one of the most advanced industrial electroplating facilities in the world Tyco Electronics can achieve the levels of control over the complex galvanic process necessary in the application of this alloy.

The Tyco Electronics White Bronze is similar in composition and performance to other copper/tin/zinc alloys developed in the industry such as Sucoplate® and BBR.

Comprehensive conditioning tests have been performed to provide a thorough evaluation of The Tyco Electronics White Bronze plated connector bodies. The tests were performed to the specifications of the European and International RF connector standards — CECC 22000/IEC 68-2-14/ IEC 169-1. The results are summarized on page 280.

Deposit Characteristics

Composition — Copper (55-60%), Tin (20-25%), Zinc (15-20%)

Density — 7.9-8.1 g/cm^3

Hardness — 300-380 HV

Passivation — Immersion Chrome

Sucoplate® is a plating trademark for Huber & Suhner.
BBR is a plating trademark for Radiall.

Need more information?

Call Technical Support Center at 1-800-522-6752 for product and tooling information.

The Technical Support Center is staffed with specialists well versed in all Tyco Electronics products. The Center can provide you with:

- Engineering Support
- Catalogs
- Technical Documents
- Product Samples
- Tyco Electronics Authorized Distributor Locations
- Tyco Electronics Internet Home Page: **www.tycoelectronics.com**

Catalog 1307191
Revised 3-07

www.tycoelectronics.com

Dimensions are in millimeters and inches unless otherwise specified. Values in brackets are standard equivalents.

Dimensions are shown for reference purposes only. Specifications subject to change.

USA: 1-800-522-6752
Canada: 1-905-470-4425
Mexico: 01-800-733-8926
C. America: 52-55-1106-0803

South America: 55-11-2103-6000
Hong Kong: 852-2735-1628
Japan: 81-44-844-8013
UK: 44-8706-080-208

Appendix B - White Bronze (Continued)

Low Intermodulation Products

Dissimilar metals, finishes and discontinuities within a coaxial line structure give rise to Intermodulation Products (IMP). This is of particular concern in applications requiring low levels of intermodulation, such as cellular base stations and antennas. White Bronze plated connectors offer better IMP performance and lifetime characteristics than nickel. Due to the similarity of electrolytic potentials and the non magnetic properties of the finish, levels of intermodulation are commensurate with silver and far in excess of stainless steel/nickel connectors. At the same time the excellent wear characteristics and durability of the finish ensure that the intermodulation life of the connector is greater than silver. The life is also improved as a direct result of the excellent corrosion resistance properties of White Bronze; thereby minimizing metal/metal oxide junctions.

Highly Corrosion Resistant

Even under continuous exposure to harsh environments White Bronze retains its aesthetic appearance. Unlike silver it does not discolor when exposed to sulphur, potassium sulphides etc., neither is there any build up in oxide layers as is the case with nickel. Furthermore, White Bronze parts have successfully passed all international salt spray tests (MIL, BS, CECC, IEC).

In conditions of continuously high temperatures (>100°C) and/or excessive humidity (>100%) there is no build up of foreign layers which may affect contact resistance.

Low Porosity and No Reaction with Contact Surfaces

Less than 2µm of White Bronze is needed to create a completely nonporous, corrosion resistant surface. Tyco Electronics applies White Bronze to a thickness of between 2µm and 3µm. This compares favorably with the typical plating thickness of nickel (>10µm) and consequently, variations in plating depth are significantly less.

White Bronze does not alloy with brass and since its coefficient of expansion is virtually identical to that of brass, rapid temperature shocks (-50°C/200°C) do not cause blistering or cracking of the plating.

The electrolytic potential of White Bronze is approximately that of brass. Consequently, any White Bronze plated connectors in contact with stainless steel, silver, nickel or nickel containing finishes carry no risk of corrosion as a result of any chemical potential difference.

Low RF Losses

The relative permeability (µr) of the Tyco Electronics White Bronze is 1 giving rise to low RF losses even at high frequencies. As a direct result of the good conductivity of the finish, skin depth is minimized further reducing insertion loss and ensuring a better impedance match across the frequency range of the connectors.

Non Magnetic Finish

The Tyco Electronics White Bronze contains no ferrous materials and so has no magnetic properties. This is particularly desirable in many RF applications.

Wear and Scratch Resistant

The hardness of the Tyco Electronics White Bronze at 300-380HV is more than double that of silver and marginally harder than platings containing nickel. This gives a scratch resistance which is rarely surpassed and makes it ideal for high mating applications.

Catalog 1307191
Revised 3-07

www.tycoelectronics.com

Dimensions are in millimeters and inches unless otherwise specified. Values in brackets are standard equivalents.

Dimensions are shown for reference purposes only. Specifications subject to change.

USA: 1-800-522-6752
Canada: 1-905-470-4425
Mexico: 01-800-733-8926
C. America: 52-55-1106-0803

South America: 55-11-2103-6000
Hong Kong: 852-2735-1628
Japan: 81-44-844-8013
UK: 44-8706-080-208

Appendix B - White Bronze (Continued)



White Bronze is available on all products, including 7-16, N, TNC, OSP and SMA.

Low Coefficient of Friction

The coefficient of friction is approximately 70% that of silver to give lower insertion forces and smoother coupling. These properties combine to produce a harder wearing, longer lasting finish which prolongs connector life and reduces the ongoing cost of ownership.

Tyco Electronics' White Bronze

Environmental Test

Four groups of conditioning tests were performed to provide a comprehensive evaluation of the Tyco Electronics White Bronze plated connector bodies. The tests were performed to the specifications of the European and International RF connector standards - CECC 22000/ IEC 68-2-14/IEC 169-1. Full details and relevant data are available from Tyco Electronics and results are summarized below.

Test 1 - Industrial Atmosphere & Temperature

Endurance

1.1 Industrial Atmosphere Exposure to Sulphur Dioxide Atmosphere (as specified in IEC 68-2-42 Test Kc) for 21 days of mated connectors, previously subjected to 500 matings, to determine the influence of sulphur dioxide on the corrosion resistance properties of White Bronze Plating. Contact resistance measured after matings and sulphur dioxide exposure was less than 5% (0.23mohm) of the permissible specification.

1.2 High Temperature Endurance Exposure to temperatures of 85°C ±5°C for 250 hours, to determine the impact of prolonged high temperatures on plating adhesion. Prior to testing the connectors were subject to 500 matings. Results showed no visual deterioration in plating finish (blistering, cracking etc.) and the results of outer conductivity performance were comparable to Test 1 (above).

Test 2 - Rapid Temperature Change & Damp Heat

Steady State

2.1 Rapid Temperature Change Exposure to -55°C and +85°C for 15 minutes, transition time 2-3 minutes, 50 cycles. To determine possible plating deterioration caused by prolonged and rapid temperature change. No visual deterioration, outer conductivity performance were comparable with Test 1 (above).

2.2 Damp Heat Steady State Exposure to 93% relative humidity (at 40°C) for 10 days. To determine plating adhesion. No visual deterioration, outer conductivity performance were comparable with Test 1 (above).

Test 3 - Soldering Heat

3.1 Resistance to Soldering Heat Exposure to concentrated soldering heat (250°C) for 10 seconds to evaluate any possible deterioration in plating finish. No deterioration detected.

Test 4 - Salt Mist & Mechanical Endurance

4.1 Salt Mist
Exposure to salt mist spray (as defined in BS 2011 Pt. 2.1 Ka) for 48 hours to evaluate the uniformity of protective coatings, any visual deterioration, or impact on electrical performance. No visual deterioration, outer conductivity performance were comparable with Test 1 (above).

4.2 Mechanical Endurance Electrical and visual evaluation of the connectors after 500 matings to determine any electrical or visual deterioration. No visual deterioration, outer conductivity performance were comparable with Test 1 (above).

Availability and Ordering

Tyco Electronics offers White Bronze on all products including 7-16, N, TNC, SMA and OSP.
For more information on White Bronze contact your local Tyco Electronics Sales Office.

Catalog 1307191
Revised 3-07

www.tycoelectronics.com

Dimensions are in millimeters and inches unless otherwise specified. Values in brackets are standard equivalents.

Dimensions are shown for reference purposes only. Specifications subject to change.

USA: 1-800-522-6752
Canada: 1-905-470-4425
Mexico: 01-800-733-8926
C. America: 52-55-1106-0803

South America: 55-11-2103-6000
Hong Kong: 852-2735-1628
Japan: 81-44-844-8013
UK: 44-8706-080-208

Appendix C - Intermodulation in RF Coaxial Connectors

Product Facts

- **High quality plating to 6µm for IM-sensitive products**
- **Restrict materials to copper and its alloys**
- **Avoid the use of stainless steel, nickel, ferrites, etc. in the signal path**
- **Quality machining**
- **Ensure, by design, a properly defined contact interface at connector, panel and contact interfaces**
- **Avoidance of crimps**

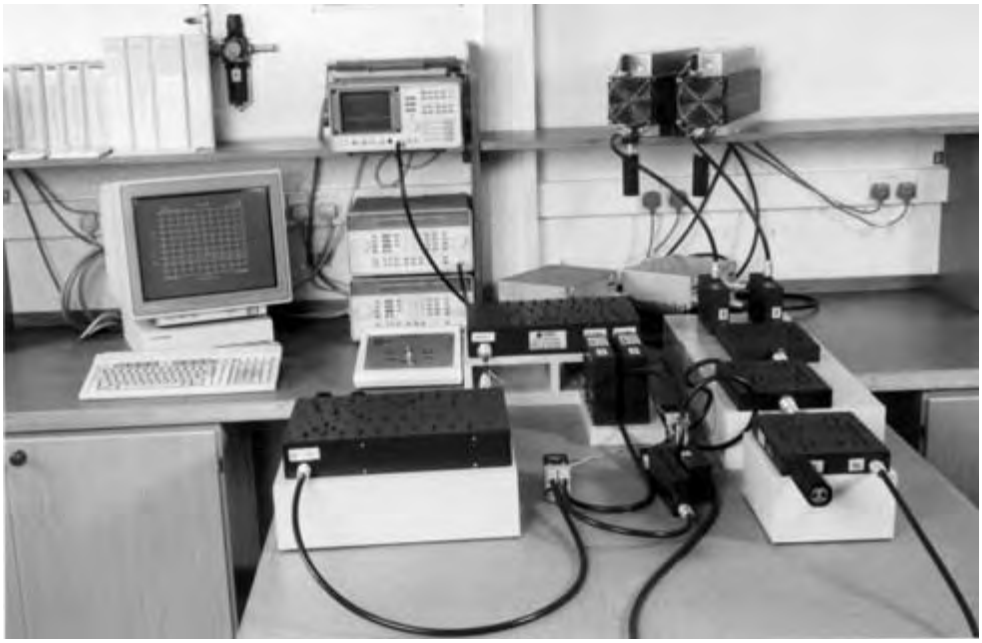

The increased demand from the mobile communication industry to provide greater channel capacity coupled with the increased sensitivity of receivers has exposed a condition within RF Coaxial Connectors referred to as Intermodulation Distortion (IMD). This condition occurs when non-linearities within the connectors act as imperfect diodes to generate other frequencies known as Intermodulation Products (IMP). Some of these frequencies appear within the receive band and effectively block the channel. The purpose of this application note is to outline the basic causes of Intermodulation and the techniques Tyco Electronics has undertaken to minimize this condition.

IM Basics

Modern developments in base stations for GSM, DCS 1800 and PCS 1900 have necessitated the use of “7-16”, “4.1/9.5” and “N” connectors due to the increased power requirements. The requirements for performance are typically in the order of -160 dBc to -163dBc (when working in dBc) or -120dBm (when working in dBm), both with 2 x (+43dBm) tones. The requirement is so stringent because the connectors are used in post-filtering sections of the transmit path (between the diplexer and the antenna) and also because the system is a full duplex system where the multiple-carrier transmit path is also the receive path. In a truly linear system, the output is directly proportional to the input, following the form of y=mx+c (see fig. 2). Coaxial connectors have traditionally been viewed as following this pattern. In reality, there have always been non-linearities present in coaxial connectors. These were not readily apparent as the resultant IM products were significantly below the noise floor of the system due to relatively weak carrier signals. This situation becomes apparent when the incident power is raised above 30 dBm.

The small non-linearities have a characteristic similar to a square-law (see Fig 3). The distortion to the waveform is evident, the

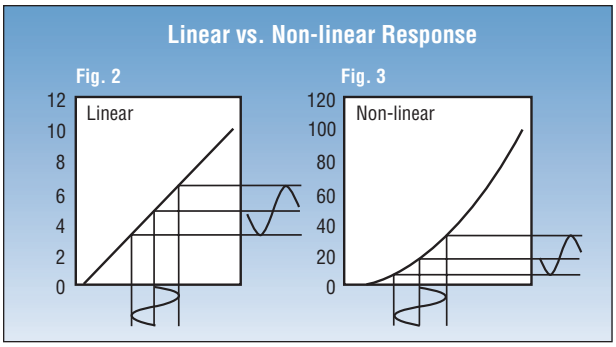

Need more information?

Call Technical Support at the numbers listed below.

Technical Support is staffed with specialists well versed in all Tyco Electronics products. They can provide you with:

- Technical Support
- Catalogs
- Technical Documents
- Product Samples
- Tyco Electronics Authorized Distributor Locations

Catalog 1307191
Revised 3-07

www.tycoelectronics.com

Dimensions are in millimeters and inches unless otherwise specified. Values in brackets are standard equivalents.

Dimensions are shown for reference purposes only. Specifications subject to change.

USA: 1-800-522-6752
Canada: 1-905-470-4425
Mexico: 01-800-733-8926
C. America: 52-55-1106-0803

South America: 55-11-2103-6000
Hong Kong: 852-2735-1628
Japan: 81-44-844-8013
UK: 44-8706-080-208

Appendix C - Intermodulation in RF Coaxial Connectors (Continued)

IM Basics (Continued)

positive 1/2 cycle being significantly greater in amplitude than the negative 1/2-cycle. When converted to the frequency domain, this waveform consists of the desired fundamental plus a decaying series of related harmonics that, in themselves, interact with other carriers present on the transmission line.

The effect of this interaction produces additional frequencies, some of which occur where they are least wanted (see fig. 4). The 2F1-F2 (3rd order IMP), 3F1-2F2 (5th order IMP) and 4F1-3F2 (7th order IMP) products can all manifest in the receive band and, if sufficiently large, effectively block a channel by making the base station receiver think that a carrier is present when one is not.

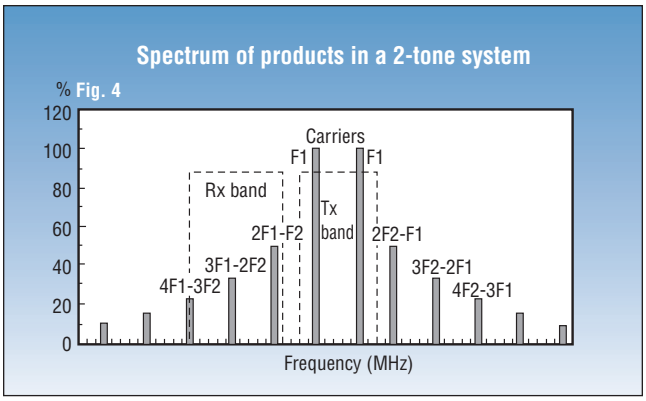

Potential causes of IM in Coaxial Connectors

There are numerous factors which can affect intermodulation performance in RF coaxial connectors. Identified below are the most likely sources of concern:

- Contaminated plating solution
- Insufficient plating thickness
- Corrosion
- Dissimilar metals in intimate contact
- Magnetic materials in the signal path
- Low contact pressure
- Less than 360-degree contact
- Poor surface finish
- Debris and dust within the connector
- Convoluted signal path

Remedies for IM in RF Coaxial Connectors

To combat the above identified IM sources, Tyco Electronics undertakes precautions during the design and manufacture of the product, as summarized below:

- High quality plating to 6µm for IM-sensitive products

The plating must also be free from contaminants and properly passivated with a chromate passivate. Silver has been the preferred plating material as it possesses the lowest practical resistivity thereby minimizing interface contact resistances. Tyco Electronics also offers a unique White Bronze plating finish which provides excellent durability, tarnish resistance and non-magnetic properties ideal for low intermodulation. During testing with a system noise floor of -145 dBm, the difference in performance between the Tyco Electronics silver-plating and the Tyco Electronics White Bronze finish is not discernible (refer to White Bronze Application Note 1307057).

- Restrict materials to copper and its alloys.

This ensures maximum plating adhesion and minimum electrochemical potential difference between the base materials and their over-platings.

- Avoid the use of stainless steel, nickel, ferrites, etc. in the signal path

Magnetic and para-magnetic materials will only compound non-linearites and give poorer interface contact resistances. During experimentation, Tyco Electronics discovered a degradation in performance of 20dB when nickel plate was used. The presence of magnetic or para-magnetic materials will also cause the forward IMP figure to differ from the reverse IMP.

- Quality machining

Surface finish is paramount. The signal propagates within a "skin" if this skin is too rough, the signal will repeatedly transition through metal and surface oxide layers, thereby creating the same effect as a poor panel contact (see fig. 5). For IM-sensitive designs Tyco Electronics ensures 0.4µm is the maximum.

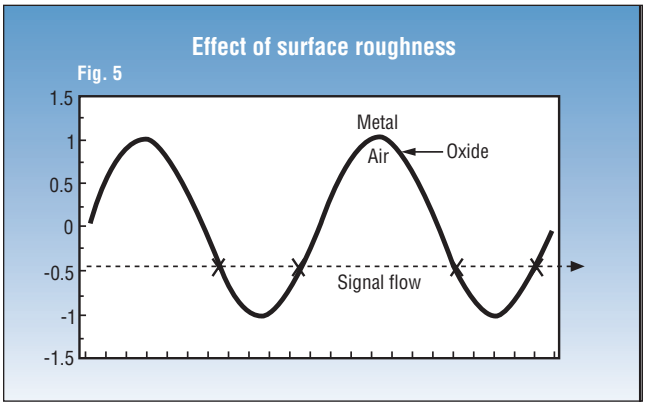

- Contact design

This primarily affects the connector interface. Repeated matings can generate small amounts of plating from the individual parts. These oxidize and interfere with the mechanical (and therefore electrical) mating of connectors. The oxidized debris gives further rise to metal and surface oxide junctions and consequently, higher IM products.

- Ensure, by design, a properly defined contact interface at connector, panel and contact interfaces

Insufficient contact force will give rise to metal to oxide junctions. The classic rectifiers were metal oxide by composition.

Axial maximum material condition at the connector interface is critical in order to ensure minimum mismatch and maximum

Catalog 1307191
Revised 3-07

www.tycoelectronics.com

Dimensions are in millimeters and inches unless otherwise specified. Values in brackets are standard equivalents.

Dimensions are shown for reference purposes only. Specifications subject to change.

USA: 1-800-522-6752
Canada: 1-905-470-4425
Mexico: 01-800-733-8926
C. America: 52-55-1106-0803

South America: 55-11-2103-6000
Hong Kong: 852-2735-1628
Japan: 81-44-844-8013
UK: 44-8706-080-208

Appendix C - Intermodulation in RF Coaxial Connectors (Continued)

Remedies for IM in RF Coaxial Connectors (Continued)

potential of a butt-contact. Panel interfaces generally concern the physical contact of the connector body to the panel. In this case, it has been determined that a protruding feature as close as possible to the body bore will give the best IM performance. The applied mounting force is concentrated in the surface area of the protrusion which, on engagement with the panel, punctures the existing oxide layer to give a metal-to-metal, gas-tight junction.

- Avoidance of crimps

Crimps, by nature, can only give multiple point-contact rather than 360-degree contact and also cause a variability in the position of electrical contact during dynamic testing. IM products will therefore be greater. It has been found that soldered center contacts and clamp/solder outer contacts give the best static and dynamic IM performance.

Improving IM Connector Design

Tyco Electronics continues to pursue design techniques which improve intermodulation performance to address emerging telecommunication market needs. A state of the art intermodulation test facility and participation on the international (IEC SC46D WG5) committee to develop standard test practices ensures our commitment to the understanding of intermodulation characteristics. This applied technology base is instrumental in developing innovative low intermodulation products for 7-16, Type N, SMA and OSP interfaces.

Most commonly asked questions regarding Intermodulation

1. Why is intermodulation such a concern for cellular infrastructure equipment?

The primary concerns for cellular service providers today are channel efficiency and clarity of transmission. Growth in demand for mobile communications has created a need to operate equipment at greater capacities and reliability to service the competitive market. Intermodulation degrades or limits the ability of the service provider to operate at optimal levels of performance and may ultimately cause subscribers to experience poor call quality. Intermodulation has become an important factor in system selection to ensure the best possible network service.

2. Where is intermodulation most likely to occur in cellular infrastructure equipment?

Intermodulation is typically of greatest concern between the filtering elements of the system and the antenna. The introduction of higher power levels for the transmit side of the equipment creates greater potential for intermodulation to occur. This is why the majority of focus for intermodulation concerns 7-16, Type N, SMA and 4.1/9.5 connector interfaces.

3. Is intermodulation a recent development?

Intermodulation has always been inherently present in RF coaxial connectors but may be relatively imperceptible in some devices for a variety of reasons. The amount of power applied to an RF connector determines the relative IM threshold which can be observed. Intermodulation is therefore more likely to cause concern in a higher power system, for example, utilizing a 7-16 connector interface rather than an equivalent low power OSX solution. The trend toward higher power digital cellular systems creates the need for greater intermodulation sensitivity.

4. What is the best method of cable attachment for IM sensitive cable assembly applications?

Soldering and clamping are preferred methods due to the 360-degree point of contact created at the cable to connector interface. Such intimate contact improves the overall contact resistance leading to improved IM characteristics. In addition, it is also better to solder the center conductor of the connector to the cable versus crimping due to the improved contact resistance path and elimination of voids.

5. Are there ways to test for intermodulation in an RF coaxial connector?

Yes, very sophisticated methods are needed to test for intermodulation in RF connectors. The test system must utilize extremely sensitive filtering or clean amplification so that the equipment itself has a very low intermodulation noise floor. There is not yet a standardized approach to testing, although an international committee has been formed in the connector industry to address the situation. Tyco Electronics has a state of the art test facility where our designs are optimized for low intermod performance and where further analysis on the effects of this phenomena can be studied.

6. Is intermodulation in coaxial connectors frequency dependent?

No. Because coaxial connectors are broadband devices there is no frequency dependency. Some apparent variability can be detected during testing but this is not due to the connector. The impedance matches of the output diplexer/triplexer and terminations are the causes of the variations and should not be incorrectly attributed to the connector/assembly.
Tyco Electronics Interconnect Business Unit has demonstrated that by varying the impedance match of the test station termination, a DUT can show 15dB better IMP_3 than exists in reality.

7. IMP_3 in mixers follows a 3dB/dB relationship. What is it for connectors?

The relationship is identical. Taking the 3rd order (2F1-F2): varying the power of F2 gives an IMP_3 relationship of 1dB/dB whereas varying the power of F1 gives a relationship of 2dB/dB as the IMP is derived from the 2nd harmonic of F1. This gives a total of 3dB/dB when symmetrically varying both carrier powers.

8. I am buying a complete cable assembly from Tyco Electronics. How do I interpret the IMP result now?

With caution! It is the Tyco Electronics policy when testing devices to move away from the normal static test to a dynamic test where the cable termination interfaces are mechanically exercised during live IM conditions. It is also a good indicator to customers of the build quality of the assemblies. A dynamic evaluation has shown 15dB degradation in IMP performance for poor assemblies and even as much as 50dB for bad ones.It is therefore strongly advisable that IM performance figures are stated in the context of a dynamic measurement.

Catalog 1307191
Revised 3-07

www.tycoelectronics.com

Dimensions are in millimeters and inches unless otherwise specified. Values in brackets are standard equivalents.

Dimensions are shown for reference purposes only. Specifications subject to change.

USA: 1-800-522-6752
Canada: 1-905-470-4425
Mexico: 01-800-733-8926
C. America: 52-55-1106-0803

South America: 55-11-2103-6000
Hong Kong: 852-2735-1628
Japan: 81-44-844-8013
UK: 44-8706-080-208

Appendix D - Typical Coaxial Cable Specifications

Abbreviations

Dielectric

PE .....Solid polyethylene
PTEE .....Solid polyetrafluoroethylene
PIB.....Polyisobulylene, Type B, per MIL-C-17
Rubber .....Per MIL-C-17D
Sil .....Silicone rubber
PS.....Polystyrene

Conductors and Braid Materials

AL .....Aluminum
SCAAI .....Silver covered copper covered aluminum
BC.....Bare copper
SC.....Silver covered copper
CCS .....Copper covered steel
TC.....Tinned copper
SCCS.....Silver covered copper covered steel
SCCad Br.....Silver covered cadmium bronze
GS.....Galvanized steel
TCCS .....Tin copper covered steel
SSC .....Silver covered strip
HR.....High resistance wire
SA .....Silver covered alloy

Jacket Material

PVC-I.....Black polyvinylchloride, contaminating, Type I, per MIL-C-17D
PVC-II.....Gray polyvinylchloride, noncontaminating, Type II, per MIL-C-17D
PVC-IIA.....Black polyvinylchloride, noncontaminating, Type IIA, per MIL-C-17D
PE-III.....Clear polyethylene
PE-IIIA .....High molecular weight, black polyethylene, Type IIIA, per MIL-C-17D
FG Braid V ....Fiberglass, impregnated, Type V, per MIL-C-17D
FEP-IX .....Fluorinated ethylene propylene, Type IX, per MIL-C-17D
PUR .....Polyurathane, black specific compounds
SIL/DAC-VI...Dacron braid over silicone rubber, Type VI, per MIL-C-17D
Rubber .....Per MIL-C-17D

RG/U Type Cable	Inner Conductor	Dielectric Material	DOD	Number/Type of Shielding Braids	Jacket Material	O.D.	Weight (lb/ft)	Nom. Imped. (Ohms)	Nom. Cap pf/ft	Max. Operating Temp. (C°)	Max. Operating Voltage (Volts RMS)	Comments
4	**0.81** BC .0320	PE	**.295** .116	2/BC	PVC-1	**5.74** .226	.025	50	30.8	−40 +80	1900	Use RG 58C
5	**1.29** BC .0508	PE	**4.7** .185	2/BC	PVC-1	**8.43** .332	.088	52.5	28.5	−40 +80	3000	Use up to 100 MHz
5A	**1.29** SC .0508	PE	**4.6** .181	2/SC	PVC-II	**8.33** .328	.088	50	30.8	−40 +80	3000	Use RG 212
5B	**1.29** SC .0508	PE	**4.6** .181	2/SC	PVC-IIA	**8.33** .328	.087	50	30.8	−40 +80	3000	Use RG 212
6	**0.72** CCS .0285	PE	**4.7** .185	2/Inner SC Outer BC	PVC-II	**8.43** .332	.081	76	20.0	−40 +80	2700	Use RG 6A
6A	**0.72** CCS .0285	PE	**4.7** .185	2/Inner SC Outer BC	PVC-IIA	**8.43** .332	.082	75	20.6	−40 +80	2700	Good Attenuation Stability
7	**0.91** BC .0359	Air-Space PE	**6.35** .250	1/BC	PVC-I	**9.4** .370	.080	95	12.5	−40 +80	1000	Use RG 63B
8	**2.17** .0855 7/**0.72** BC .0285	PE	**7.24** .285	1/BC	PVC-I	**10.29** .405	.106	52	29.5	−40 +80	4000	Use RG 213
8A	**2.17** .0855 7/**0.72** BC .0285	PE	**7.24** .285	1/BC	PVC-IIA	**10.29** .405	.106	52	29.5	−40 +80	5000	Use RG 213
9	**2.17** .0855 7/**0.72** SC .0285	PE	**7.11** .280	2/Inner SC Outer BC	PVC-II	**10.67** .420	.140	51	30.0	−40 +80	4000	Use RG 214
9A	**2.17** .0855 7/**0.72** SC .0285	PE	**7.11** .280	2/SC	PVC-II	**10.67** .420	.140	51	30.0	−40 +80	4000	Use RG 214
9B	**2.17** .0855 7/**0.72** SC .0285	PE	**7.11** .280	2/SC	PVC-IIA	**10.67** .420	.150	50	30.8	−40 +80	5000	Uase RG 214
10	**2.17** .0855 7/**0.72** BC .0285	PE	**7.24** .285	1/BC	PVC-II w/Armor	**11.76** .463	.146	52	29.5	−40 +80	4000	Use RG 215
10A	**2.17** .0855 7/**0.72** BC .0285	PE	**7.24** .285	1/BC	PBC-IIA w/Armor	**11.76** .463	.146	52	29.5	−40 +80	5000	Use RG 215
11	**1.21** .0477 7/**0.4** TC .0159	PE	**7.24** .285	1/BC	PVC-I	**10.29** .405	.096	75	20.6	−40 +80	4000	Use up to 100 MHz
11A	**1.21** .0477 7/**0.4** TC .0159	PE	**7.24** .285	1/BC	PVC-IIA	**10.29** .405	.096	75	20.6	−40 +80	5000	Use up to 1000 Mhz
12	**1.21** .0477 7/**0.4** TC .0159	PE	**7.24** .285	1/BC	PVC-II w/Armor	**11.76** .463	.141	75	20.6	−40 +80	4000	Use RG 12A

Catalog 1307191
Revised 3-07

www.tycoelectronics.com

Dimensions are in millimeters and inches unless otherwise specified. Values in brackets are standard equivalents.

Dimensions are shown for reference purposes only. Specifications subject to change.

USA: 1-800-522-6752
Canada: 1-905-470-4425
Mexico: 01-800-733-8926
C. America: 52-55-1106-0803

South America: 55-11-2103-6000
Hong Kong: 852-2735-1628
Japan: 81-44-844-8013
UK: 44-8706-080-208

Appendix D - Typical Coaxial Cable Specifications (Continued)

RG/U Type Cable	Inner Conductor	Dielectric Material	DOD	Number/Type of Shielding Braids	Jacket Material	O.D.	Weight (lb/ft)	Nom. Imped. (Ohms)	Nom. Cap pf/ft	Max. Operating Temp. (C°)	Max. Operating Voltage (Volts RMS)	Comments
12A	**1.21** .0477 7/**0.4** TC .0159	PE	**7.24** .285	1/BC	PVC-IIA w/Armor	**11.76** .463	.141	75	20.6	−40 +80	5000	Use up to 1000 MHz
13	**1.21** .0477 7/**0.4** TC .0159	PE	**7.11** .280	2/BC	PVC-I	**10.67** .420	.126	74	20.8	−40 +80	4000	Use RG 216
13A	**1.21** .0477 7/**0.4** TC .0159	PE	**7.11** .280	2/BC	PVC-IIA	**10.67** .420	.126	52	20.8	−40 +80	4000	Use RG 216
14	**2.59** BC .1020	PE	**9.4** .370	2/BC	PVC-II	**13.84** .545	.216	52	29.5	−40 +80	5500	Use RG 217
14A	**2.59** BC .1020	PE	**9.4** .370	2/BC	PVC-IIA	**13.84** .545	.216	76	29.5	−40 +80	7000	Use RG 217
15	**1.45** CCS .0571	PE	**9.4** .370	2/BC	PVC-I	**13.84** .545	.197	52	20.0	−40 +80	5000	Use up to 1000 MHz
16	**2.59** BC .1250 Tube	PE	**11.68** .460	1/BC	PVC-I	**16** .630	.254	52	29.5	−40 +80	6000	Use up to 1000 MHz
17	**4.78** BC .1880	PE	**17.27** .680	1/BC	PVC-II	**22.1** .870	.460	52	29.5	−40 +80	11,000	Use up to 1000 MHz
17A	**4.78** BC .1880	PE	**17.27** .680	1/BC	PVC-IIA	**22.1** .870	.460	52	29.5	−40 +80	11,000	Use RG 218
17B	Cancelled, Reassigned New Nomenclature, RG 177											
18	**4.78** BC .1880	PE	**17.27** .680	1/BC	PVC-II w/Armor	**23.50** .925	.585	52	29.5	−40 +80	11,000	Use RG 219
18A	**4.78** BC .1880	PE	**17.27** .680	1/BC	PVC-IIA w/Armor	**23.57** .928	.585	52	29.5	−40 +80	11,000	Use RG 219
19	**6.35** BC .2500	PE	**23.11** .910	1/BC	PVC-II	**28.45** 1.120	.740	52	29.5	−40 +80	14,000	Use RG 220
19A	**6.35** BC .2500	PE	**23.11** .910	1/BC	PVC-IIA	**28.45** 1.120	.740	52	29.5	−40 +80	14,000	Use RG 220
20	**6.35** BC .2500	PE	**23.11** .910	1/BC	PVC-II w/Armor	**29.92** 1.178	.925	52	29.5	−40 +80	14,000	Use RG 221
20A	**6.35** BC .2500	PE	**23.11** .910	1/BC	PVC-IIA w/Armor	**29.92** 1.178	.925	53	29.5	−40 +80	14,000	Use RG 221
21	**1.29** **0508** High Res. Wire	PE	**4.7** .185	2/SC	PVC-II	**8.43** .332	.087	53	29.0	−40 +80	2700	Use RG 222
21A	**1.29** **.0508** High Res. Wire	PE	**4.7** .185	2/SC	PVC-IIA	**8.43** .332	.087	95	29.0	−40 +80	2700	Use RG 222
22	2 Cond. **1.16** .0456 7/**0.39** BC .0152	PE	**7.24** .285	1/TC	PVC-I	**10.29** .405	.105	95	16.0	−40 +80	1000	Balanced Line w/Twisted Cond.
22A	2 Cond. **1.16** .0456 7/**0.39** BC .0152	PE	**7.24** .285	2/TC	PVC-II	**10.67** .420	.151	95	16.0	−40 +80	1000	Balanced Line w/Twisted Cond.
22B	2 Cond. **1.16** .0456 7/**.0.39** BC .0152	PE	**7.24** .285	2/TC	PVC-IIA	**10.67** .420	.151	125	16.0	−40 +80	1000	Balanced Line w/Twisted Cond.
23	2 Cond. **2.17** .0855 7/**0.72** BC .0285	PE,2 Cores	**9.65** .380	2/Inidividual Inner Common Outer BC	PVC-I	**16.51 x .490** .650 **24** .945	.490	125	12.0	−40 +80	3000	Use RG 23A
23A	2 Cond. **2.17** .0855 7/**0.72** BC .0285	PE,2 Cores	**9.65** .380	2/Individual Inner Common Outer BC	PVC-IIA	**16.51 x .490** .650 **24** .945	.490	125	12.0	−40 +80	3000	Dual Coaxial Balanced Line
24	2 Cond. **2.17** .0855 7/**0.72** BC .0285	PE,2 Cores	**9.65** .380	2/Individual Inner Common Outer BC	PVC-I w/Armor	**25.48** 1.003 **19.81** .780	.670	.670	12.0	2/Individual −40 +80	3000	Use RG 24A

Catalog 1307191
Revised 3-07

www.tycoelectronics.com

Dimensions are in millimeters and inches unless otherwise specified. Values in brackets are standard equivalents.

Dimensions are shown for reference purposes only. Specifications subject to change.

USA: 1-800-522-6752
Canada: 1-905-470-4425
Mexico: 01-800-733-8926
C. America: 52-55-1106-0803

South America: 55-11-2103-6000
Hong Kong: 852-2735-1628
Japan: 81-44-844-8013
UK: 44-8706-080-208

Appendix D - Typical Coaxial Cable Specifications (Continued)

RG/U Type Cable	Inner Conductor	Dielectric Material	DOD	Number/Type of Shielding Braids	Jacket Material	O.D.	Weight (lb/ft)	Nom. Imped. (Ohms)	Nom. Cap pf/ft	Max. Operating Temp. (C°)	Max. Operating Voltage (Volts RMS)	Comments
24A	2 Cond. **2.17** .0855 7/**0.72** BC .0285	PE,2 Cores	**9.65** .380	2/Individual Inner Common Outer BC	PVC-IIA w/Armor	**25.48** 1.003 **19.81** .780	.670	125	12.0	−40 +80	3000	Use RG 23A
25A	**1.49** .0585 19/**0.3** TC .0117	Rubber-E	**7.32** .288	2/TC	Rubber-IV	**12.83** .505	.205	48	50.0	−40 +80	10,000	—
26A	**1.49** .0585 19/**0.3** TC .0117	Rubber-E	**7.32** .288	1/TC	Rubber-IV w/Armor	**12.27** .483	.189	48	50.0	−40 +80	10,000	—
27A	**2.35** .0925 19/**0.47** TC .0185	Rubber-D	**11.56** .455	1/TC	Rubber-IV w/Armor	**16.59** .653	.304	48	50.0	−40 +80	15,000	—
28B	**2.35** .0925 19/**0.47** TC .0185	Rubber-D	**11.56** .455	2/TC, GS	Rubber-IV w/Armor	**19.05** .750	.370	48	50.0	−40 +80	15,000	—
29	**0.81** BC .0320 **1.21** .0477	PE	**2.95** .116	1/TC	PE-111	**4.67** .184	0.21	53.5	28.5	−55 +80	1900	Use RG 58
30	7/**0.4** BC .0159	PIB	**4.7** .185	1/BC	PVC-I	**6.35** .250	.044	50	27.0	−40 +80	1500	Use RG 58
31	**2.17** .0855 7/**0.72** BC .0285	PIB	**7.24** .285	1/BC	PVC-I	**10.29** .405	.106	51	31.0	−40 +80	2000	Use RG 213
32	**2.17** .0855 7/**0.72** BC .0285	PIB	**7.24** .285	1/BC	PVC-I w/Armor	**11.81** .465	.141	51	29.0	−40 +80	2000	Use RG 215
33	**2.59** BC .1019	PE	**9.4** 3.70	None	Lead	**11.94** .470	.390	51	30.0	−55 +80	6000	—
34	**2.17** .0855 7/**0.72** BC .0285	PE	**11.56** .455	1/BC	PVC-I	**15.88** .625	.224	71	21.5	−40 +80	5200	Use RG 31B
34A	**1.9** .0747 7/**0.63** BC .0249	PE	**11.68** .460	1/BC	PVC-IIA	**16** .630	.224	75	20.6	−40 +80	6500	Use RG 34B
34B	**1.9** .0747 7/**0.63** BC .0249	PE	**11.68** .460	1/BC	PVC-IIA	**16** .630	.224	75	20.6	−40 +80	6500	Use up to 1000 MHz
35	**2.91** BC .1144 **1.6** 0.63	PE	**11.68** .460	1/BC	PVC-II w/Armor	**23.57** .928	.525	71	21.5	−40 +80	10,000	Use RG 35B
35A	**2.65** BC .1045	PE	**11.68** .460	1/BC	PVC-IIA w/Armor	**23.57** .928	.525	75	20.6	−40 +80	10,000	Use RG 35B
35B	**2.65** BC .1045	PE	**11.68** .460	1/BC	PVC-IIA	**23.57** .928	.525	75	20.6	−40 +80	10,000	Unarmored: see RG 164
36	**4.11** BC .1620	PE	**23.11** .910	1/BC	PVC-I	**29.97** 1.180	.805	69	22.0	−40 +80	13,000	Use up to 1000 MHz
37	**0.81** TC .0320	Rubber-C	**3.56** .140	1/TC	PE-III	**5.33** .210	.040	52.5	38.0	−55 +80	750	—
38	**1.15** TC .0453	Rubber-C	**4.98** .196	2/TC	PE-III	**7.92** .312	.110	52.5	38.0	−55 +80	1000	—
39	**0.64** CCS .0253	Rubber-C	**4.98** .196	2/TC	PE-III	**7.92** .312	.100	72.5	28.6	−55 +80	1000	—
40	**0.64** CCS .0253	Rubber-C	**4.98** .196	2/TC	Rubber IV	**10.67** .420	.150	72.5	28.0	−40 +80	1000	—
41	**1.24** .0490 16/**0.25** TC .0100	Rubber-IV	**6.35** .250	1/TC	Rubber-IV	**10.8** .425	.150	67.5	27.6	−40 +80	3000	—
42	**0.72** .0285 Res. Wire	PE	**4.98** .196	2/SC	PVC-II	**8.69** .342	.050	78	20.0	−40 +80	2700	Use RG 222

Catalog 1307191
Revised 3-07

www.tycoelectronics.com

Dimensions are in millimeters and inches unless otherwise specified. Values in brackets are standard equivalents.

Dimensions are shown for reference purposes only. Specifications subject to change.

USA: 1-800-522-6752
Canada: 1-905-470-4425
Mexico: 01-800-733-8926
C. America: 52-55-1106-0803

South America: 55-11-2103-6000
Hong Kong: 852-2735-1628
Japan: 81-44-844-8013
UK: 44-8706-080-208

Appendix D - Typical Coaxial Cable Specifications (Continued)

RG/U Type Cable	Inner Conductor	Dielectric Material	DOD	Number/Type of Shielding Braids	Jacket Material	O.D.	Weight (lb/ft)	Nom. Imped. (Ohms)	Nom. Cap pf/ft	Max. Operating Temp. (C°)	Max. Operating Voltage (Volts RMS)	Comments
43	2 Cond. **2.17** .0855 7/**0.72** BC .0285	Rubber-B	**11.99** .427	1/BC	PVC-I	**15.67** .617	—	95	17.6	−40 +80	1500	Use RG 57
54	**1.21** .0477 7/**0.4** BC .0159	PE	**4.7** .185	1/BC	PVC-I	**6.99** .275	.045	58	27.0	−40 +80	2500	Use RG 54A
54A	**1.16** .0456 7/**0.39** BC .0152	PE	**4.52** .178	1/TC	PE-III	**6.22** 2.45	.041	58	26.5	−55 +80	3000	Use up to 1000 MHz
55	**0.81** BC .0320	PE	**2.95** .116	2/TC	PE-III	**5.08** .200	.032	53.5	28.5	−55 +80	1900	Use RG 55B
55A	**.0.89** SC .0350	PE	**2.95** .116	2/SC	PVC-IIA	**5.08** .200	.034	50	30.8	−40 +80	1900	Use RG 223
55B	**0.81** SC .0320	PE	**2.95** .116	2/TC	PE-IIIA	**5.08** .200	.033	53.5	28.5	−55 +80	1900	Use up to 1000 MHz
56	**1.49** .0585 19/**0.3** BC .0117	Rubber-D	**7.82** .308	2/BC	PVC-I	**13.59** .535	.243	48	50.0	−40 +80	8000	—
57	2 Cond. **2.17** .0855 7/**0.72** BC .0285	PE	**11.99** .472	1/TC	PVC-I	**15.88** .625	.225	95	17.0	−40 +80	3000	Balanced Line Parallel
57A	2 Cond. **2.17** .0855 7/**0.72** BC .0285	PE	**11.99** .472	1/TC	PVC-IIA	**15.88** .625	.225	95	17.0	−40 +80	3000	Balanced Line Parallel
58	**0.81** BC .0320	PE	**2.95** .116	1/TC	PVC-I	**4.95** .195	.029	53.5	28.5	−40 +80	1900	Use RG 58B
58A	**0.9** .0355	PE	**2.95** .116	1/TC	PVC-I	**4.95** .195	.029	52	28.5	−40 +80	1900	Use RG 58C
58B	**0.81** BC .0320	PE	**2.95** .116	1/TC	PVC-IIA	**4.95** .195	.029	53.5	28.5	−40 +80	1900	Use up to 1000 MHz
58C	**0.9** .0355 19/**0.8** TC .0071	PE	**2.95** .116	1/TC	PVC-IIA	**4.95** .195	.029	50	30.8	−40 +80	1900	Extra Flexible Version RG 58B
59	**0.64** CCS .0253	PE	**3.71** .146	1/BC	PVC-I	**6.15** .242	.032	73	21.0	−40 +80	2300	Use RG 59B
59A	**0.64** CCS .0253	PE	**3.71** .146	1/BC	PVC-IIA	**6.15** .242	.032	73	21.0	−40 +80	2300	Use RG 59B
59B	**0.58** CCS .0230	PE	**3.71** .146	1/BC	PVC-IIA	**6.15** .242	.032	75	20.6	−40 +80	2300	Use up to 1000 MHz
60	**1.29** Str. C .0508	Rubber-C	**6.35** .250	1/BC	Rubber-IV	**10.8** .425	.150	50	39.0	−40 +80	1100	—
62	**0.64** CCS .0253	Air-space PE	**3.71** .146	1/BC	PVC-I	**6.15** .242	.038	93	13.5	−40 +80	750	Use RG 62A Low
62A	**0.64** CCS .0253	Air-space PE	**3.71** .146	1/BC	PVC-IIA	**6.15** .242	.038	93	13.5	−40 +80	750	Capacitance
62B	**0.61** .0240 7/**0.2** CCS .0080	Air-space PE	**3.71** .146	1/BC	PVC-IIA	**6.15** .242	.038	93	13.5	−40 +80	750	Extra Flexible RG 62A
63	**0.64** CCS .0253	Air-space PE	**7.24** .285	1/BC	PVC-I	**10.29** .405	.083	125	10.0	−40 +80	1000	Use RG 63B
63A	**0.64** BC .0253	Air-space PE	**7.24** .285	1/BC	PVC-I	**10.29** .405	.083	125	10.0	−40 +80	1000	Use RG 63B
63B	**0.64** CCS .0253	Air-space PE	**7.24** .285	1/BC	PVC-IIA	**10.29** .405	.083	125	10.0	−40 +80	1000	Low Capacitance
64	**1.49** .0585 19/**0.3** TC .0117	Rubber-D	**7.82** .308 **7.24** .285	2/TC	Rubber-IV	**12.57** .495 **10.29** .405	.225	48	60.0	−40 +80	10,000	— Capacitance
64A	**1.49** .0585 19/**0.3** TC .0117	Rubber-E	**7.32** .288	2/TC	Rubber-IV	**11.68** .460	.205	48	50.0	−40 +80	10,000	—
65	**0.2** [.0080] Formex-F **3.25** [.1280] Dia. Helix	PE	**7.24** .285	1/BC	PVC-I	**10.29** .405	.096	950	44.0	−40 +80	1000	High Impedance Video Delay Line

Catalog 1307191
Revised 3-07

www.tycoelectronics.com

Dimensions are in millimeters and inches unless otherwise specified. Values in brackets are standard equivalents.

Dimensions are shown for reference purposes only. Specifications subject to change.

USA: 1-800-522-6752
Canada: 1-905-470-4425
Mexico: 01-800-733-8926
C. America: 52-55-1106-0803

South America: 55-11-2103-6000
Hong Kong: 852-2735-1628
Japan: 81-44-844-8013
UK: 44-8706-080-208

Appendix D - Typical Coaxial Cable Specifications (Continued)

RG/U Type Cable	Inner Conductor	Dielectric Material	DOD	Number/Type of Shielding Braids	Jacket Material	O.D.	Weight (lb/ft)	Nom. Imped. (Ohms)	Nom. Cap pf/ft	Max. Operating Temp. (C°)	Max. Operating Voltage (Volts RMS)	Comments
65A	**.02** [.0080] Formex-F **3.25** [.1280] Dia. Helix	PE	**7.24** .285	1/BC	PVC-IIA	**10.29** .405	.096	950	44.0	−40 +80	1000	High Impedance Video Delay Line
71	**0.64** CCS .0253	Air-space PE	**3.71** .146	2/TC	PVC-I	**6.22** .245	.046	93	13.5	−40 +80	750	Use RG 71B
71A	**0.64** CCS .0253	Air-space PE	**3.71** .146	2/TC	PE-III	**6.22** .245	.046	93	13.5	−55 +80	750	Use RG 71B
71B	**0.64** CCS .0253	Air-space PE	**3.71** .146	2/TC	PE-IIIA	**6.22** .245	.046	93	13.5	−55 +80	750	Low Capacitance
72	**0.64** CCS .0253	Air-space PE	**11.68** .460	1/BC	PVC-I	**16** .630	.169	150	7.8	−40 +80	750	Low Capacitance
73	**1.65** BC .0650	PE	**2.95** .116	2/BC	Copper Braid	**4.45** .175	.031	25	61.8	−55 +80	1000	Low Impedance
74	**2.59** BC .1020	PE	**9.4** .370	2/BC	PVC-II w/Armor	**15.32** .603	.310	52	29.5	−40 +80	5500	Use RG 224
74A	**2.59** BC .1020	PE	**9.4** .370	2/BC	PVC-IIA w/Armor	**15.32** .603	.310	52	29.5	−40 +80	5500	Use RG 224
77A	**1.49** .0585 19/**0.3** TC .0117	Rubber-E	**7.32** .288	2/TC	PVC-IIA	**11.43** .450	.195	48	50.0	−40 +80	8000 Peak	—
78A	**1.49** .0585 19/**0.3** TC .0117	Rubber-E	**7.32** .288	1/TC	PVC-IIA	**10.67** .420	.149	48	50.0	−40 +80	8000 Peak	—
79	**0.64** CCS .0253	Air-space PE	**7.24** .285	1/BC	PVC-I w/Armor	**11.76** .463	.136	—	10.0	−40 +80	1000	Low Capacitance
79A	**0.64** CCS .0253	Air-space PE	**7.24** .285	1/BC	PVC-I w/Armor	**11.76** .463	.130	.125	10.0	−40 +80	1000	Low Capacitance
79B	**0.64** CCS .0253	Air-space PE	**7.24** .285	1/BC	PVC-IIA w/Armor	**11.76** .463	.136	.125	10.0	−40 +80	1000	Low Capacitance
81	**1.59** BC .0625	Magnesium Oxide G	**8.15** .321	None	Copper Tube	**8.26** .325	.172	50	37.0	250	3000	—
82	**3.18** BC .1250	Magnesium Oxide G	**16.51** .650	None	Copper Tube	**19.05** .750	.698	50	36.0	250	5000	—
83	**2.59** BC .1020	PE	**6.1** .240	1/BC	PVC-I	**10.29** .405	.120	35	44.0	−40 +80	2000	Low Impedance
84A	**2.65** BC .1045	PE	**17.27** .680	1/BC	PVC-IIA w/Lead Sheath	**25.4** 1.000	1.325	75	20.6	−40 +80	10,000	RG 35B with Special Armor
85A	**2.65** BC .1045	PE	**17.27** .680	1/BC	PVC-IIA w/Lead Armor	**39.75** 1.565	2.910	75	20.6	−40 +80	10,000	RG 84A with Special Armor
86	2 Cond. **2.17** .0855 7/**0.72** BC .0285	PE	**7.62** .300 x **16.51** .650	None	None	**7.62** .300 x **16.51** .650	.100	200	7.8	−55 +80	10,000	Twin Lead
87A	**2.44** .0960 7/**0.81** SC .0320	PTFE	**7.11** .280	2/SC	FG Braid-V	**10.8** .425	.180	50	29.4	−55 +250	5000	Use RG 225
88	**1.49** .0585 19/**0.3** TC .0117	Rubber-E	**7.32** .288	4/TC	PVC-I	**13.08** .515	.211	48	50.0	−40 +80	10,000	—
88A	**1.49** .0585 19/**0.3** TC .0117	Ruber-E	**7.32** .288	4/TC	PVC-IIA	**13.08** .515	.211	48	50.0	−40 +80	10,000	—
88B	**1.49** .0585 19/**0.3** TC .0117	Rubber-E	**7.32** .288	4/TC	Rubber-IV	**14.35** .565	.238	48	50.0	−40 +80	10,000	—
89	**0.64** CCS .0253	Air-space PE	**7.24** .285	1/BC	PVC-I	**16.05** .632	.195	125	10.0	−40 +80	1000	Low Capacitance
90	**1.53** .0603 7/**0.51** SC .0201	PE	**4.95** .195	3/SC, GS, SC	PVC-IIA	**10.8** .425	—	50	30.8	−40 +80	3000	Excellent Shielding
93	**5.08** .2000 19/**1.02** BC .0400	Taped PTFE	**14.55** .573	1/BC	FG Braid-V	**18.03** .710	.475	50	29.4	−55 +250	10,000	Use RG 211A

Catalog 1307191
Revised 3-07

www.tycoelectronics.com

Dimensions are in millimeters and inches unless otherwise specified. Values in brackets are standard equivalents.

Dimensions are shown for reference purposes only. Specifications subject to change.

USA: 1-800-522-6752
Canada: 1-905-470-4425
Mexico: 01-800-733-8926
C. America: 52-55-1106-0803

South America: 55-11-2103-6000
Hong Kong: 852-2735-1628
Japan: 81-44-844-8013
UK: 44-8706-080-208

Appendix D - Typical Coaxial Cable Specifications (Continued)

RG/U Type Cable	Inner Conductor	Dielectric Material	DOD	Number/Type of Shielding Braids	Jacket Material	O.D.	Weight (lb/ft)	Nom. Imped. (Ohms)	Nom. Cap pf/ft	Max. Operating Temp. (C°)	Max. Operating Voltage (Volts RMS)	Comments
94	**2.86** .1125 19/**0.57** SC .0225	Taped PTFE	**7.42** .292	2/BC	FG Braid-V	**11.3** .445	.270	50	29.4	−55 +250	7000	Use RG 226
94A	**3.23** .1270 19/**0.65** SC .0254	Taped PTFE	**9.4** .370	2/BC	FG Braid-V	**12.7** .500	.445	50	29.4	−55 +250	7000	Use RG 226
100	**1.87** .0735 19/**0.37** BC .0147	PE	**3.71** .146	1/BC	PVC-I	**6.15** .242	.046	35	44.0	−40 +80	2000	Use up to 1000 MHz
101	**1.63** BC .0641	Rubber	—	1/TC	—	**14.94** .588	—	75	—	—	—	—
102	2 Cond. **2.05** BC .0808	Rubber	—	1/TC	—	**27.64** 1.088	—	140	—	—	—	—
108	2 Cond. **0.96** .0378 7/**0.32** TC .0126	PE	**2.01** .079 Each	1/TC	PVC-II	**5.97** .235	.032	78	19.6	−40 +80	1000	Use RG 108A
108A	2 Cond. **0.96** .0378 7/**0.32** TC .0126	PE	**2.01** .079 Each	1/TC	PVC-IIA	**5.97** .235	.032	78	19.6	−40 +80	1000	Balanced Line
111	2 Cond. **1.16** .0456 7/**0.39** BC .0152	PE	**7.24** .285	2/TC	PVC-II w/Armor	**12.14** .478	.146	95	16.0	−40 +80	1000	Use RG 111A
111A	2 Cond. **1.16** .0456 7/**0.39** BC .0152	PE	**7.24** .285	2/TC	PVC-IIA w/Armor	**12.14** .478	.146	95	16.0	−40 +80	1000	Use RG 22B w/Armor
114	**0.18** CCS .0070	Air-space PE	**7.24** .285	1/BC	PVC-I	**10.29** .405	.087	185	6.5	−40 +80	1000	Use RG 114A
114A	**0.18** CCS .0070	Air-space PE	**7.24** .285	1/BC	PVC-IIA	**10.29** .405	.087	185	6.5	−40 +80	1000	Low Capacitance
115	**2.13** .0840 7/**0.71** SC .0280	Taped PTFE	**6.35** .250	2/BC	FG Braid-V	**9.53** .375	.148	50	29.4	−55 +250	5000	Use RG 115A
115A	**2.13** .0840 7/**0.71** SC .0280	Taped PTFE	**6.48** .255	2/BC	FG Braid-V	**10.54** .415	.180	50	29.4	−55 +250	5000	Extra Flexible RG 225
116	**2.44** .0960 7/**0.81** SC .0320	PTFE	**7.11** .280	2/SC	FG Braid-V w/Armor	**12.7** .475	.198	50	29.4	−55 +250	5000	Use RG 227
117	**4.78** BC .1880	PTFE	**15.75** .620	1/BC	FG Braid-V	**18.54** .730	.641	50	29.4	−55 +250	7000	Use RG 211A
117A	**4.78** BC .1880	PTFE	**15.75** .620	1/BC	FG Braid-V	**18.54** .730	.641	50	29.4	−55 +250	7000	Use RG 211A
118	**4.78** BC .1880	PTFE	**15.75** .620	1/BC	FG Braid-V w/Armor	**19.81** .780	.682	50	29.4	−55 +250	7000	Use RG 228A
118A	**4.78** BC .1880	PTFE	**15.75** .620	1/BC	FG Braid-V w/Armor	**19.81** .780	.682	50	29.4	−55 +250	7000	Use RG 228A
119	**2.59** BC .1020	PTFE	**8.43** .332	2/BC	FG Braid-V	**11.81** .465	.225	50	29.4	−55 +250	6000	Use up to 1000 MHz
120	**2.59** BC .1020	PTFE	**8.43** .332	2/BC	FG Braid-V	**13.28** .523	.282	50	29.4	−55 +250	6000	RG 119 w/Armor
122	**0.76** .0300 7/**0.13** TC .0050	PE	**2.44** .096	1/TC	PVC-IIA	**4.06** .160	.016	50	29.4	−40 +80	1900	Use up to 1000 MHz
124	**0.64** TCCS .0253	Taped PTFE	**3.43** .135	1/TC	FG Braid-V	**6.1** .240	.210	73	20.3	−55 +250	2300	Use RG 140
125	**0.4** CCS .0159	Air-space PE	**11.68** .460	1/BC	PVC-IIA	**15.24** .600	.180	150	7.8	−40 +80	2000	Low Capacitance
126	**1.55** .0609 7/**0.52** HR .0203	PTFE	**4.7** .185	1/HR	FG Braid-V	**7.11** .280	.070	50	29.4	−55 +250	3000	High Loss Cable

Catalog 1307191
Revised 3-07

www.tycoelectronics.com

Dimensions are in millimeters and inches unless otherwise specified. Values in brackets are standard equivalents.

Dimensions are shown for reference purposes only. Specifications subject to change.

USA: 1-800-522-6752
Canada: 1-905-470-4425
Mexico: 01-800-733-8926
C. America: 52-55-1106-0803

South America: 55-11-2103-6000
Hong Kong: 852-2735-1628
Japan: 81-44-844-8013
UK: 44-8706-080-208

Appendix D - Typical Coaxial Cable Specifications (Continued)

RG/U Type Cable	Inner Conductor	Dielectric Material	DOD	Number/Type of Shielding Braids	Jacket Material	O.D.	Weight (lb/ft)	Nom. Imped. (Ohms)	Nom. Cap pf/ft	Max. Operating Temp. (C°)	Max. Operating Voltage (Volts RMS)	Comments
130	2 Cond. **2.17** .0855 7/**0.72** BC .0285	PE	**11.99** .472	1/TC	PVC-I	**15.88** .625	.220	95	17.0	−40 +80	3000	RG 57 w/ Twisted Cond.
131	2 Cond. **2.17** .0855 7/**0.72** BC .0285	PE	**11.99** .472	1/TC	PVC-I w/Armor	**17.35** .683	.290	95	17.0	−40 +80	3000	Armored RG 130
133	**0.72** BC .0285	PE	**7.24** .285	1/BC	PVC-I	**10.29** .405	.094	95	16.2	−40 +80	4000	Use RG 133A
133A	**0.64** BC .0253	PE	**7.24** .285	1/BC	PVC-IIA	**10.29** .405	.094	95	16.2	−40 +80	4000	95 Ohm Version RG 8
140	**0.64** SCCS .0250	PTFE	**3.71** 1.46	1/SC	FG Braid-V	**5.92** .233	.056	75	19.5	−55 +250	2300	See RG 302 for FEP Jacket
141	**0.91** SCCS .0359	PTFE	**2.95** .116	1/SC	FG Braid-V	**4.83** .190	.036	50	29.4	−55 +250	1900	Use RG 141A
141A	**0.99** SCCS .0390	PTFE	**2.95** .116	1/SC	FG Braid-V	**4.83** .190	.036	50	29.4	−55 +250	1900	See RG 303 for FEP Jacket
142	**0.91** SCCS .0359	PTFE	**2.95** .116	2/SC	FG Braid-V	**4.95** .195	.047	50	29.4	−55 +250	1900	Use RG 142A
142A	**0.99** SCCS .0390	PTFE	**2.95** .116	2/SC	FG	**4.95** .195	.047	50	29.4	−50 +250	1900	See RG 142B for FEP Jacket
142B	**0.99** SCCS .0390	PTFE	**2.95** .116	2/SC	FEP	**4.95** .195	.047	50	29.4	−55 +250	1900	Standard Center Cond. Available
143	**1.45** SCCS .0570	PTFE	**4.7** .185	2/SC	FG Braid-V	**8.26** .325	.114	50	29.4	−55 +250	3000	Use RG 143A
143A	**1.5** SCCS .0590	PTFE	**4.7** .185	1/SC	FG Braid-V	**8.26** .325	.109	50	29.4	−55 +250	3000	See RG 304 for FEP Jacket
144	**1.36** .0537 7/**0.45** SCCS .0179	Air-space PE	**7.24** .285	Copper Tube	FG Braid-V	**10.41** .410	.137	75	19.5	−55 +250	5000	High Temp. RG 11A
145	2 Cond. **1.83** BC .0720	Air-space PTFE	—	1/BC	Lead/Tar	—	—	75	14.6	—	—	—
146	**0.18** CCS .0070	PE	**7.24** .285	1/BC	FG Braid-V	**9.53** .375	.108	190	6.0	−55 +200	1000	Low Capacitance
147	**6.35** BC .2500	PE	**23.11** .910	1/BC	PVC-I w/Armor	**49.2** 1.937	—	52	29.5	−40 +80	14,000	RG 19U w/Armor
148	**2.17** .0855 7/**0.72** BC .0285	PTFE	**7.24** .285	1/SC	PVC-I w/Armor	**20.32** .800	—	52	29.5	−40 +80	4000	—
149	**1.22** .048 7/**0.4** TC .0159	PE	**7.24** .285	1/BC	PVC-IIA	**10.29** .405	.105	75	20.6	−40 +80	5000	Use RG 391
150	**1.22** .048 7/**0.4** TC .0159	PE	**7.24** .285	1/BC	PVC-IIA w/Armor	**11.76** .463	.112	75	20.6	−40 +80	5000	Use RG 392
156	**2.17** .0855 7/**0.72** TC .0285	PE and Cond. PE	**7.24** .285	3/TC, GS, TC	PVC-IIA	**13.72** .540	.211	50	32.0	−40 +80	10,000	Triaxial Pulse Cable
157	**2.55** .1005 19/**0.51** TC .0201	PE and Cond. PE	**11.56** .455	3/TC, GS, TC	PVC-IIA	**18.42** .725	.317	50	38.0	−40 +80	15,000	Triaxial Pulse Cable
158	**5.05** .1988 37/**0.72** TC .0284	PE and Cond. PE	**11.56** .455	3/TC, GS, TC	PVC-IIA	**18.42** .725	.380	25	78.0	−40 +80	15,000	Triaxial Pulse Cable
159	**0.81** SC .0320	Taped PTFE	**2.95** .116	1/SC	FG Braid-V	**4.95** .195	.035	50	29.4	−55 +250	1900	Use RG 141
160	4 Cond. **1.8** .071 19/**0.36** 2TC, 2BC .0142	PE	**8.18** .322	1/BC	PVC-I	**26.8** 1.055	—	125	12.0	−40 +80	3000	4 Cond. Balanced Line
161	**0.3** .012 7/**0.1** S Cad. BR .004	PTFE	**1.45** .057	1/SC	Nylon	**2.08** .082	.015	70	20.0	−60 +120	1000	Miniature
164	**2.65** BC .1045	PE	**17.27** .680	1/BC	PVC-IIA	**22.1** .870	.490	75	20.6	−40 +80	10,000	RG 35B without Armor

Catalog 1307191
Revised 3-07

www.tycoelectronics.com

Dimensions are in millimeters and inches unless otherwise specified. Values in brackets are standard equivalents.

Dimensions are shown for reference purposes only. Specifications subject to change.

USA: 1-800-522-6752
Canada: 1-905-470-4425
Mexico: 01-800-733-8926
C. America: 52-55-1106-0803

South America: 55-11-2103-6000
Hong Kong: 852-2735-1628
Japan: 81-44-844-8013
UK: 44-8706-080-208

Appendix D - Typical Coaxial Cable Specifications (Continued)

RG/U Type Cable	Inner Conductor	Dielectric Material	DOD	Number/Type of Shielding Braids	Jacket Material	O.D.	Weight (lb/ft)	Nom. Imped. (Ohms)	Nom. Cap pf/ft	Max. Operating Temp. (C°)	Max. Operating Voltage (Volts RMS)	Comments
165	**2.44** .0960 7/**0.81** SC .0320	PTFE	**7.24** .285	1/SC	FG Braid-V	**10.41** .410	.121	50	29.4	−55 +250	5000	RG 225 w/One Braid
166	**2.44** .0960 7/**0.81** SC .0320	PTFE	**7.24** .285	1/SC	FG Braid-V w/Armor	**11.68** .460	.144	50	29.4	−55 +250	5000	RG 165 w/ Armor
174	**0.48** .0189 7/**0.16** CCS .0063	PE	**1.52** .060	1/TC	PVC	**2.54** .100	.008	50	30.8	−40 +80	1500	Miniature Data Transmission
174A	**0.48** .0189 7/**0.16** CCS .0063	PE	**1.52** .060	1/TC	PVC-IIA	**2.54** .100	.008	50	30.8	−40 +80	1500	Miniature Data Transmission
176	**3.43** .135 Helix over Magnetic Core	PE	**7.24** .285	1/Magnet Wire	PVC-I	**10.29** .405	.120	2240	49.0	−40 +80	5000	—
177	**4.95** BC .195	PE	**17.27** .680	2/SC	PVC-IIA	**22.73** .895	.470	50	30.8	−40 +80	11,000	High Frequency RG 218
178	**0.3** .0120 7/**0.1** SCCS .0040	PTFE	**0.91** .036	1/SC	KEL-F	**1.83** .072	.0054	50	29.4	−40 +150	1000	Use RG 178B
178A	**0.3** .0120 7/**0.1** SCCS .0040	PTFE	**0.86** .034	1/SC	KEL-F	**1.83** .072	.005	50	29.4	−40 +150	1000	Use RG 178B
178B	**0.3** .0120 7/**0.1** SCCS .0040	PTFE	**0.86** .034	1/SC	FEP-IX	**1.83** .072	.0054	50	29.4	−55 +200	1000	High Strength Cond. Available
179	**0.3** .0120 7/**0.1** SCCS .0040	PTFE	**1.45** .057	1/SC	KEL-F	**2.54** .100	.010	70	20.4	−55 +150	1200	Use RG 179B
179A	**0.3** .0120 7/**0.1** SCCS .0040	PTFE	**1.6** .063	1/SC	KEL-F	**2.54** .100	.010	75	19.5	−40 +150	1200	Use RG 179B
179B	**0.3** .0120 7/**0.1** SCCS .0040	PTFE	**1.6** .063	1/SC	FEP-IX	**2.54** .100	.010	75	19.5	−55 +200	1200	High Strength Cond. Available
180	**0.3** .0120 7/**0.1** SCCS .0040	PTFE	**2.62** .103	1/SC	KEL-F	**3.56** .140	.019	93	15.4	−40 +150	1500	Use RG 180B
180A	**0.3** .0120 7/**0.1** SCCS .0040	PTFE	**2.59** .102	1/SC	KEL-F	**3.56** .140	.019	95	15.4	−40 +150	1500	Use RG 180B
180B	**0.3** .0120 7/**0.1** SCCS .0040	PTFE	**2.59** .102	1/SC	KEP-IX	**3.56** .140	.019	95	15.4	−55 +200	1500	High Strength Cond. Available
181	2 Cond. **1.21** .0477 7/**0.4** BC .0159	PE	**5.33** .210	2/Individual Inner Common Outer BC	PVS-IIA	**16.25** .640	.198	125	12.0	−40 +80	3500	Balanced Line
182	2 of 19/**0.36** BC .0142 2 of 19/**0.17** TC .0066	4 Cores PE	2/**8.43** .332 2/**3.71** .146	Each Core 1/BC Overall Shield 1/BC	PVC-IIA each PVC-I overall	**26.8** 1.055	—	125 each	12.0 each	−40 +80	2300 3000	Special 4 Coaxial
183	**6.38** BC .2510	PS Helix	**16.05** .632	Al. Tube	None	**19.05** .750	.380	50	23.0	−40 +80	1800	See Times AM-5034S
185	**0.08** [.0031] Mag. Wire Helix on PE Core	Air-Space PE	**4.78** .188	1/Magnet Wire	PVC-IIA	**7.16** .282	—	2000	—	−40 +80	—	Delay Line Cable

Catalog 1307191
Revised 3-07

www.tycoelectronics.com

Dimensions are in millimeters and inches unless otherwise specified. Values in brackets are standard equivalents.

Dimensions are shown for reference purposes only. Specifications subject to change.

USA: 1-800-522-6752
Canada: 1-905-470-4425
Mexico: 01-800-733-8926
C. America: 52-55-1106-0803

South America: 55-11-2103-6000
Hong Kong: 852-2735-1628
Japan: 81-44-844-8013
UK: 44-8706-080-208

Appendix D - Typical Coaxial Cable Specifications (Continued)

RG/U Type Cable	Inner Conductor	Dielectric Material	DOD	Number/Type of Shielding Braids	Jacket Material	O.D.	Weight (lb/ft)	Nom. Imped. (Ohms)	Nom. Cap pf/ft	Max. Operating Temp. (C°)	Max. Operating Voltage (Volts RMS)	Comments
187	**0.3** .0120 7/**0.1** SCCS .0040	PTFE	**1.52** .060	1/SC	PTFE	**2.67** .105	.010	75	19.5	−55 +250	1200	Use RG 179B
187A	**0.3** .0120 7/**0.1** SCCS .0040	PTFE	**1.52** .060	1/SC	PTFE	**2.67** .105	.010	75	19.5	−55 +250	1200	Use RG 179B
188	**0.51** .0201 7/**0.17** SCCS .0067	PTFE	**1.52** .060	1/SC	PTFE	**2.67** .105	.011	50	29.4	−55 +250	1200	Use RG 316
188A	**0.51** .0201 7/**0.17** SCCS .0067	PTFE	**1.52** .060	1/SC	PTFE	**2.67** .105	.011	50	29.4	−55 +250	1200	Use RG 316
189	**6.38** BC .2510	PS Helix	**16.05** .632	2/SC	PE-IIIA	**22.23** .875	.570	50	23.0	−55 +80	3500	Use RG 389
190	**1.49** .0585 7/**0.3** TC .0117	Rubber H, J	**9.65** .380	3/TC, GS, TC	Neoprene VIII	**17.78** .700	.353	50	50.0	−55 +80	15,000	—
191	**12.32** TC Braid .485	Rubber H, J, H	**27.05** 1.065	3/TC, GS, GS	Neoprene VIII	**37.08** 1.460	1.469	25	85.0	−55 +80	15,000	—
192	**26.8** GS Tube 1.055 TC Braid	Butyl Rubber	—	3/TC, GS, GS	Rubber	**55.88** 2.200	—	12.5	175.0	−55 +80	15,000 Peak	—
193	**26.8** GS Tube 1.055 TC Braid	Silicone Rubber	—	3/TC, GS, GS	Rubber	**53.34** 2.100	—	12.5	159.0	−55 +80	30,000 Peak	—
194	**26.8** GS Tube 1.055 TC Braid	Silicone Rubber	—	3/TC, GS, GS	Rubber w/ Al. Armor	**49.4** 1.945	—	12.5	159.0	−55 +80	30,000 Peak	—
195	**0.3** .0120 7/**0.1** SCCS .004	PTFE	**2.59** .102	1/SC	PTFE	**3.68** .145	.020	95	15.4	−55 +250	1500	Use RG 180B
195A	**0.3** .0120 7/**0.1** SCCS .004	PTFE	**2.59** .102	1/SC	PTFE	**3.68** .145	.020	95	15.4	−55 +250	1500	Use RG 180B
196	**0.3** .0120 7/**0.1** SCCS .004	PTFE	**0.86** .034	1/SC	PTFE	**1.83** .072	.006	50	29.4	−55 +250	1000	Use RG 178B
196A	**0.3** .0120 7/**0.1** SCCS .004	PTFE	**0.86** .034	1/SC	PTFE	**1.83** .072	.006	50	29.4	−55 +250	1000	Use RG 178B
197	**7.62** BC .300	PS Helix	**19.25** .758	**22.23** [.875] OD Al. Tube	None	**22.23** .875	.500	50	22.0	−55 +80	2400 Peak	—
198	**2.9** BC .1140	PS Helix	**10.69** .421	**12.7** [.500] OD Al. Tube	PE	**15.24** .600	.155	70	16.0	−55 +80	1300 Peak	—
199	**5.31** BC .209	PS Helix	**19.25** .758	**22.23** [.875] OD Al. Tube	PE	**25.78** 1.015	.435	70	16.0	−55 +80	2400 Peak	—
200	OD-**10.29** .405 ID-**7.65** BC Tube .301	PS Helix	**37.39** 1.472	**41.28** [1.625] OD Al. Tube	PE	**44.83** 1.765	.900	70	16.0	−55 +80	4600 Peak	—
209	**4.8** .189 19/**0.96** SC .0378	Air-Space PTFE	**12.7** .500	2/SC	SR and Polyester-IV	**18.42** .725	.432	50	25.0	−55 +150	3200	Low Loss RG 211A
210	**0.64** SCCS .0253	Air-Space PTFE	**3.71** .146	1/SC	FG Braid-V	**6.15** .242	.040	93	13.5	−55 +250	750	High Temp. Low Capacitance
211	**4.83** BC .1900	PTFE	**15.75** .620	1/BC	FG Braid-V	**18.54** .730	.641	50	29.4	−55 +250	7000	High Temp. High Power
211A	**4.83** BC .1900	PTFE	**15.75** .620	1/BC	FG Braid-V	**18.54** .730	.641	50	29.4	−55 +250	7000	High Temp. High Power
212	**1.44** SC .0556	PE	**4.7** .185	2/SC	PVC-IIA	**8.43** .332	.083	50	29.4	−40 +80	3000	Use up to 10,000 MHz
213	**2.26** .0888 7/**0.75** BC .0296	PE	**7.24** .285	1/BC	PVC-IIA	**10.29** .405	.099	50	30.8	−40 +80	5000	Use up to 1000 MHz

Catalog 1307191
Revised 3-07

www.tycoelectronics.com

Dimensions are in millimeters and inches unless otherwise specified. Values in brackets are standard equivalents.

Dimensions are shown for reference purposes only. Specifications subject to change.

USA: 1-800-522-6752
Canada: 1-905-470-4425
Mexico: 01-800-733-8926
C. America: 52-55-1106-0803

South America: 55-11-2103-6000
Hong Kong: 852-2735-1628
Japan: 81-44-844-8013
UK: 44-8706-080-208

Appendix D - Typical Coaxial Cable Specifications (Continued)

RG/U Type Cable	Inner Conductor	Dielectric Material	DOD	Number/Type of Shielding Braids	Jacket Material	O.D.	Weight (lb/ft)	Nom. Imped. (Ohms)	Nom. Cap pf/ft	Max. Operating Temp. (C°)	Max. Operating Voltage (Volts RMS)	Comments
214	**2.26** .0888 7/**0.75** SC .0296	PE	**7.24** .285	2/SC	PVC-IIA	**10.0** .425	.126	50	30.8	−40 +80	5000	Use up to 10,000 MHz
215	**2.26** .0888 7/**0.75** .0296	PE	**7.24** .285	1/BC	PVC-IIA w/Armor	**11.76** .463	.121	50	30.8	−40 +80	5000	Armored RG 213
216	**1.21** .0477 7/**0.75** BC .0159	PE	**7.24** .285	2/BC	PVC-IIA	**10.8** .425	.114	75	20.6	−40 +80	5000	Use up to 1000 MHz
217	**2.7** BC .106	PE	**9.4** .370	2/BC	PVC-IIA	**13.84** .545	.201	50	30.8	−40 +80	7000	Use up to 1000 MHz
218	**4.95** BC .195	PE	**17.27** .680	1/BC	PVC-IIA	**22.1** .870	.460	50	30.8	−40 +80	11,000	Use up to 1000 MHz
219	**4.95** BC .195	PE	**17.27** .680	1/BC	PVC-IIA w/Armor	**23.57** .928	.585	50	30.8	−40 +80	11,000	Armored RG 218
220	**6.6** BC .260	PE	**23.11** .910	1/BC	PVC-IIA	**28.45** 1.120	.740	50	30.8	−40 +80	14,000	Use up to 1000 MHz
221	**6.6** BC .260	PE	**23.11** .910	1/BC	PVC-IIA w/Armor	**29.92** 1.178	.925	50	30.8	−40 +80	14,000	Armored RG 220
222	**1.41** .0556 High Res. Wire	PE	**4.7** .185	2/SC	PVC-IIA	**8.43** .332	.087	50	30.8	−40 +80	3000	High Attenuation
223	**0.89** SC .035	PE	**2.95** .116	2/SC	PVC-IIA	**5.36** .211	.034	50	30.8	−40 +80	1900	Use up to 10,000 MHz
224	**2.609** BC .106	PE	**9.4** .370	2/BC	PVC-IIA w/Armor	**15.32** .603	.310	50	30.8	−40 +80	7000	Armored RG 217
225	**2.38** .0936 7/**0.79** SC .0312	PTFE	**7.24** .285	2/SC	FG Braid-V	**10.92** .430	.180	50	29.4	−55 +250	5000	See RG 393 for FEP Jacket
226	**3.23** .1270 19/**0.65** SC .0254	Taped PTFE	**9.4** .370	2/SC	FG Braid-V	**12.7** .500	.445	50	29.4	−55 +250	7000	—
227	**2.38** .0936 7/**0.79** SC .0312	PTFE	**7.24** .285	2/SC	FG Braid-V w/Armor	**12.40** .488	.198	50	29.4	−55 +250	5000	Armored RG 225
228	**4.83** BC .1900	PTFE	**15.75** .620	1/BC	FG Braid-V w/Armor	**20.02** .788	.682	50	29.4	−55 +250	7000	Armored RG 211
228A	**4.83** BC .1900	PTFE	**15.75** .620	1/BC	FG Braid-V w/Armor	**20.02** .788	.682	50	29.4	−55 +250	7000	Armored RG 211A
229	**2.44** .0960 7/**0.81** SC .032	PTFE	**7.24** .285	1/SC	FG Braid-V w/Armor	**11.68** .460	.144	50	29.4	−55 +250	5000	Use RG 166
230	**5.05** .1988 37/**0.72** TC .0284	Rubber-D	**11.56** .455	3/TC, GS, GS	Rubber-IV	**18.8** .740	—	25	100.0	−40 +80	15,000	—
231	OD-**4.11** .162 ID-**2.84** BC .112	Foam PE	**11.43** .450	**12.7** .500 OD Al. Tube	None	**12.7** .500	.118	50	25.0	−55 +80	5000 Peak	RG 331 for Jacketed Cable
232	**7.62** BC .300	PE Helix	**19.25** .758	**22.23** .875 OD Al. Tube	PE-IIIA	**28.07** 1.015	.570	50	22.0	−50 +80	2400 Peak	—
233	OD-**15.01** BC .591 ID-**12.22** .481	PS Helix	**37.39** 1.472	**41.28** 1.625 OD Al. Tube	PE-IIIA	**44.83** 1.765	1.050	50	22.0	−55 +80	4700 Peak	—
234	OD-**29.39** BC 1.570 ID-**25.78** 1.015	PS Helix	**70.49** 2.775	**79.38** 3.125 OD Al. Tube	PE-IIIA	**83.69** 3.295	3.110	50	22.0	−55 +80	8700 Peak	—
235	**2.16** .0852 7/**0.72** .0284	Taped PTFE	**5.72** .255	2/SC	SIL/DAC VI	**11.43** .450	.160	50	29.5	−55 +250	5000	RG 115A 235 w/VI Jacket

Catalog 1307191
Revised 3-07

www.tycoelectronics.com

Dimensions are in millimeters and inches unless otherwise specified. Values in brackets are standard equivalents.

Dimensions are shown for reference purposes only. Specifications subject to change.

USA: 1-800-522-6752
Canada: 1-905-470-4425
Mexico: 01-800-733-8926
C. America: 52-55-1106-0803

South America: 55-11-2103-6000
Hong Kong: 852-2735-1628
Japan: 81-44-844-8013
UK: 44-8706-080-208

Appendix D - Typical Coaxial Cable Specifications (Continued)

RG/U Type Cable	Inner Conductor	Dielectric Material	DOD	Number/Type of Shielding Braids	Jacket Material	O.D.	Weight (lb/ft)	Nom. Imped. (Ohms)	Nom. Cap pf/ft	Max. Operating Temp. (C°)	Max. Operating Voltage (Volts RMS)	Comments
236	**4.11** BC .1620	PS Helix	**10.69** .421	**12.7** [.500] OD Al. Tube	None	**12.7** .500	.165	50	24.0	−55 +80	1300 Peak	—
237	**4.11** BC .1620	PS Helix	**10.69** .421	**12.7** [.500] OD Al. Tube	PE-IIIA	**15.24** .600	.195	50	24.0	−55 +80	1300 Peak	—
238	—	—	—	—	—	—	—	—	—	—	—	Use RG 197/U
239	—	—	—	—	—	—	—	—	—	—	—	Use RG 232/U
240	OD-**15.01** BC .591 ID-**12.22** BC .481	PS Helix	**36.07** 1.420	**41.28** 1.625 OD Al. Tube	None	**41.28** 1.625	.930	50	22.0	−55 +80	4700	—
241	—	—	—	—	—	—	—	—	—	—	—	Use RG 233
242	OD-**29.39** 1.157 ID-**25.78** 1.0150	PS Helix	**72.39** 2.850	**79.38** 3.125 OD Al. Tube	None	**79.3** 3.125	2.700	50	22.0	−55 +80	8700 Peak	—
243	—	—	—	—	—	—	—	—	—	—	—	Use RG 234
244	**2.59** BC .102	PS Helix	**10.69** .421	**12.7** [.500] OD Al. Tube	None	**12.7** .500	.118	75	15.5	−55 +80	1200 Peak	—
245	**2.59** BC .102	PS Helix	**10.69** .421	**12.7** [.500] OD Al. Tube	PE-IIIA	**15.24** .600	.148	75	15.5	−55 +80	1200 Peak	—
246	**4.78** BC .1880	PS Helix	**19.25** .758	**22.23** [.875] OD Al. Tube	None	**22.23** .875	.348	75	15.2	−55 +80	2200 Peak	—
247	**4.78** BC .1880	PS Helix	**19.25** .758	**22.23** [.875] OD Al. Tube	PE-IIIA	**25.78** 1.015	.418	75	15.2	−55 +80	2200 Peak	—
248	OD-**9.5** BC .3740 ID-**6.96** 27.40	PS Helix	**37.39** 1.472	**41.28** 1.625 OD Al. Tube	None	**41.28** 1.625	.948	75	15.0	−55 +80	4300 Peak	—
249	OD-**9.5** BC .3740 ID-**6.96** 27.40	PS Helix	**37.39** 1.472	**41.28** 1.625	PE-IIIA	**44.83** 1.765	1.068	75	15.0	−55 +80	4300 Peak	—
250	**18.59** BC .732 **16.05** .632	PS Helix	**72.39** 2.850	**79.38** 3.125 OD Al. Tube	None	**79.38** 3.125	2.395	75	15.0	−55 +80	8500 Peak	—
251	**18.59** BC .732 **16.05** .632	PS Helix	**72.39** 2.850	**79.38** 3.125 OD Al. Tube	PE-IIIA	**32.95** 2.805	.175	75	15.0	−55 +80	8500 Peak	—
252	**4.24** BC .1670	PE Tubes	**11.58** .456	**13.46** [.530] OD Al. Tube	None	**13.46** .530	.225	50	24.0	−55 +80	1000	—
253	**4.24** BC .1670	PE Tubes	**11.58** .456	**13.46** [.530] OD Al. Tube	PE	**16.64** .655	.655	50	24.0	−55 +80	1000	—
254	**7.9** BC .3110	PE Tubes	**21.16** .833	**24.21** [.953] OD Al. Tube	PE	**27.94** 1.100	.555	50	24.0	−55 +80	1860	—
255	**7.9** BC .3110	PE Tubes	**21.16** .833	**24.21** [.953] OD Al. Tube	None	**24.21** .953	.550	50	24.0	−55 +80	1860	—
256	OD-**7.9** SC .3110 ID-**6.48** .2550	PTFE Tubes	**21.16** .833	**24.21** .953 OD Al. Tube	None	**24.21** .953	1.200	50	24.0	−55 +80	1860	—
257	OD-**15.39** .6060 ID-**1.23** BC .4860	PS Tubes	**41.2** 1.622	**45.36** 1.786 OD Al. Tube	None	**45.36** 1.786	1.380	50	24.0	−55 +80	3640	—
258	OD-**15.39** .6060 ID-**1.23** BC Tube .4860	PS Tubes	**41.2** 1.622	**45.36** 1.786 OD Al. Tube	PE	**48.92** 1.926	.100	50	24.0	−55 +80	3640	—
259	**2.92** BC Tube .1150	PTFE Tubes	**8.08** .318	**9.91** [.390] OD Al. Tube	None	**9.91** .390	.140	50	24.0	−55 +80	697	—
260	**2.92** BC Tube .1150	PE Tubes	**8.08** .318	**9.91** [.390] OD Al. Tube	PE-IIIA	**11.43** .450	.170	50	24.0	−55 +80	697	—
263	**4.37** BC .1720	Air-Space PTFE	**10.69** .421	Al. Tube	None	**12.7** .500	.336	50	21.5	−40 +250	1300 Peak	—
264	4 Cond. 19/**0.36** .0142 2 TC, 2 BC	PE	**4.47** .176 e/core	2 TC, 2 BC BC Overall	PVC-IIA	**19.05** .750	.327	36.8	41.0	−40 +80	2000	Use RG 264C

Catalog 1307191
Revised 3-07

www.tycoelectronics.com

Dimensions are in millimeters and inches unless otherwise specified. Values in brackets are standard equivalents.

Dimensions are shown for reference purposes only. Specifications subject to change.

USA: 1-800-522-6752
Canada: 1-905-470-4425
Mexico: 01-800-733-8926
C. America: 52-55-1106-0803

South America: 55-11-2103-6000
Hong Kong: 852-2735-1628
Japan: 81-44-844-8013
UK: 44-8706-080-208

Appendix D - Typical Coaxial Cable Specifications (Continued)

RG/U Type Cable	Inner Conductor	Dielectric Material	DOD	Number/Type of Shielding Braids	Jacket Material	O.D.	Weight (lb/ft)	Nom. Imped. (Ohms)	Nom. Cap pf/ft	Max. Operating Temp. (C°)	Max. Operating Voltage (Volts RMS)	Comments
264A	4 Cond. 19/**0.36** .0142 2 TC, 2 BC	PE	**4.47** .176 e/core	2 TC, 2 BC BC Overall	PUR	**19.05** .750	.327	36.8	41.0	−40 +80	2000	Use RG 264C
264C	4 Cond. **1.73** .068 2 BC, 2 TC	PE	**4.72** .186 e/core	2 TC, 2 BC BC Overall	PUR	**19.43** .765	—	40	38.4	−40 +80	2000	Watertight 4 Coax.
265	**17.2** BC Tube .6770	PE Helix	**40.08** 1.578	Copper Clad Mild Steel Tube	PE-IIIA	**52.58** 2.070	.120	50	22.3	−40 +80	145 KW Peak	—
266	**0.29** Cond. Over .0113 **3.66** Mag. Core .144	PE	**7.24** .285	75 Spiral Wound Cond. 68 BC & 7 are Insulated	PVC-I	**10.16** .400	—	1530	53.0	−40 +80	5000 DC	Delay Line Cable 50 ns/ft
267	**9.02** BC Tube .3550	PS Helix	—	Copper Clad Mild Steel Cor. Tubing	PE-IIIA	**30.23** 1.190	.234	50	22.2	−40 +80	44 KW Peak	—
268	**4.09** BC .1610	PE Helix	**8.89** .350	Corrugated BC Tube	None	**12.65** .498	.430	50	23.0	−55 +80	10 KW Peak	—
269	ID-**7.29** .2870 OD-**9.09** BC .3580 Tube	PE Helix	**20.19** .795	Corrugated BC Tube	None	**23.53** 1.005	.430	50	22.2	−55 +80	44 KW Peak	—
269A	OD-**7.29** .2870 ID-**9.09** BC .3580 Tube	PE Helix	**20.19** .795	Corrugated BC Tube	None	**23.53** 1.005	.875	50	22.2	−55 +80	44 KW Peak	—
270	ID-**14.94** .5880 OD-**17.48** BC .6880 Tube	PE Helix	**40.08** 1.578	Corrugated BC Tube	None	**46.48** 1.830	.875	50	22.3	−55 +80	145 KW Peak	—
270A	ID-**14.94** .5880 OD-**17.48** BC .6880 Tube	PE Helix	**40.08** 1.578	Corrugated BC Tube	None	**46.48** 1.830	.125	50	22.3	−55 +80	145 KW Peak	—
279	**0.64** .0250 19/**0.13** SCCS .0050	Air-space PTFE	**2.79** .110	1/SC	FG Braid-V	**3.68** .145	.200	75	19.5	−55 +250	Extra Flex. High Temp. Cable	Extra Flex. High Temp. Cable
280	**2.91** BC .1144	Taped PTFE	**8.31** .327	2/SC	FEP-IX	**11.89** .468	.400	50	25.4	−55 +200	3000	Low Loss High Frequency
281	**4.8** .1890 19/**0.96** SC .0378	Taped PTFE	**12.7** .500	2/SC	Sil./DAC-VI	**19.05** .750	.031	50	25.4	−55 +150	4000	Low Loss High Power
282	**0.64** SC .0253	Irradiated PE	**2.51** .099	2/SC	FEP	**5.08** .200	.145	54.5	28.2	−40 +150	4500	—
283	**1.49** .0585 19/**0.3** SC .0117	Rubber-D	**7.31** .288	2/SC	Sil.	**12.07** .475	.410	46	50.0	−55 +150	8000	—
284A	**5.59** BC .220	PE Helix	**20.19** .795	Corrugated BC Tube	None	**25.53** 1.005	.430	75	15.0	−55 +80	29 KW	—
285A	**2.9** BC .1140	PTFE Helix	**20.19** .795	Corrugated BC Tube	None	**25.53** 1.005	.720	100	13.0	−55 +200	22 KW Peak	—
286	OD-**10.92** .4300 ID-**9.14** BC .3600 Tube	PE Helix	**39.88** 1.570	Corrugated BC Tube	None	**46.48** 1.830	.750	75	15.1	−55 +80	100 KW Peak	—
287	**5** BC .1970	PE Helix	**39.88** 1.570	Corrugated BC Tube	None	**46.48** 1.830	3.000	100	13.5	−55 +80	73 KW Peak	—
288	OD-**8.46** .3330 ID-**5.64** BC .2221 Tube	PE Helix	**75.18** 2.960	**95.25** CCS 3.750	None	**95.25** 3.750	3.000	50	21.6	−40 +80	440 KW Peak	—
289	OD-**20.83** .8200 ID-**18.8** CCS .7400 Tube	PE Helix	**75.18** 2.960	**95.25** CCS 3.750	None	**95.25** 3.750	1.040	75	14.7	−40 +80	290 KW Peak	—
292	**10.92** BC Tube .4300	PE Helix	**39.88** 1.570	**46.48** [1.8300] Corr. BC Tube	PE and Flooding Comp.	**50.8** 2.000	.160	75	15.1	−55 +80	100 KW Peak	—
293	**2.69** BC .106	PE	**9.53** .375	1/SC	PE-IIIA	**13.84** .545	.160	50	30.8	−55 +80	7000	Use RG 293A

Catalog 1307191
Revised 3-07

www.tycoelectronics.com

Dimensions are in millimeters and inches unless otherwise specified. Values in brackets are standard equivalents.

Dimensions are shown for reference purposes only. Specifications subject to change.

USA: 1-800-522-6752
Canada: 1-905-470-4425
Mexico: 01-800-733-8926
C. America: 52-55-1106-0803

South America: 55-11-2103-6000
Hong Kong: 852-2735-1628
Japan: 81-44-844-8013
UK: 44-8706-080-208

Appendix D - Typical Coaxial Cable Specifications (Continued)

RG/U Type Cable	Inner Conductor	Dielectric Material	DOD	Number/Type of Shielding Braids	Jacket Material	O.D.	Weight (lb/ft)	Nom. Imped. (Ohms)	Nom. Cap pf/ft	Max. Operating Temp. (C°)	Max. Operating Voltage (Volts RMS)	Comments
293A	**2.69** BC .106	PE	**9.4** .370	1/SC	PE-IIIA	**13.84** .545	.205	50	30.8	−55 +80	7000	Watertight RG 217
294	2 Cond. **2.05** .0808 1 BC, 1 TC	PE	**11.99** .472	1/TC	PE-IIIA	**16** .630	.205	95	16.3	−55 +80	3000	Use RG 294A
294A	2 Cond. **2.05** .0808 1 BC, 1 TC	PE	**11.99** .472	1/SC	PE-IIIA	**16** .630	.420	95	16.3	−55 +80	3000	Watertight RG 130
295	**4.95** BC .1950	PE	**17.27** .680	1/SC	PE-IIIA	**22.73** .895	—	50	30.8	−55 +80	11,000	Watertight RG 218
296	**5.97** .2352 37/**0.85** SC .0336	Silicone Rubber	**23.01** .906	1/SC	Neoprene	**30.23** 1.190	—	50	36.4	−55 +80	13,800	—
297	OD-**9.02** .3550 ID-**7.29** BC .2870 Tube	PFTE Helix	**20.19** .795	Corrugated BC Tube	None	**25.53** 1.005	.090	50	21.4	−55 +200	44 KW Peak	—
298	**15.32** .6030 7/**0.51** CCS .0201	PE	**2.92** .115	None	Foam PE	**16.51** .650	.056	—	—	−55 +80	—	Buoyant Per MIL-C-22667
301	**1.55** .0609 7/**0.52** HR .0203	PTFE	**4.7** .185	1/HR	FEP-IX	**6.23** .245	.031	50	29.4	−55 +200	3000	FEP Jacketed RG 126
302	**0.64** SCCS .0250	PTFE	**3.71** .146	1/SC	FEP-IX	**5.11** .201	.030	75	19.5	−55 +200	2300	FEP Jacketed RG 140
303	**0.99** SCCS .0390	PTFE	**2.95** .116	1/SC	FEP-IX	**4.32** .170	.088	50	29.4	−55 +200	1900	FEP Jacketed RG 141A
304	**1.5** SCCS .0590	PTFE	**4.7** .185	2/SC	FEP-IX	**7.11** .280	—	50	29.4	−55 +200	300	FEP Jacketed RG 143A
305	OD-**10.92** .4300 ID-**9.14** .3600 Tube	FEP	**39.88** 1.570	**46.48** BC Tube 1.830	PE-IIIA	**50.55** 1.990	.545	75	14.4	−55 +80	2720	—
306A	**4.39** BC .1730	Foam PE	**20.35** .801	**22.23** Al. Tube .8750	PE-IIIA	**25.78** 1.015	.070	75	16.5	−55 +80	5700	Per MIL-C-23806
307	**0.74** .0290 19/**0.15** SC .0058	Foam PE	**3.71** .146	2/SC PUR Interlayer	PE-IIIA	**6.86** .270	.070	75	16.7	−55 +80	1000	Triax Use to 100 MHz
307A	**0.74** .0290 19/**0.15** SC .0058	Foam PE	**3.71** .146	2/SC PUR Interlayer	PE-IIIA	**6.86** .270	.060	75	16.7	−55 +80	1000	Triax Use to 100 MHz
316	**0.51** .0201 7/**0.17** SCCS .0067	PTFE	**1.52** .060	1/SC	FEDP-IX	**2.59** .102	.012	50	29.4	−55 +200	1200	FEP Jacketed RG 188A
317	2 Cond. **2.21** .0870 7/**0.74** BC .0290	FEP	**11.33** .446	1/TC	Neoprene	**18.03** .710	—	95	15.4	−55 +80	10,000	Water Blocked
318	OD-**9.09** BC .3580 Tube ID-**7.29** .2870	PE Helix	**20.19** .795	**25.53** 1.005 Corr. BC Tube	PE-IIIA	**28.58** 1.125	.530	50	22.0	−55 +80	44 KW Peak	—
319	OD-**17.48** BC .6880 Tube ID-**14.94** .5580	PE Helix	**39.88** 1.570	**46.48** 1.830 Corr. BC Tube	PE-IIIA	**50.8** 2.000	1.040	50	22.0	−55 +80	145 KW Peak	—
321	OD-**28.96** 1.1400 Corr. BC Tube	PE Helix	—	**79.39** 2.850 Corr. BC Tube	None	**72.39** 2.850	1.210	50	21.7	−55 +80	320 KW Peak	—
322	OD-**28.96** 1.1400 Corr. BC Tube	PE Helix	—	**79.39** 2.850 Corr. BC Tube	PE & Flood Comp.	**77.22** 3.040	1.780	50	21.7	−55 +80	320 KW Peak	—

Catalog 1307191
Revised 3-07

www.tycoelectronics.com

Dimensions are in millimeters and inches unless otherwise specified. Values in brackets are standard equivalents.

Dimensions are shown for reference purposes only. Specifications subject to change.

USA: 1-800-522-6752
Canada: 1-905-470-4425
Mexico: 01-800-733-8926
C. America: 52-55-1106-0803

South America: 55-11-2103-6000
Hong Kong: 852-2735-1628
Japan: 81-44-844-8013
UK: 44-8706-080-208

Appendix D - Typical Coaxial Cable Specifications (Continued)

RG/U Type Cable	Inner Conductor	Dielectric Material	DOD	Number/Type of Shielding Braids	Jacket Material	O.D.	Weight (lb/ft)	Nom. Imped. (Ohms)	Nom. Cap pf/ft	Max. Operating Temp. (C°)	Max. Operating Voltage (Volts RMS)	Comments
323	**7.92** BC Tube .312	Foam PE	—	**24.89** .980 Corr. BC Tube	PE & Flood Comp.	**26.92** 1.060	.420	50	25.6	−55 +80	1480	—
324	**7.92** BC Tube .312	Foam PE	—	**24.89** .980 Corr. BC Tube	None	**24.89** .980	.320	50	25.6	−55 +80	1480	—
325	**2.54** .1000 19/**0.51** SC Al. .0200	PE Spline	**6.6** .260	2/SC Strip Braids	PUR	**8.89** .350	.10	50	26.3	−55 +80	750	Low Loss
326	**5.08** .2000 19/**1.02** SC Al. .0400	PE Spline	**13.97** .550	2/SC Strip Braids	PUR	**17.7** .697	.24	50	26.3	−55 +80	1700	Low Loss
327	**8.13** .3200 19/**1.63** SC Al. .0640	PE Spline	**21.34** .840	2/SC Strip Braids	PUR	**25.65** 1.010	.55	50	26.3	−55 +80	2500	Low Loss
328	**12.32** TC Braid .4850	Rubber H.J.H.	**27.05** 1.065	3/TC, GS, TC	Neoprene	**37.08** 1.460	1.469	25	85.0	−55 +80	20,000	—
329	**1.49** .0585 19/**0.3** TC .0117	Rubber H.J.H.	**9.65** .380	3/TC, GS, TC	Neoprene	**17.78** .700	.353	50	50.0	−55 +80	15,000	—
330	SC	Foam PE	—	1/SC	—	**6.15** .242	—	50	25.0	—	—	—
331	**4.11** BC .1620	Foam PE	**11.43** .450	**12.7** Al. Tube .500	PE-IIIA	**15.24** .600	.187	50	25.0	−55 +80	2500	Jacketed 231 Solid Conductor
332	**7.11** BC .2800	Foam PE	**20.35** .801	**22.23** Al. Tube .8750	None	**22.23** .875	.466	50	25.0	−55 +80	4500	Per MIL-C-23806
333	**7.11** BC .2800	Foam PE	**20.35** .801	**22.23** Al. Tube .8750	PE-IIIA	**25.78** 1.015	.548	50	25.0	−55 +80	4500	Jacketed RG 332
334	**2.49** BC .0980	Foam PE	**11.43** .450	**12.7** Al. Tube .500	None	**12.7** .500	.109	75	17.0	−55 +80	2500	Per MIL-C-23806
335	**2.49** BC .0980	Foam PE	**11.43** .450	**12.7** Al. Tube .500	PE-IIIA	**15.88** .625	.143	75	17.0	−55 +80	2500	Jacketed RG 334
336	**4.39** BC .1730	Foam PE	**20.35** .801	**22.23** Al. Tube .8750	None	**22.23** .875	.315	75	17.0	−55 +80	4000	Per MIL-C-23806
360	**6.17** BC .2430	Foam PE	**17.17** .676	**19.05** Al. Tube .7500	PE-IIIA	**20.95** .825	.397	50	25.0	−55 +80	4000	Per MIL-C-23806
366	**4.06** .1600	Foam PE	—	**13.72** .540 Corr. BC Tube	PE-IIIA	**15.75** .620	—	50	62.6	−55 +80	4000	—
367	Corrugated BC Tube	PE Helix	—	**12.7** .5000 Corr. BC Tube	PE-IIIA	**132.08** 5.2000	4.590	50	21.7	−55 +80	830 KW Peak	—
369	**2.97** BC .1170	PE Tubes	**8.08** .318	**9.91** Al. Tube .390	PE-IIIA	**11.94** .470	.140	50	24.0	−55 +80	700	—
370	**2.97** BC .1170	PE Tubes	**8.08** .318	**9.91** Al. Tube .390	None	**9.91** .390	.100	50	24.0	−40 +80	700	—
374	**0.72** BC .0285	PE	**4.06** .160	None	Foam PE	**16.51** .650	.097	—	—	−55 +80	—	Buoyant Antennna
376	**7.92** BC Tube .3120	Foam PE	—	Corr. Al. Tube	PE-IIIA	**26.92** 1.060	.390	50	26.0	−55 +80	6000	—
377	**4.19** SC Tube .1650	PTFE Tubes	—	**13.46** Al. Tube .5300	None	**13.36** .530	.170	50	24.0	−55 +250	1000	—
378	**18.11** BC Tube .7130	PE Helix	—	**46.48** 1.830 Corr. Al. Tube	PE-IIIA	**50.8** 2.000	.620	50	22.1	−55 +80	145 KW Peak	—
383	2 Cond. **1.02** .0403 2000 lb. Break	PE	—	None	Foam PE	**16.51** .650	—	100	—	−55 +80	—	Exper. Buoyant Twisted Pair
384	**1.29** BC .0508	PE	—	1/Flat BC Braid Waterproofed	Foam PE	**16.51** .650	—	50	30.8	−55 +80	—	Buoyant Antennna 600 psig.
385	**3.89** SC .1530	Semi-Solid PTFE	**10.8** .425	**12.7** Corr. Al. .500	Optional	**16.76** .660	.178	50	25.0	−55 +250	1500	Low Loss No Press. Req.

Catalog 1307191
Revised 3-07

www.tycoelectronics.com

Dimensions are in millimeters and inches unless otherwise specified. Values in brackets are standard equivalents.

Dimensions are shown for reference purposes only. Specifications subject to change.

USA: 1-800-522-6752
Canada: 1-905-470-4425
Mexico: 01-800-733-8926
C. America: 52-55-1106-0803

South America: 55-11-2103-6000
Hong Kong: 852-2735-1628
Japan: 81-44-844-8013
UK: 44-8706-080-208

Appendix D - Typical Coaxial Cable Specifications (Continued)

RG/U Type Cable	Inner Conductor	Dielectric Material	DOD	Number/Type of Shielding Braids	Jacket Material	O.D.	Weight (lb/ft)	Nom. Imped. (Ohms)	Nom. Cap pf/ft	Max. Operating Temp. (C°)	Max. Operating Voltage (Volts RMS)	Comments
386	**1.29** CCS .0508	PE	—	None Non-hosing	Foam PE	**16.51** .650	—	—	—	−55 +80	—	Buoyant Antennna 400 lb. Break
388	CS	PE	—	**11.28** .444 Max. SC	PE-IIIA	**13.84** .545	—	50	30.8	−55 +80	—	Watertight See RG 14A
389	**6.35** BC Al. .2500	PE Spline	**16.13** .635	2/SC	PE-IIIA	**22.23** .875	.336	50	22.8	−55 +80	2000	Low Loss Replaces RG 189
391	**1.22** .048 7/**0.4** TC .0159	Cond. PE and PE	**7.24** .285	1/TC	PVC-IIA	**10.29** .405	.092	72	—	−55 +80	5000	Low Noise Cable
392	**1.22** .048 7/**0.4** TC .0159	Cond. PE and PE	**7.24** .285	1/TC	PVC-IIA w/Armor	**12.07** .475	.114	72	—	−55 +80	5000	Armored RG 391
393	**2.38** .0936 7/**0.79** SC .0312	PTFE	**7.24** .285	2/SC	FEP-IX	**9.91** .390	.165	50	29.4	−55 +200	5000	Moistureproof RG 225
397	**2.44** .096 7/**0.81** SC .032	Air-space PTFE	**6.86** .270	2/SC	FEP-IX	**8.89** .350	.125	50	28.0	−55 +200	2000	Low Loss RG 393
400	**0.98** .0385 19/**0.2** SPC .0077	PTFE	**2.95** .116	2/SC	FEP-IX	**4.95** .195	.050	50	29.3	−55 +200	1900	—
401	**1.64** SPC .0645	PTFE	**5.46** .215	**6.35** OD .250 Copper Tube	None	**6.35** .250	.081	50	29.3	−40 +125	3000	Semirigid
402	**0.91** SCCS .0360	PTFE	**3.02** .119	**3.58** OD .141 Copper Tube	None	**3.58** .141	.032	50	29.3	−40 +125	2500	Semirigid
403	**0.3** SCCS .012 7/**0.1** .004	PTFE	**0.86** .034	2/SC FEP Interlayer	FEP-IX	**2.95** .116	.0075	50	29.3	−55 +200	2500	Triaxial RG 178B
404	**0.3** SCCS .012 7/**0.1** .004	PTFE and Cond. PTFE	**0.86** .034	1/SC	FEP-IX	**1.83** .072	.0054	50	31.5 Max.	−55 +200	2000	Low Loss RG 178B
405	**0.51** SCCS .0201	PTFE	**1.68** .066	**2.18** OD .086 Copper Tube	None	**2.19** .0865	.015	50	29.4	−40 +125	1500	Semirigid

Catalog 1307191
Revised 3-07

www.tycoelectronics.com

Dimensions are in millimeters and inches unless otherwise specified. Values in brackets are standard equivalents.

Dimensions are shown for reference purposes only. Specifications subject to change.

USA: 1-800-522-6752
Canada: 1-905-470-4425
Mexico: 01-800-733-8926
C. America: 52-55-1106-0803

South America: 55-11-2103-6000
Hong Kong: 852-2735-1628
Japan: 81-44-844-8013
UK: 44-8706-080-208

Appendix E - Maximum Power Handling Capabilities for Cables

(Average Input Power in Watts)

RG/U Type Cable	Frequency in MHz								
	10	50	100	200	400	1,000	3,000	5,000	10,000
5, 5A, 5B	2,000	800	550	350	230	125	60	40	22
8, 8A, 10A, 213, 215	3,700	1,300	850	540	350	190	95	65	37
9, 9A, 9B, 214	3,700	1,300	850	540	350	190	95	65	37
11, 11A, 12, 12A, 13, 13A, 216	2,500	1,000	650	400	260	150	70	50	26
217	6,000	2,000	1,200	800	480	260	120	85	50
22, 22B	1,700	650	430	280	190	110	50	38	20
55, 55A, 55B, 223	800	310	205	137	90	53	28	20	10
58, 58B	730	280	180	125	85	50	25	17	—
58A, 58C	650	225	170	110	75	44	22	15	—
59, 59A, 59B	1,300	480	310	200	135	77	40	27	15
62, 62A, 71, 71A, 71B	1,300	480	310	200	135	77	40	27	15
62B	1,150	420	280	180	120	69	35	25	14
115, 115A, 165, 225, 393	25,000	9,500	6,300	4,300	2,800	1,700	880	620	350
108, 108A	340	145	100	70	50	30	15	—	—
122	540	205	140	90	60	35	18	12	—
140, 141, 141A, 142, 142B, 302, 303, 400, 402	9,000	3,500	2,400	1,600	1,100	650	350	245	140
143, 143A	11,500	4,600	3,200	2,100	1,450	850	460	330	190
144	25,000	9,500	6,300	4,300	2,800	1,700	880	620	350
161, 179, 179A, 179B, 187, 187A	1,600	780	570	420	310	200	110	76	41
174, 174A	170	72	50	36	25	16	—	—	—
178, 178A, 178B, 196, 196A	710	340	240	170	123	78	41	28	14
180, 180A, 180B, 195, 195A	2,500	1,100	800	570	400	250	135	93	50
188, 188A, 316	1,250	600	450	330	240	160	80	57	30
210	8,500	3,300	2,300	1,600	1,100	620	310	220	140

Note: Values above 3 GHz vary considerably depending on construction.

Conditions
Ambient: 40°C
Altitude: Sea level
Center Conductor Temperature:
80°C for polyethylene
200°C for PTFE

Catalog 1307191
Revised 3-07

www.tycoelectronics.com

Dimensions are in millimeters and inches unless otherwise specified. Values in brackets are standard equivalents.

Dimensions are shown for reference purposes only. Specifications subject to change.

USA: 1-800-522-6752
Canada: 1-905-470-4425
Mexico: 01-800-733-8926
C. America: 52-55-1106-0803

South America: 55-11-2103-6000
Hong Kong: 852-2735-1628
Japan: 81-44-844-8013
UK: 44-8706-080-208

Appendix F - Nominal Loss Characteristics for Cables

(Decibels per Hundred Feet)

RG/U Type Cable	Frequency in MHz								
	10	50	100	200	400	1,000	3,000	5,000	10,000
5, 5A, 5B	.80	1.40	2.90	4.30	6.40	11.00	22.00	30.00	52.00
8, 8A, 10A, 213, 215	.66	1.50	2.20	3.20	4.60	9.00	19.00	28.00	47.00
9, 9A, 9B, 214	.66	1.50	2.20	3.20	4.60	9.00	19.00	28.00	47.00
11, 11A, 12, 12A, 13, 13A, 216	.66	1.50	2.20	3.20	4.60	9.00	19.00	28.00	—
217	.41	1.00	1.40	2.10	3.10	5.80	13.00	19.00	31.00
22, 22B	1.20	2.80	4.20	6.30	9.50	—	—	—	—
55, 55A, 55B, 223	1.35	3.00	4.30	6.00	8.80	16.50	36.00	51.00	85.00
58, 58B	1.20	3.10	4.60	7.00	10.00	17.50	38.00	—	—
58A, 58C	1.40	3.30	4.90	7.30	11.00	20.00	41.00	—	—
59, 59A, 59B	1.10	2.30	3.30	4.70	6.70	11.50	25.50	41.00	—
62, 62A, 71, 71A, 71B	.90	1.90	2.80	3.70	5.20	8.50	18.40	29.50	—
62B	.90	2.10	3.00	4.30	6.10	10.50	23.50	36.00	—
115, 115A, 165, 225, 393	.60	1.40	2.10	3.10	4.50	7.50	14.00	21.00	35.00
108, 108A	2.30	5.20	7.50	11.00	16.00	26.20	54.00	—	—
122	1.60	4.40	6.90	11.00	16.60	29.20	57.20	89.00	—
140, 141, 141A, 142, 142B, 302, 303, 400, 402	1.20	2.70	3.90	5.50	8.00	13.00	26.00	36.00	62.00
143, 143A	.85	1.80	2.50	3.80	5.70	9.70	18.10	26.10	40.70
144	.38	1.00	1.60	2.30	3.80	7.00	15.10	—	—
161, 179, 179A, 179B, 187, 187A	5.00	7.90	9.80	12.70	15.80	25.00	43.00	62.50	135.00
174, 174A	3.80	6.50	8.90	12.00	17.50	31.00	64.30	97.00	185.00
178, 178A, 178B, 196, 196A	5.30	10.00	13.30	20.00	27.50	45.00	78.00	115.00	172.00
180, 180A, 180B, 195, 195A	3.10	4.20	5.10	7.30	10.40	16.50	36.00	49.50	89.00
188, 188A, 316	3.80	7.90	11.50	15.00	20.00	30.00	58.00	79.00	133.00
210	.23	.58	.85	1.30	1.90	3.10	6.50	9.00	15.00

Note: Values above 3 GHz vary considerably depending on construction.

Conditions
Ambient: 20°C

Catalog 1307191
Revised 3-07

www.tycoelectronics.com

Dimensions are in millimeters and inches unless otherwise specified. Values in brackets are standard equivalents.

Dimensions are shown for reference purposes only. Specifications subject to change.

USA: 1-800-522-6752
Canada: 1-905-470-4425
Mexico: 01-800-733-8926
C. America: 52-55-1106-0803

South America: 55-11-2103-6000
Hong Kong: 852-2735-1628
Japan: 81-44-844-8013
UK: 44-8706-080-208

Appendix G - Glossary of Terms

A

ambient The atmospheric conditions surrounding a given item. Normally in terms of factors which influence or modify, such as temperature, humidity, etc.

amplitude The magnitude of variation in a changing quantity from its zero value. The word requires modification - as with adjectives such as peak, maximum, rms, etc. - to designate the specific amplitude in question.

arc voltage voltage that continues to pass through a surge protector during activation of GDT(approx. 20 volts)

attenuation A reduction in power. It occurs naturally during wave travel through lines, waveguides, space or a medium such as water. It may be produced intentionally by placing an attenuator in a circuit. The amount of attenuation is generally expressed in decibels per unit of length.

B

back mounted A connector attached to the inside of a panel or box with its mounting flanges inside the equipment.

bayonet coupling A quick coupling device for plug and receptacle connectors. Pins projecting from the outside of the cylindrical receptacle engage with corresponding cam slots in the bayonet plug.

bellmouth Flared at the mouth. The rear of a properly crimped wire barrel will have a slight flare (bellmouth) to relieve the strain on the wire strands as they leave the area of high compression and take their natural “lay”. A bellmouth condition may also be present in front of the wire barrel.

black box A term used to refer to any assembly or subassembly, usually electronic, that can readily be installed or removed from a larger system.

BNC Connector A radio frequency connector covered by Military Specification. It has an impedance of 50 or 75 ohms, and is designed to operate in the 0 to 4 GHz frequency range. It features quick connect/disconnect by pin and cam bayonet coupling.

body Main or largest portion of a connector to which other portions are attached.

braid A weave of metal fibers used as a shield covering for an insulated conductor or group of insulated conductors. When flattened it may be used as a grounding strap.

broad-band E Interference generated over a wide range of frequencies (e.g., automotive ignition noise).

bulkhead A term used to define a mounting style of connectors. Bulkhead connectors are designed to be inserted into a panel cutout from the rear (component side) of the panel.

C

cable Either a standard conductor, with or without insulation and other coverings, or a combination of conductors insulated from each other.

cable assembly A completed cable and its associated hardware.

capacitance The property of an electrical conductor (dielectric in a capacitor) that permits the storage of energy as a result of electrical displacement. The basic unit of capacitance is the farad, however, measurement is more commonly in microfarads or picofarads.

cavity A metallic enclosure in some types of tubes and circuits within which resonant fields may be excited at the microwave frequency to which the cavity is tuned. Usually referred to as resonant cavity. See also: contact cavity.

characteristic impedance The ratio of voltage to current at any point along a transmission line on which there are no standing waves.

circular mil area (CMA) A unit of area equal to the area of a circle whose diameter is 1 mil (0.001 inch). Used chiefly in specifying cross-sectional areas of conductors. (See Tyco Electronics Brochure No. 4402-8, Computing Circular Mil Area for Tyco Electronics Terminals and Splices).

closed entry contact A female contact designed to prevent the entry of a pin or probing device having a cross-sectional dimension (diameter) greater than the mating pin.

coaxial cable A transmission line consisting of two conductors concentric with and insulated from each other. In its flexible form it consists of either a solid or stranded center conductor surrounded by a dielectric. A braid is then woven over the dielectric to form an outer conductor. A weatherproof plastic covering, usually vinyl, is placed on top of the braid.

connector A coupling device employed to connect conductors to one circuit with those of another circuit. Used to provide rapid connect/disconnect mating with pc boards, posts or another connector.

connector assembly Includes housing and contact plus additional components such as hardware used to hold the assembly together and/or make the assembly a functional connector.

contact An electrically conductive component designed for use in a multicircuit connector.

contact cavity A defined hole in the connector insert or housing into which the contact must fit. See also: cavity.

contact durability The number of insertion and withdrawal cycles that a connector must be capable of withstanding while remaining within the performance levels of the applicable specification.

contact engaging and separating force Force required to either engage or separate contacts. Values are generally established for maximum and minimum forces.

contact inspection hole A hole, perpendicular to the cylindrical rear portion of screw machined contacts, used to check the depth to which wire has been inserted into the barrel.

contact resistance Measurement of electrical resistance of mated contacts when assembled in a connector under typical service use. Electrical resistance is determined by measuring from the rear of the electrical area of one contact to the rear of the contact area of the mating contact (excluding both crimps) while carrying a specified test current.

contact shoulder The flanged or enlarged portion of a contact that prevents it from being over-inserted into the appropriate contact cavity. The shoulder may also contribute to proper orientation and stability with the connector housing.

contact, two-piece A contact made of two separate parts joined by swedging, brazing or other means of fastening to form a single contact. While this provides the mechanical advantages of two metals, it also has the inherent electrical disadvantage of difference in conductivity.

corona A discharge of electricity appearing as a bluish-purple glow on the surface of, and adjacent to, a conductor when the voltage gradient exceeds a certain critical value. It is caused by the ionization of surrounding air by high voltage.

crimp The final configuration of a terminal barrel after the necessary compression forces have been applied to cause a functional union between the terminal barrel and the wire.

crimp height A top to bottom measurement of the crimped barrel, using a crimp height comparator in the prescribed manner. (Refer to Tyco Electronics Instruction Sheet 7424).

crimping dies A term used to identify the shaping tools that, when moved toward each other, produce a certain desirable shape to the barrel of the terminal or contact that has been placed between them. Crimping dies are often referred to as die sets or as die inserts.

Catalog 1307191
Revised 3-07

www.tycoelectronics.com

Dimensions are in millimeters and inches unless otherwise specified. Values in brackets are standard equivalents.

Dimensions are shown for reference purposes only. Specifications subject to change.

USA: 1-800-522-6752
Canada: 1-905-470-4425
Mexico: 01-800-733-8926
C. America: 52-55-1106-0803

South America: 55-11-2103-6000
Hong Kong: 852-2735-1628
Japan: 81-44-844-8013
UK: 44-8706-080-208

Appendix G - Glossary of Terms (Continued)

crimping head Tooling containing jaws and linkage for use in pneumatic or hydraulic powered units to crimp loose-piece contacts/terminals that may be too large for hand tool applications.

crimping tool A term commonly used to identify a hand held mechanical device that is used to crimp a contact, terminal or splice.

crosstalk A magnetic or electrostatic coupling which causes the unwanted transfer of energy from one circuit (disturbing circuit) to another circuit (disturbed circuit)

current rating The maximum continuous electrical flow of current recommended for a given situation. It is expressed in amperes.

cycle One complete sequence of values of an alternating quantity, including a rise to maximum in one direction and return to zero; a rise to maximum in the opposite direction and return to zero. The number of cycles occurring in one second is called the frequency.

D

daisy chain A cable assembly with common wires jumpering three or more connections/connectors. The term is also used as a verb, implying to connect in jumper manner.

dB Abbreviation—see decibel.

D.C. sparkover voltage defined as the maximum voltage across a device before it discharges the energy to ground when subjected to a slowly rising voltage ramp. A rate of rise of 100V/s is usually chosen for testing purposes.

decibel A unit expressing the ratio of two voltages, currents or powers. It is equal to 20 times the common logarithm of the ratio of two voltages across or two currents through equal loads, or 10 times the common logarithm of the two powers. One decibel is approximately the smallest change in audible power that can be recognized by the human ear.

die closure Term used to designate a crimping area (crimping chamber) when the dies are fully closed or bottomed. Die closure is checked with go/no go plug gage to insure that the crimp produced by the tooling satisfies the crimp height specification.

dielectric A material that serves as an insulator. The amount of resistance to voltage in a given insulation.

dielectric withstanding voltage The maximum potential gradient that a dielectric material can withstand without failure.

discontinuity Rated interconnection: a broken connection (open circuit) or the loss of a specified connection characteristic. Transient phenomena: Short term (temporary) interruption or unacceptable variation in current or voltage.

dissipation Unusable or lost energy, such as the production of unused heat in a circuit.

distortion An unwanted change or addition to a signal or waveform when it is amplified. This definition excludes noise which is an extraneous signal superimposed on the desired signal.

dummy load A dissipative device used at the end of a transmission line or waveguide to convert transmitted energy into heat, so essentially no energy is radiated outward or reflected back to its source.

dust cap A device attached to a connector to provide protection against dust and foreign debris.

E

electromagnetic compatibility (EMC) The ability of an electronic device to operate in its intended environment without its performance being affected by EMI and without generating EMI that will affect other equipment.

electromagnetic interference (EMI) Unwanted electrical or electromagnetic energy that causes undesirable responses, degrading performance or complete malfunctions in electronic equipment. See also: noise.

electromotive force (emf) See voltage.

environmentally sealed A unit is provided with gaskets, seals, grommets, potting or other means to keep out moisture, dust, air or dirt which might reduce or impair its performance.

F

feedthrough A connector or terminal block, usually having double-ended terminals, which permits distribution and bussing of electrical circuits. Also used to describe a bushing in a wall or bulkhead, separating compartments at different pressure levels, with terminations on both sides.

ferrule A short tube used to make solderless connections to shielded or coaxial cable. Also molded into the plastic inserts of multiple contact connectors to provide strong, wear-resistant shoulders on which contact retaining springs can bear.

flange A projection extending from or around the periphery of a connector and having holes that provide for mounting the connector to a panel or to a mating connector.

frequency modulation (fm) A scheme for modulating a carrier frequency in which the amplitude remains constant but the carrier frequency is displaced in frequency proportionally to the amplitude of the modulating signal. An fm broadcast is practically immune to atmospheric and man-made interference.

fretting corrosion A form of excellerated oxidation that appears at the interface of contacting materials undergoing slight cyclic relative motion. All non-nobel metals (tin) are susceptible to some degree of fretting corrosion and will suffer contact resistance increases.

front mounted A connector is said to be front mounted when it is attached to the outside of the mating side of a panel. A front mounted connector can only be installed or removed from the outside of the equipment.

G

gas discharge tube (GDT) hermetically sealed device containing an inert gas.

GHz See gigahertz.

giga A prefix meaning one billion (10^9).

gigahertz (GHz) One billion cycles per second (10^9 cps).

glow mode condition in which the GDT continues to conduct after an impulse passed. Characterized by a visible glow in the device caused by over-heating.

ground A connection, intentional or accidental, between an electrical circuit and the earth or some conducting body (e.g. chassis) serving in place of earth.

H

heat-shrinkable A type of plastic material that has been cross-linked. A term describing tubes, sleeves, caps, boots, films or other forms of plastic which shrink to encapsulate, protect or insulate connections, splices, terminations and other configurations.

hermetic Airtight, impervious to external influence, as in a hermetic package. Often used to describe metal-to-metal solder or weld-sealed packages.

Catalog 1307191
Revised 3-07

www.tycoelectronics.com

Dimensions are in millimeters and inches unless otherwise specified. Values in brackets are standard equivalents.

Dimensions are shown for reference purposes only. Specifications subject to change.

USA: 1-800-522-6752
Canada: 1-905-470-4425
Mexico: 01-800-733-8926
C. America: 52-55-1106-0803

South America: 55-11-2103-6000
Hong Kong: 852-2735-1628
Japan: 81-44-844-8013
UK: 44-8706-080-208

Appendix G - Glossary of Terms (Continued)

hermetic seal Hermetically sealed connectors are usually multiple contact connectors where the contacts are bonded to the connector by glass or other materials and permits maximum leakage rate of gas through the connector of 1.0 micron ft./hr. at one atmosphere pressure for special applications.

hertz (Hz) International standard term for cycles per second. Named after the German physicist Heinrich R. Hertz (e.g., 60 cycles per second is equal to 60 hertz or 60 Hz).

I

impedance (Z) The total opposition offered by a component or circuit to the flow of alternating or varying current. Impedance is expressed in ohms and is similar to the actual resistance in a direct current circuit. In computations, impedance is handled as a complex ratio of voltage to current.

impedance match A condition in which the impedance of a component or circuit is equal to the internal impedance of the source, or the surge impedance of a transmission line. This gives maximum transfer of energy from the source to the load, as well as minimum reflection and distortion.

impulse discharge current is defined as the peak current of an impulse which the device can withstand ten times (5 of each polarity at fixed time intervals) without substantially affecting device performance. The test normally used to determine this capacity uses the 8/20ms waveform as depicted below where T1=8ms and T2=20ms.

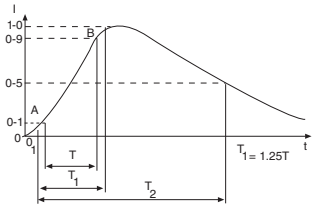

impulse sparkover voltage defined as the maximum level of voltage across a device before it discharges the energy to ground when subjected to a voltage impulse. The three common waveform profiles used to determine this capacity are:

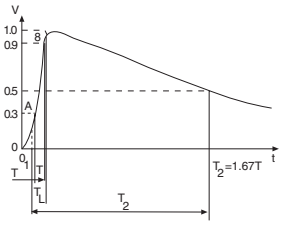

inductance One cause of reactance. An electromagnetic phenomenon in which the expanding and collapsing of a magnetic field surrounding a conductor or device tends to impede changes in current. The effects of inductance become greater as frequencies increase. The basic unit for inductance is the henry.

input impedance The impedance that exists between the input terminals of an amplifier or transmission line when the source is disconnected. The circuit, signal level and frequency must be specified.

insertion loss The loss in load power due to the insertion of a component, connector or device at some point in a transmission system. Generally expressed in decibels as the ratio of the power received at the load before insertion of the apparatus, to the power received at the load after insertion.

insulation crimp The area of a terminal splice or contact that has been formed around the insulation of a wire.

insulation grip The ability of certain crimped terminals to hold firmly in place both the conductor and a small portion of insulation. This prevents the conductor from being exposed due to insulation receding away from the terminal.

insulation resistance The electrical resistance between two conductors separated by an insulating material.

interface The two surfaces of a multiple-contact connector that face each other when the connector is assembled.

interference An electrical or electromagnetic disturbance that causes undesirable response in electronic equipment.

J

jack A connecting device into which a plug can be inserted to make circuit connections. The jack may also have contacts which open or close to perform switching functions when the plug is inserted or removed. See also: receptacle.

L

line impedance Impedance as measured across the terminals of a transmission line; frequently the characteristic impedance of the line.

M

matched impedance The coupling of two circuits in such a way that the impedance of one circuit equals the impedance of the other.

mate Two join two connectors in a normal engaging mode.

maximum discharge current defined as the peak current of an impulse which the device can withstand once without substantially affecting device performance.

mega (M) A prefix meaning one million (10^6).

microwave That portion of the electromagnetic spectrum lying between the far infrared and conventional radio frequency range. The microwave frequency range extends from 1 GHz to 300 GHz. Microwaves are usually used in point-to-point communications because they are easily concentrated into a beam.

Military Specification Military requirements. The demand imposed upon a system to meet a military operational need.

mismatch The condition in which the impedance of a source does not match or equal the impedance of the connected load. This reduces power transfer by causing reflection.

N

narrow-band EMI generated from a device operating at a specific and limited range of frequencies. See also: electromagnetic interference (EMI).

N Connector A large radio frequency connector covered by Military Specification. It has an impedance of 50 ohms and is designed to operate in the 0 to 11 GHz frequency range. It has a threaded coupling and is physically larger than a TNC connector.

noise An extraneous signal in an electrical circuit, capable of interfering with the desired signal. Classes of noise include burst of popcorn noise, intermediate frequency noise at low audio frequencies, white (thermal) noise, etc. Signals from power supply or ground line coupled into an amplifier output may be considered noise.

O

"O" crimp An insulation support crimp for open barrel terminals and contacts. In its crimped form it resembles an "O" and conforms to the shape of the round wire insulation. "O" crimp is also used to describe the circumferential crimps used on COAXICON ferrules.

Catalog 1307191
Revised 3-07

www.tycoelectronics.com

Dimensions are in millimeters and inches unless otherwise specified. Values in brackets are standard equivalents.

Dimensions are shown for reference purposes only. Specifications subject to change.

USA: 1-800-522-6752
Canada: 1-905-470-4425
Mexico: 01-800-733-8926
C. America: 52-55-1106-0803

South America: 55-11-2103-6000
Hong Kong: 852-2735-1628
Japan: 81-44-844-8013
UK: 44-8706-080-208

Appendix G - Glossary of Terms (Continued)

ohm The unit of measurement for electrical resistance. A circuit is said to have a resistance of one ohm when an applied emf of one volt causes a current of one ampere to flow.

P

panel mount A method of fixing a connector to a board, panel or frame. The mounted connector is usually the receptacle or female connector. The plug or male connector is usually the removable portion.

pcb Abbreviation: see printed circuit board.

permeability (chemical) The passage or diffusion (or rate of passage) of a gas, vapor, liquid or solid through a barrier without physically or chemically affecting it.

permeability (magnetic) The measure of how much better a material is than air as a path for magnetic lines of force. Air is assumed to have a permeability of 1.

plug In coaxial RF connectors the plug is usually the movable portion, and is usually attached to a cable or removable assembly. Plugs mate with receptacles, jacks, outlets, etc.

printed circuit board An insulating board serving as a base for a printed circuit. When the printing process is completed, the board may include printed components, as well as printed wiring.

propagation delay Time required for an electronic digital device, or transmission network to transfer information from its input to its output.

propagation delay time The time between the application of a digital input waveform and the corresponding change in input waveform. It is measured between reference points on the waveforms. The time is generally different for positive-going and negative-going waveforms.

prototype A model suitable for use in the complete evaluation of form, design and performance.

pulse A change in the level, over a relatively short period of time, of a signal whose value is normally constant.

pulse width The length of time that the pulse voltage is at the transient level. Electronic pulse widths are usually in the millisecond (10^{-3}), microsecond (10^{-6}) or nanosecond (10^{-9}) range.

R

receptacle In coaxial RF connectors, the receptacle is usually the fixed or stationary portion that is mounted to the panel. In shell-type, multiple-contact connectors the receptacle usually contains the pin contacts and is mounted on the "cold" side of a circuit such as in a drawer or black box. Receptacles mate with plugs. See also: jack.

residual impulse defined as the voltage that will pass through the device prior to activation of the GDT.

residual voltage defined as the small amount of voltage left on the line after an impulse passes.

resonance A frequency at which captive reactance and inductive reactance are equal and therefore cancel one another's effects.

RF Abbreviation for radio frequency.

RG/U Symbol used to designate coaxial cables that are made to Government Specification (e.g., RG 58U; in this designation the "R" means radio frequency, the "G" means Government, the "58" is the number assigned to the government approval, and the "U" means it is a universal specification).

rise time The time required for a component or logic circuit to change from the quiescent to the transient state when an input is applied. (i.e. elapsed time between application of input and attainment of full output level).

rms Abbreviation for root mean square.

root mean square The effective value of an alternating current, corresponding to the direct current value that will produce the same heating effect.

S

screw machine contact A contact which is machined from solid bar stock.

semi-rigid A cable containing a flexible inner core and a relatively inflexible sheathing.

sheath The outer covering of a jacket over the insulated conductors to provide mechanical protection for the conductors. Also known as the external conduction surface of a shielded transmission line.

shield/shielding (cable) A conducting envelope, composed of metal strands, which enclose a wire, group of wires or cable so constructed that substantially every point on the surface of the underlying insulation is at ground potential or at some predetermined potential with respect to ground.

shield/shielding (circuit) The metal sleeving surrounding one or more of the conductors in a wire circuit to prevent interference, interaction or current leakage. Shielding protects a circuit against crosstalk.

shock (mechanical) (1) An abrupt impact applied to a stationary object. (2) An abrupt or nonperiodic change in position, characterized by suddenness, and by the development of substantial internal forces.

SHV Abbreviation for standard high voltage.

sine wave A wave which can be expressed as the sine of a linear function of time, space or both. A waveform, often viewed on an oscilloscope, of a pure alternating current or voltage.

skin effect The tendency of alternating currents to flow near the surface of the conductor, thus being restricted to a small part of the total cross-sectional area. This effect increases the resistance and becomes more marked as the frequency rises.

sleeve The insulated or metallic covering over the barrel of a terminal.

solder contact A contact or terminal having a cup, hollow cylinder, eyelet or hook to accept a wire for a conventional soldered termination.

standard high voltage (SHV) A quick connect/disconnect connector series employing a bayonet lock coupling and designated to operate safely up to 5000 volts AC. It is the industry standard connector specified by the National Bureau of Standards (NBS) for high voltage use by the Atomic Energy Commission (AEC).

standing-wave Distribution of current and voltage on a transmission line, resulting from two sets of waves traveling in opposite directions.

standing wave ratio The ratio between maximum and minimum current or voltage along a line. It is a measure of the mismatch between the load and the line. It is equal to 1 when the line impedance is perfectly matched to the load. (In which case the maximum and minimum are the same, as current and voltage do not vary along the line). The perfect match would be a 1 to 1 ratio.

super high frequency (shf) The Federal Communications Commission designation for the band from 3,000 to 30,000 MHz in the radio spectrum.

T

tensile The amount of axial load (longitudinal stress) required to break or pull the wire from the crimped barrel of the terminal, splice or contact.

Catalog 1307191
Revised 3-07

www.tycoelectronics.com

Dimensions are in millimeters and inches unless otherwise specified. Values in brackets are standard equivalents.

Dimensions are shown for reference purposes only. Specifications subject to change.

USA: 1-800-522-6752
Canada: 1-905-470-4425
Mexico: 01-800-733-8926
C. America: 52-55-1106-0803

South America: 55-11-2103-6000
Hong Kong: 852-2735-1628
Japan: 81-44-844-8013
UK: 44-8706-080-208

Appendix G - Glossary of Terms (Continued)

tensile strength The greatest longitudinal stress that a substance or union can bear without tearing or pulling apart. In crimped terminations, it is the greatest longitudinal stress that a terminal can bear without the wire separating from the terminal.

thermal shock The effect of heat or cold applied at such a rate that nonuniform thermal expansion or contraction occurs within a given material or combination materials. The effect can cause inserts and other insulation materials to pull away from metal parts.

time-delay A circuit that delays the transmission of an impulse for a definite and desired period of time.

TNC Connector A radio frequency connector covered by Military Specification. It has an impedance of 50 ohms and is designed to operate in a 0 to 11 GHz frequency range. Reliability is assured by a threaded coupling that can be safely wired to prevent accidental disconnect.

U

UG Symbol used to describe coaxial connectors that were made to a Government specification. This specification is now obsolete.

ultra-high frequency (uhf) A Federal Communications Commission designation for the band from 300 to 3000 MHz on the radio spectrum. In television - channels 14 to 83 or 470 to 890 MHz.

V

very high frequency (vhf) A Federal Communications Commission designation for the band from 30 to 300 MHz on the radio spectrum.

voice-frequency (vf) Any frequency within that part of the radio frequency range essential to speech transmission of a commercial quality (i.e., 300 to 3400 Hz). Also referred to as telephone frequency.

volt (V) The unit of measurement for electromotive force (emf). It is equivalent to the force required to produce 1 ampere through a resistance of 1 ohm.

voltage (E) The term most often used to designate electrical pressure that exists between two points and is capable of producing a flow of current when a closed circuit is connected between the two points. Voltage is measured in volts, millivolts, microvolts and kilovolts. The terms electromotive force (emf), potential, potential difference and voltage drop are often referred to as voltage.

voltage drop The voltage developed across a component or conductor by the flow of current through the resistance or impedance of that component or conductor.

voltage hold over refers to the maximum line voltage at which recovery of the GDT to its inactive state will take place within a specified period of time (normally 150ms) after an induced lightning pulse (normally 10/1000ms) has been applied.

VSWR Abbreviation for voltage standing wave ratio. Also see: standing wave ratio.

W

wavelength The distance between two points which are in phase on adjacent waves. It is the distance traveled by the wave in the same span of one cycle. Electromagnetic waves (both light and radio) have a speed in space of about 300,000,000 meters (186,000 miles) per second. Thus wavelength in meters is equal to 300,000,000 divided by frequency.

Z

Z Letter symbol used to represent impedance in ohms.

Catalog 1307191
Revised 3-07

www.tycoelectronics.com

Dimensions are in millimeters and inches unless otherwise specified. Values in brackets are standard equivalents.

Dimensions are shown for reference purposes only. Specifications subject to change.

USA: 1-800-522-6752
Canada: 1-905-470-4425
Mexico: 01-800-733-8926
C. America: 52-55-1106-0803

South America: 55-11-2103-6000
Hong Kong: 852-2735-1628
Japan: 81-44-844-8013
UK: 44-8706-080-208

RF Coaxial Solutions for Communications Equipment

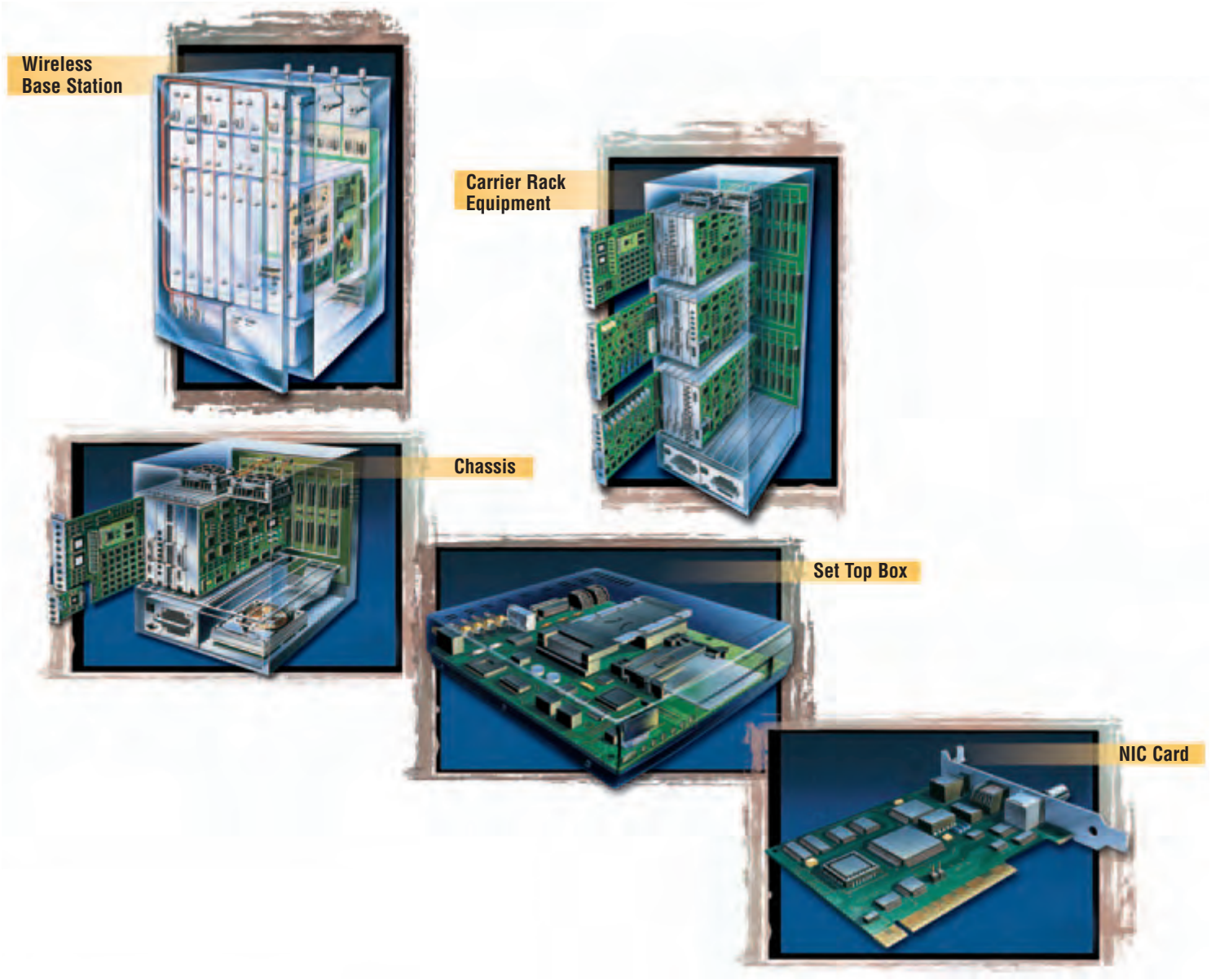

Catalog 1307191
Revised 3-07

www.tycoelectronics.com

Dimensions are in millimeters and inches unless otherwise specified. Values in brackets are standard equivalents.

Dimensions are shown for reference purposes only. Specifications subject to change.

USA: 1-800-522-6752
Canada: 1-905-470-4425
Mexico: 01-800-733-8926
C. America: 52-55-1106-0803

South America: 55-11-2103-6000
Hong Kong: 852-2735-1628
Japan: 81-44-844-8013
UK: 44-8706-080-208

Wireless Base Station

Radio base station cabinets demand packaging that combines high power r.f. signals, high speed digital data, and analog signals. Cabinet input/output connections are provided by N Series and 7/16 connectors. Plug-in r.f. modules require Blindmate, DIN inserts, and panel mount connectors. Transceiver modules utilize MCX, and SSMT board and cable connectors for board to board and panel to board applications. Finally, both semi-rigid and flexible RG cable assemblies route signals throughout the entire cabinet.

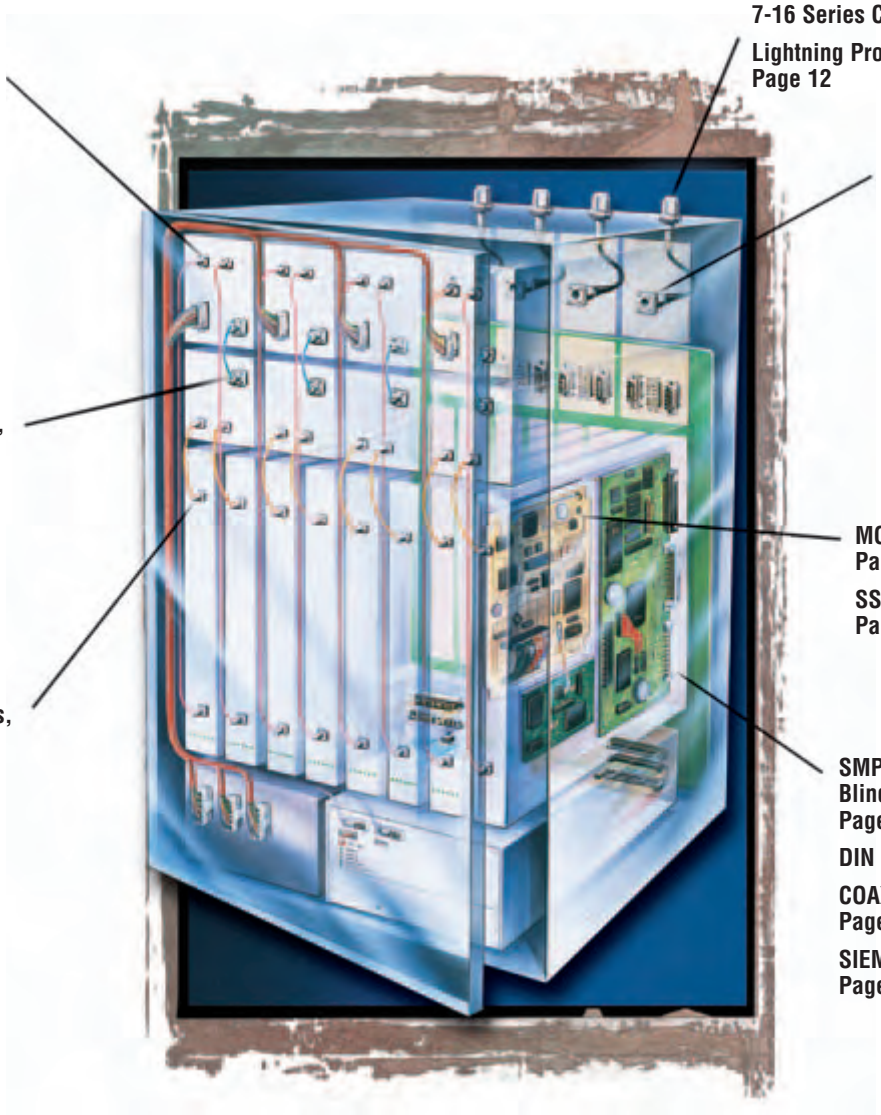

SMA Connectors Page 100

SMB Connectors Page 176

7-16 Series Connectors, Page 7

Lightning Protection Connectors, Page 12

7-16 Series Cable Assemblies, Page 269

N Series Cable Assemblies, Page 269

N Series Connectors, Page 20

MCX Connectors, Page 196

SSMT Connectors, Page 212

TNC Connectors, Page 29

SMP Subminiature Blindmate Connectors, Page 152

DIN Inserts, Page 238

COAXICON Contacts, Page 244

SIEMAX Connectors, Page 249

Catalog 1307191
Revised 3-07

www.tycoelectronics.com

Dimensions are in millimeters and inches unless otherwise specified. Values in brackets are standard equivalents.

Dimensions are shown for reference purposes only. Specifications subject to change.

USA: 1-800-522-6752
Canada: 1-905-470-4425
Mexico: 01-800-733-8926
C. America: 52-55-1106-0803

South America: 55-11-2103-6000
Hong Kong: 852-2735-1628
Japan: 81-44-844-8013
UK: 44-8706-080-208

Carrier Rack Equipment

For today's fast paced Carrier Equipment market, Tyco Electronics offers a broad line of RF interconnect products that meet demanding customer requirements for CATV, telecom and data transmission applications. Connectors, cable assemblies, and applicator tooling are available for applications ranging from central office to customer premise environments, 50 or 75 ohms, from rack based equipment to set top boxes. Styles range from standard miniature RF connectors such as F series, BNC and TNC to subminiature RF connectors such as SMA, SMB, SMC and Blindmate connectors, to Micro miniature MMCX, SSMT and SMT/QuickGrip products. SIEMAX connectors provide multi-positional surface mount technology RF connection for pcb and panel applications, and offer superior packaging density. Between Series adapters are available, along with connectors meeting international DIN and IEC standard interfaces. High performance GHz range BNC connectors meet the needs for faster signaling.

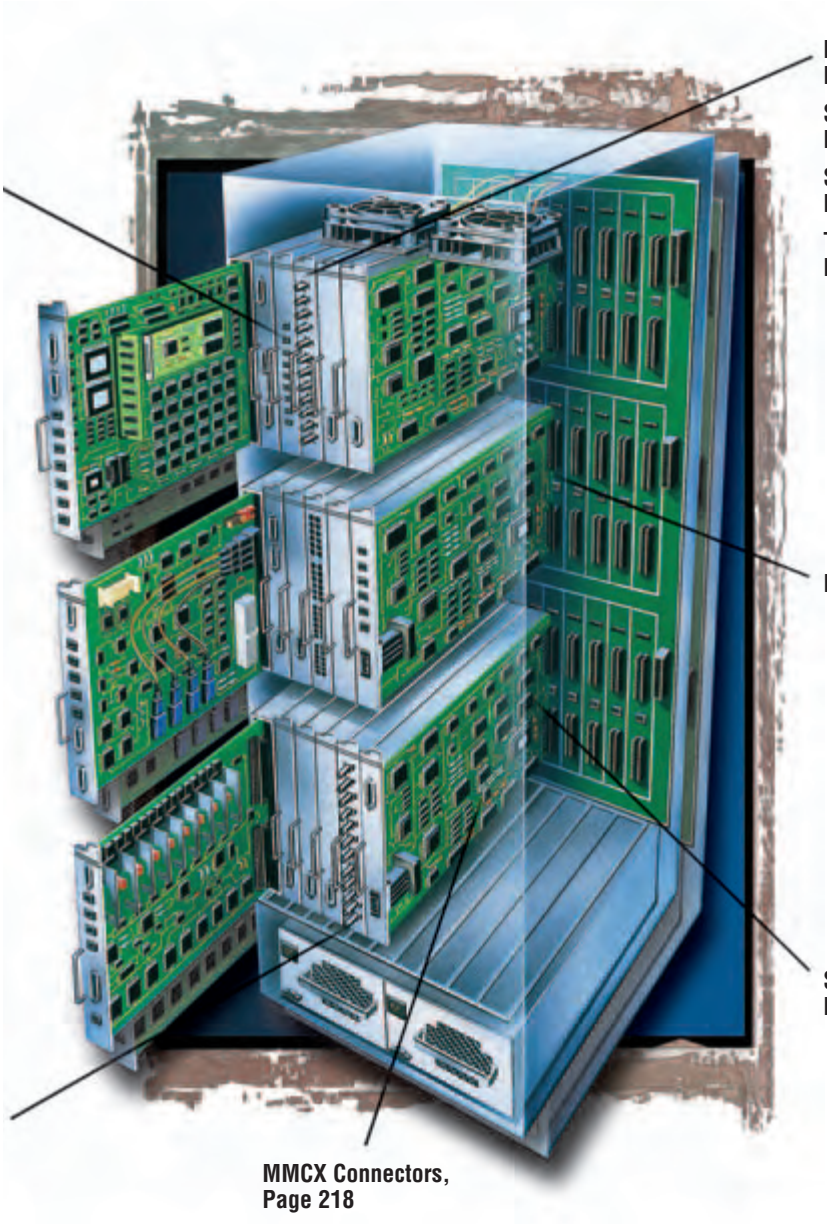

BNC Connectors, Page 44
SMA Connectors, Page 100
SMB Connectors, Page 176
TNC Connectors, Page 29
G Series Connectors, Page 98
DIN Inserts, Page 238
SIEMAX Connectors, Page 249
F Series Connectors, Page 93
MMCX Connectors, Page 218

Catalog 1307191
Revised 3-07

www.tycoelectronics.com

Dimensions are in millimeters and inches unless otherwise specified. Values in brackets are standard equivalents.

Dimensions are shown for reference purposes only. Specifications subject to change.

USA: 1-800-522-6752
Canada: 1-905-470-4425
Mexico: 01-800-733-8926
C. America: 52-55-1106-0803

South America: 55-11-2103-6000
Hong Kong: 852-2735-1628
Japan: 81-44-844-8013
UK: 44-8706-080-208

Chassis, NIC Card and Set Top Box

Coaxial interconnects have evolved in the enterprise market place over the years. The BNC interfaces that once dominated the Ethernet premise installations to coax products that provide high speed access to the carrier infrastructure.

In today's environment, Network Interface Cards (NIC) still feature Capacitively Decoupled BNC connectors with built-in chip capacitors to reduce noise and ground loop currents.

For the infrastructure, the standard coaxial interfaces to the infrastructure include both 50 and 75 ohm BNC connectors. The BNC family features numerous styles including cable plugs and jacks, adapters and printed circuit board connectors. To address manufacturability, we offer the board mount in SMT, wave solder, and press fit. More recently, the SMB interface is the one of choice for improved density and is available in both commercial and MIL-type. Again, our portfolio has a wide variety of configurations to address your system requirements.

Lastly, as broadband CATV becomes more prevalent for internet access in cable modems, our family of F connectors offer a high performance solution.

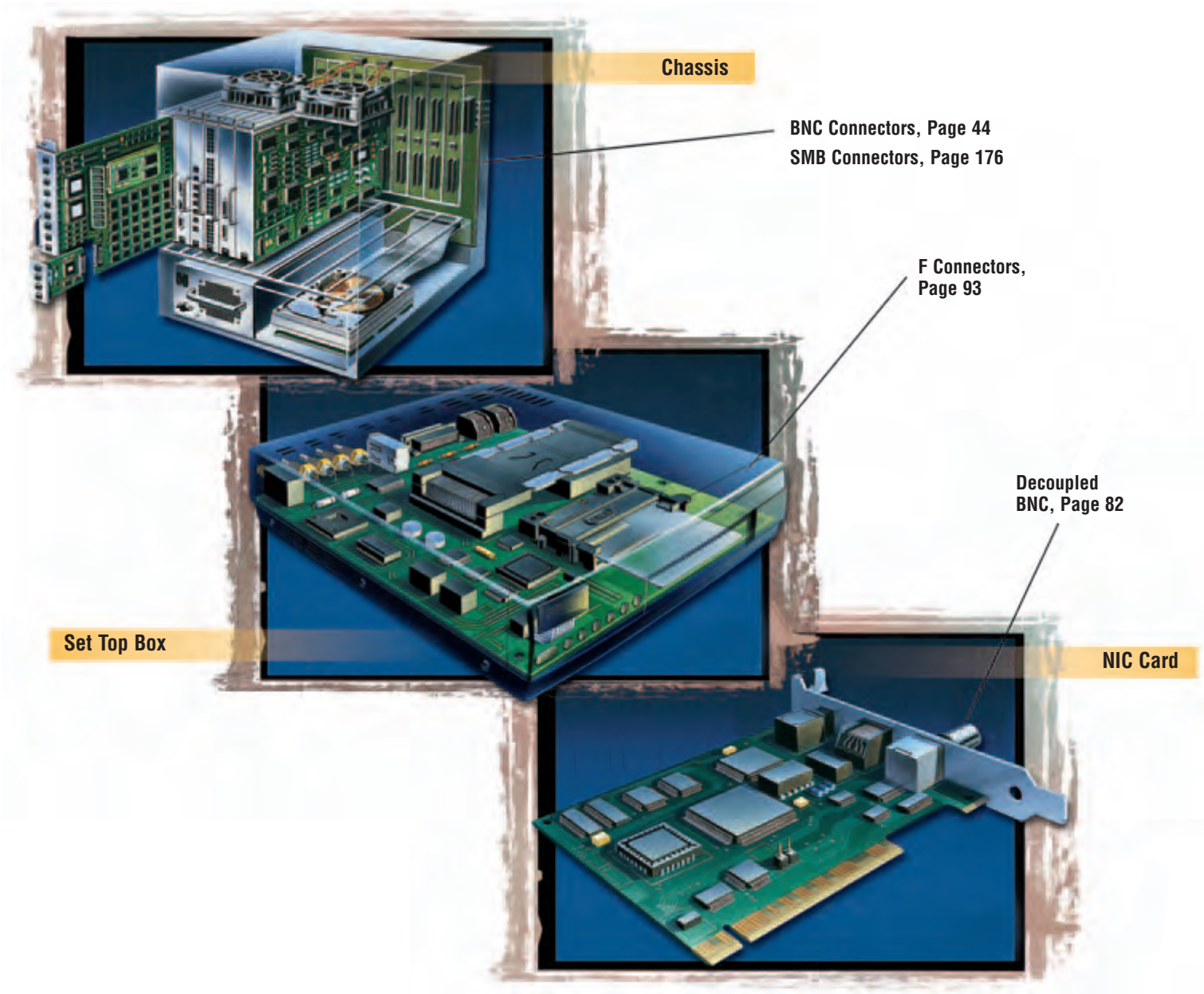

Catalog 1307191
Revised 3-07

www.tycoelectronics.com

Dimensions are in millimeters and inches unless otherwise specified. Values in brackets are standard equivalents.

Dimensions are shown for reference purposes only. Specifications subject to change.

USA: 1-800-522-6752
Canada: 1-905-470-4425
Mexico: 01-800-733-8926
C. America: 52-55-1106-0803

South America: 55-11-2103-6000
Hong Kong: 852-2735-1628
Japan: 81-44-844-8013
UK: 44-8706-080-208

Non-RoHS to RoHS Compliant Part Number Cross Reference

Non-RoHS Part No.	RoHS Compliant Part No.
13126-1	Exempt
13127-1	Exempt
59980-1	Exempt
69477-1	Exempt
69710-1	Exempt
148385-1	5148385-1
148386-1	5148386-1
189721-1	Exempt
220015-1	Exempt
220220-2	Exempt
220221-2	Exempt
220222-2	Exempt
220224-1	Exempt
221111-1	5221111-1
221123-2	5221123-2
221128-1	5221128-1
1-221128-0	1-5221128-0
1-221128-1	1-5221128-1
1-221128-7	1-5221128-7
2-221128-1	2-5221128-1
2-221128-3	2-5221128-3
2-221128-7	2-5221128-7
3-221128-1	3-5221128-1
221162-1	5221162-1
221185-1	5221185-1
221185-2	5221185-2
221185-3	5221185-3
221185-5	5221185-5
221185-7	5221185-7
221185-8	5221185-8
221185-9	5221185-9
1-221185-0	1-5221185-0
1-221185-8	1-5221185-8
2-221185-9	2-5221185-9
3-221185-1	3-5221185-1
221198-1	5221198-1
221199-1	5221199-1
221199-2	5221199-2
221199-5	5221199-5
221221-1	5221221-1
221221-2	5221221-2
221221-5	5221221-5
221221-7	5221221-7
221244-1	5221244-1
221325-1	5221325-1
221336-3	5221336-3
221336-4	5221336-4
221402-2	5221402-2
221402-4	5221402-4
221506-2	5221506-2
221506-3	5221506-3
221506-5	5221506-5
221629-1	5221629-1
221629-2	5221629-2
221629-4	5221629-4
221629-5	5221629-5
221629-6	5221629-6
1-221629-6	1-5221629-6
221980-1	5221980-1
221981-2	5221981-2
222006-1	5222006-1
222092-1	5222092-1
222092-3	5222092-3
222093-1	5222093-1
222117-1	5222117-1
222132-1	5222132-1
222165-2	5222165-2
222420-1	5222420-1
222462-1	5222462-1
222506-1	5222506-1
222506-5	5222506-5
222506-6	5222506-6
225089-4	5225089-4
225092-8	5225092-8
225349-9	5225349-9
225361-2	5225361-2
225361-4	5225361-4
1-225361-2	1-5225661-2
225363-1	5225363-1
225392-2	5225392-2
225395-1	5225395-1
225395-2	5225395-2
225395-3	5225395-3
225395-6	5225395-6
225395-7	5225395-7
225395-8	5225395-8
1-225395-0	1-5225395-0
2-225395-0	2-5225395-0
4-225395-1	4-5225395-1
4-225395-2	4-5225395-2
225396-1	5225396-1
225396-2	5225396-2
225396-7	5225396-7
225397-1	5225397-1
225397-2	5225397-2
225397-7	5225397-7
225398-1	5225398-1
225398-3	5225398-3
225398-6	5225398-6
225398-7	5225398-7
225398-8	5225398-8
1-225398-5	1-5225398-5
225554-6	5225554-6
1-225554-1	1-5225554-1
225555-2	5225555-2
225555-6	5225555-6
225555-7	5225555-7
225555-8	5225555-8
225557-6	5225557-6
225559-2	5225559-2
225559-8	5225559-8
225661-1	5225661-1
225661-2	5225661-2
1-225661-3	1-5225661-3
1-225661-6	1-5225661-6
225662-2	5225662-2
1-225662-8	1-5225662-8
225664-1	5225664-1
225664-2	5225664-2
1-225664-2	1-5225664-2
1-225667-6	1-5225667-6
225669-1	5225669-1
225669-2	5225669-2
225699-1	5225699-1
225886-1	5225886-1
225886-4	5225886-4
225886-5	5225886-5
225886-7	5225886-7
225974-1	5225974-1
225974-2	5225974-2
225974-5	5225974-5
226978-1	5226978-1
226978-3	5226978-3
226990-1	5226990-1
226990-3	5226990-3
226990-6	5226990-6
226993-1	5226993-1
226993-2	5226993-2
226993-3	5226993-3
226993-6	5226993-6
227079-5	5227079-5
227079-6	5227079-6
227079-7	5227079-7
1-227079-1	1-5227079-1
1-227079-6	1-5227079-6
1-227079-9	1-5227079-9
2-227079-2	2-5227079-2
4-227079-3	4-5227079-3
5-227079-3	5-5227079-3
6-227079-1	6-5227079-1
6-227079-7	6-5227079-7
6-227079-8	6-5227079-8
8-227079-2	8-5227079-2
1-227086-0	1-5227086-0
227161-1	5227161-1
227161-2	5227161-2
227161-3	5227161-3
227161-6	5227161-6
227161-7	5227161-7
227161-9	5227161-9
227169-5	5227169-5
227169-7	5227169-7
227169-8	5227169-8
227222-1	5227222-1
227222-2	5227222-2
227222-3	5227222-3
227222-6	5227222-6
227426-1	5227426-1
227661-1	5227661-1
227671-1	5227671-1
227673-1	5227673-1
227676-1	5227676-1
227677-1	5227677-1
227699-1	5227699-1
227699-2	5227699-2
227699-3	5227699-3
227716-3	5227716-3
227726-1	5227726-1
227726-2	5227726-2
227726-3	5227726-3
227755-1	5227755-1
227755-2	5227755-2
227755-3	5227755-3
227764-2	5227764-2
227818-1	5227818-1
227820-1	5227820-1
227839-1	5227839-1
228217-1	5228217-1
228226-1	5228226-1
228226-3	5228226-3
228435-1	5228435-1
228596-1	5228596-1
228596-2	5228596-2
228596-3	5228596-3
228596-4	5228596-4
228596-5	5228596-5
228618-1	5228618-1
228618-2	5228618-2
228618-3	5228618-3
228618-4	5228618-4
228618-5	5228618-5
228686-1	5228686-1
228979-5	5228979-5
228979-6	5228979-6
228979-7	5228979-7
228980-5	5228980-5
228980-6	5228980-6
228980-7	5228980-7
307581-1	Exempt
311386-1	Exempt
311386-2	Exempt
311386-3	Exempt
311392-1	Exempt
311395-1	Exempt
311396-1	Exempt
312067-1	Exempt
312253-1	Exempt
312253-2	Exempt
312317-1	Exempt
2-329444-1	2-5329444-1
2-329444-2	2-5329444-2
2-329445-1	2-5329445-1
2-329446-1	2-5329446-1
2-329452-2	2-5329452-2
2-329456-1	2-5329456-1
2-329458-1	2-5329458-1
329517	5329517
2-330061-1	2-5330061-1
2-330062-1	2-5330062-1
2-330063-1	2-5330063-1
2-330358-2	2-5330358-2
330876	5330876
330878	5330878
331175	5331175
331178	5331178
331182	5331182
331238	5331238
332215	5332215
332225-3	5332225-3
332225-5	5332225-5
332225-6	5332225-6
332225	5332225
332342	5332342
413194-1	5413194-1

Catalog 1307191
Revised 3-07

www.tycoelectronics.com

Dimensions are in millimeters and inches unless otherwise specified. Values in brackets are standard equivalents.

Dimensions are shown for reference purposes only. Specifications subject to change.

USA: 1-800-522-6752
Canada: 1-905-470-4425
Mexico: 01-800-733-8926
C. America: 52-55-1106-0803

South America: 55-11-2103-6000
Hong Kong: 852-2735-1628
Japan: 81-44-844-8013
UK: 44-8706-080-208

Non-RoHS to RoHS Compliant Part Number Cross Reference (Continued)

Non-RoHS Part No.	RoHS Compliant Part No.
413194-2	5413194-2
413311-1	5414311-1
413364-2	5413364-2
413366-2	5413366-2
413476-2	5413476-2
413506-1	5413506-1
413515-2	5413515-2
413515-3	5413515-3
413515-7	5413515-7
413515-8	5413515-8
413515-9	5413515-9
413524-2	5413524-2
413524-5	5413524-5
413557-1	5413557-1
413557-2	5413557-2
413558-1	5413558-1
413558-2	5413558-2
413558-3	5413558-3
413558-5	5413558-5
413588-2	5413588-2
413588-4	5413588-4
413588-8	5413588-8
413588-9	5413588-9
1-413588-0	1-5413588-0
413589-1	5413589-1
413589-2	5413589-2
413589-3	5413589-3
413589-5	5413589-5
413589-7	5413589-7
413589-8	5413589-8
413589-9	5413589-9
1-413589-0	1-5413589-0
1-413589-1	1-5413589-1
1-413589-6	1-5413589-6
413590-3	5413590-3
413590-4	5413590-4
413590-8	5413590-8
413591-1	5413591-1
413592-2	5413592-2
413592-6	5413592-6
413592-9	5413592-9
1-413592-1	1-5413592-1
413631-1	5413631-1
413631-2	5413631-2
413631-3	5413631-3
413760-1	5413760-1
413760-3	5413760-3
413760-8	5413760-8
413760-9	5413760-9
413771-1	5413771-1
413771-3	5413771-3
413779-3	5413779-3
2-413779-4	2-5413779-4
413879-1	5413879-1
413879-2	5413879-2
413933-1	5413933-1
413959-1	5413959-1
413959-3	5413959-3
413959-4	5413959-4
413959-5	5413959-5
413959-6	5413959-6
413969-2	5413969-2
413986-1	5413986-1
414088-1	5414088-1
414094-2	5414094-2
414105-1	5414105-1
414160-5	5414160-5
414168-1	5414168-1
414168-3	5414168-3
414168-4	5414168-4
414168-5	5414168-5
414168-6	5414168-6
414170-1	5414170-1
414170-2	5414170-2
414171-3	5414171-3
414173-3	5414173-3
414194-1	5414194-1
414215-1	5414215-1
414217-1	5414217-1
414265-3	5414265-3
414284-2	5414284-2
414305-1	5414305-1
414337-1	5414337-1
414338-1	5414338-1
414352-1	5414352-1
414363-3	5414363-3
414363-4	5414363-4
414363-5	5414363-5
414363-8	5414363-8
414367-2	5414367-2
414373-1	5414373-1
414394-1	5414394-1
414409-1	5414409-1
414414-1	5414414-1
414459-1	5414459-1
414460-1	5414460-1
414493-4	5414493-4
414553-1	5414553-1
414651-3	5414651-3
414666-1	5414666-1
414758-1	5414758-1
414758-2	5414758-2
414758-3	5414758-3
414907-1	5414907-1
414946-2	5414946-2
414946-3	5414946-3
414946-5	5414946-5
414946-6	5414946-6
415006-1	5415006-1
415006-2	5415006-2
415020-1	5415020-1
415024-1	5415024-1
415024-3	5415024-3
415025-1	5415025-1
415025-2	5415025-2
415046-1	5415046-1
415085-1	5415085-1
415103-1	5415103-1
415103-2	5415103-2
415105-1	5415105-1
415105-2	5415105-2
415187-1	5415187-1
415189-1	5415189-1
415205-1	5415205-1
415214-1	5415214-1
415216-1	5415216-1
415218-5	5415218-5
415226-1	5415226-1
415232-4	5415232-4
415232-7	5415232-7
415242-2	5415242-2
415242-6	5415242-6
415248-1	5415248-1
415248-7	5415248-7
415252-1	5415252-1
415252-2	5415252-2
415252-3	5415252-3
415252-4	5415252-4
415255-1	5415255-1
415255-2	5415255-2
415255-3	5415255-3
415255-4	5415255-4
415276-2	5415276-2
415302-1	5415302-1
415302-2	5415302-2
415322-2	5415322-2
415332-1	5415332-1
415379-1	5415379-1
415381-1	5415381-1
415406-2	5415406-2
415417-1	5415417-1
415419-1	5415419-1
415485-1	5415485-1
415485-2	5415485-2
415485-3	5415485-3
415487-1	5415487-1
415487-2	5415487-2
415487-3	5415487-3
415520-1	5415520-1
415569-2	5415569-2
415632-1	5415632-1
415632-2	5415632-2
415633-1	5415633-1
415634-1	5415634-2
415634-2	5415634-2
415683-1	5415683-1
415712-1	5415712-1
415779-1	5415779-1
415832-1	5415832-1
447648-3	5447648-3
448103-2	5448103-2
603995-1	Exempt
603995-2	Exempt
603995-3	Exempt
603995-5	Exempt
603995-6	Exempt
856402-1	Exempt
887000-1	5887000-1
887046-1	5887046-1
887078-1	5887078-1
887089-1	5887089-1
1055439-1	Exempt
1055440-1	Exempt
1055441-1	Exempt
1055442-1	Exempt
1055443-1	Exempt
1055444-1	Exempt
1055445-1	Exempt
1055446-1	Exempt
1055447-1	Exempt
1055448-1	Exempt
1055449-1	Exempt
1055450-1	Exempt
1055451-1	Exempt
1055454-1	Exempt
1055474-1	Exempt
1055475-1	Exempt
1055476-1	Exempt
1055477-1	Exempt
1055500-1	Exempt
1055831-1	Exempt
1055832-1	Exempt
1055833-1	Exempt
1055834-1	Exempt
1055836-1	Exempt
1055837-1	Exempt
1055838-1	Exempt
1055839-1	Exempt
1055840-1	Exempt
1055841-1	Exempt
1055842-1	Exempt
1055843-1	Exempt
1057088-1	6057088-1
1057094-1	6057094-1
1057116-1	6057116-1
1057159-1	6057159-1
1057165-1	6057165-1
1057176-1	6057176-1
1059632-1	6059632-1
1059665-1	6059665-1
1061002-1	6061002-1
1061035-1	6061035-1
1061092-1	6061092-1
1061094-1	6061094-1
1213890-1	Exempt
1274020-1	6274020-1
1274032-1	6274032-1
1274045-1	6274045-1
1274072-1	6274072-1
1274084-1	6274084-1
1274086-1	6274086-1
1274096-1	6274096-1
1274124-2	6274124-2
1274127-1	6274127-1
1274220-1	6274220-1
1274291-1	6274291-1
1274291-2	6274291-2
1274314-1	6274314-1
1274315-1	6274315-1
1274359-1	6274359-1
1274360-1	6274360-1
1274425-2	6274425-2
1274431-1	6274431-1
1274532-1	6274532-1

Catalog 1307191
Revised 3-07

www.tycoelectronics.com

Dimensions are in millimeters and inches unless otherwise specified. Values in brackets are standard equivalents.

Dimensions are shown for reference purposes only. Specifications subject to change.

USA: 1-800-522-6752
Canada: 1-905-470-4425
Mexico: 01-800-733-8926
C. America: 52-55-1106-0803

South America: 55-11-2103-6000
Hong Kong: 852-2735-1628
Japan: 81-44-844-8013
UK: 44-8706-080-208

Non-RoHS to RoHS Compliant Part Number Cross Reference (Continued)

Non-RoHS Part No.	RoHS Compliant Part No.
1311164-1	Exempt
1312079-1	6312079-1
1312113-1	6312113-1
1312121-1	6312121-1
1312123-1	6312123-1
1312124-1	6312124-1
1312137-1	1312137-1
1312138-1	6312138-1
1312139-1	6312139-1
1328873-1	6328873-1
1329818-1	6329818-1
1329819-1	1329819-1
1331959-1	6331959-1

Non-RoHS Part No.	RoHS Compliant Part No.
1361137-1	6361137-1
1361138-1	1361138-1
1361139-1	6361139-1
1362765-1	6362765-1
1363524-1	6363524-1
1363525-1	6363525-1
1363526-1	6363526-1
1363527-1	6363527-1
1393488-3	Exempt
1393488-4	Exempt
1393524-1	Exempt
1393524-4	Exempt
1393524-5	Exempt

Non-RoHS Part No.	RoHS Compliant Part No.
1-1393524-1	Exempt
2-1393524-4	Exempt
2-1393524-6	Exempt
2-1393524-7	Exempt
1393665-1	6-1393665-1
1-1393665-4	—
1-1393665-5	—
1-1393665-6	—
1-1393665-7	—
2-1393670-1	—
2-1393670-2	—
2-1393670-3	—
2-1393670-4	—

Non-RoHS Part No.	RoHS Compliant Part No.
1393696-2	6-1393696-2
1393696-7	6-1393696-7
1402314-1	1402314-1
1408026-1	6408026-1
1408027-1	6408027-1
1408028-1	6408028-1
1408030-1	6408030-1
1408032-1	6408032-1
1408033-1	6408033-1
1408036-1	6408036-1
1408037-1	6408037-1
1408038-1	6408038-1
1725637-1	Exempt

Catalog 1307191
Revised 3-07

www.tycoelectronics.com

Dimensions are in millimeters and inches unless otherwise specified. Values in brackets are standard equivalents.

Dimensions are shown for reference purposes only. Specifications subject to change.

USA: 1-800-522-6752
Canada: 1-905-470-4425
Mexico: 01-800-733-8926
C. America: 52-55-1106-0803

South America: 55-11-2103-6000
Hong Kong: 852-2735-1628
Japan: 81-44-844-8013
UK: 44-8706-080-208

M/A-COM to Tyco Electronics Part Number Cross Reference

M/A-COM Part No.	Tyco Electronics Part No.
127669-92	1311164-1
127893-98	1402314-1
2001 5003 02	1050525-1
2001 5031 02	1050542-1
2001 5032 02	1050548-1
2001 5385 02	1050598-1
2001 5395 02	1050602-1
2001 5443 02	1050611-1
2001 7188 02	1050721-1
2001 7641 02	1050740-1
2001 7941 02	1050757-1
2001 7985 02	1050770-1
2002 5015 00	1050854-1
2002 5016 00	1050859-1
2002 7188 02	1050903-1
2004 7188 02	1050996-1
2004 7641 02	1051005-1
2004 7685 02	1051007-1
2006 5010 00	1051046-1
2006 5013 00	1051052-1
2006 7941 00	1051081-1
2006 7985 00	1051085-1
2007 7188 02	1051140-1
2007 7641 02	1051145-1
2007 7685 02	1051147-1
2007 7941 02	1051151-1
2007 7985 02	1051157-1
2031 5002 00	1051638-1
2031 5003 02	1051644-1
2032 5002 00	1051852-1
2032 5003 02	1051855-1
2032 5007 00	1051861-1
2032 5021 02	1051867-1
2032 5026 02	1051869-1
2034 5008 00	1051942-1
2037 5005 02	1052063-1
2037 5006 02	1052067-1
2037 5007 02	1052072-1
2037 5008 02	1052076-1
2037 5100 02	1052098-1
2051 0000 02	1052324-1
2051 1352 02	1052349-1
2051 1618 02	1052360-1
2052 0000 02	1052422-1
2052 1200 02	1052518-1
2052 1201 00	1052522-1
2052 1201 02	1052523-1
2052 1215 02	1052528-1
2052 1300 02	1052534-1
2052 1350 02	1052544-1
2052 1352 02	1052552-1
2052 1612 02	1052563-1
2052 1658 02	1052577-1
2052 3354 02	1052628-1
2052 3356 02	1052634-1
2052 3358 02	1052643-1
2052 3359 02	1052646-1
2052 3363 02	1052652-1
2052 3500 02	1052684-1
2052 3502 02	1052689-1
2052 5636 02	1052898-1
2052 5674 02	1052902-1
2054 1201 02	1052978-1
2054 1231 02	1052982-1
2054 1241 02	1052986-1
2056 5006 02	1053092-1
2058 5029 02	1053222-1
2062 0000 00	1053354-1
2064 0000 00	1053378-1
2080 0000 00	1053488-1
2081 0000 02	1053635-1
2081 2301 00	1053646-1
2082 2249 02	1053780-1
2082 2700 00	1053788-1
2082 5133 02	1054426-1
2084 0000 02	1054869-1
2086 0000 02	1055018-1
2087 1230 02	1055047-1
2088 0000 02	1055065-1
2098 5206 54	1055439-1
2098 5207 54	1055440-1
2098 5208 54	1055441-1
2098 5209 02	1055442-1
2098 5210 02	1055443-1
2098 5211 02	1055444-1
2098 5212 02	1055445-1
2098 5213 02	1055446-1
2098 5214 02	1055447-1
2098 5215 02	1055448-1
2098 5216 54	1055449-1
2098 5217 54	1055450-1
2098 5218 02	1055451-1
2098 5221 10	1055454-1
2098 5279 10	1055474-1
2098 5281 02	1055475-1
2098 5282 02	1055476-1
2098 5283 02	1055477-1
2098 5516 02	1055500-1
2204 7941 09	1082029-1
2207 7985 09	1088312-1
2231 7388 36	1082034-1
2318 0000 54	1085456-1
2367 0000 54	1251802-1
2367 5001 54	1083946-1
2367 5002 54	1055689-1
2380 2240 00	1055694-1
2381 2241 00	1055695-1
2382 2240 00	1055696-1
2382 2241 00	1055697-1
2399 5011 54	1086008-1
2399 5012 54	1086009-1
2598 5196 54	1055831-1
2598 5197 54	1055832-1
2598 5198 54	1055833-1
2598 5199 54	1055834-1
2598 5201 54	1055836-1
2598 5202 54	1055837-1
2598 5203 54	1055838-1
2598 5204 54	1055839-1
2598 5205 54	1055840-1
2598 5206 54	1055841-1
2598 5207 54	1055842-1
2598 5208 54	1055843-1
2598 5342 54	1221286-1
2598 5438 54	1088313-1
2831 7316 02	1056436-1
2831 7341 02	1056438-1
2831 7388 02	1056443-1
2834 7316 02	1056445-1
2834 7341 02	1056447-1
2834 7358 02	1056450-1
2834 7388 02	1056452-1
2837 7316 02	1056456-1
2837 7388 02	1056462-1
2902 7947 62	1056526-1
2902 7985 62	1056527-1
2908 7947 62	1056553-1
2908 7985 62	1056554-1
2965 5006 62	1061692-1
2980 0000 62	1056700-1
2980 2240 00	1056702-1
2981 2241 00	1056706-1
2982 2240 00	1056707-1
2982 2241 00	1056708-1
2998 5001 02	1056721-1
2998 5002 02	1056722-1
2998 5003 02	1056724-1
2998 5022 94	1056728-1
2998 5028 02	1056729-1
2998 5030 02	1056731-1
2998 5035 02	1056736-1
2998 5043 02	1056743-1
2998 5044 02	1056744-1
2998 5045 02	1056745-1
2998 5054 94	1056750-1
2998 5055 94	1056751-1
2998 5056 94	1056752-1
3001 7941 00	6057088-1
3001 7985 00	6057094-1
3002 7941 00	6057116-1
3004 7941 00	6057159-1
3004 7985 00	6057165-1
3006 7941 00	6057176-1
3051 0000 10	1057275-1
3051 1200 10	1057277-1
3051 1201 10	1057279-1
3052 0000 10	1057284-1
3052 1201 10	1057290-1
3080 2240 00	1057341-1
3080 2242 00	1057343-1
3081 2241 00	1057367-1
3082 0000 00	1057374-1
3082 2240 00	1057377-1
3082 2241 00	1057381-1
3082 2243 00	1057385-1
3082 2310 00	1057387-1
3082 2311 00	1057388-1
3082 2320 00	1057390-1
3082 2321 00	1057392-1
3084 2240 00	1057463-1
3101 7941 00	1057631-1
3101 7985 00	1057635-1
3104 7941 00	1057676-1
3104 7985 00	1057679-1
3106 7941 00	1057697-1
3106 7985 00	1057699-1
3152 0000 10	1057775-1
3152 1201 10	1057780-1
3180 2242 00	1057841-1
3180 2302 00	1057843-1
3180 2320 00	1057845-1
3182 2240 00	1057853-1
3182 2243 00	1057857-1
3184 2240 00	1057908-1
3280 2224 00	1058056-1
3280 2240 00	1058058-1
3281 2223 00	1058066-1
3282 2223 00	1058077-1
3282 2240 00	1058081-1
3282 2241 00	1058083-1
3284 2240 00	1058117-1
3680 2240 00	1058651-1
3680 2242 00	1058653-1
3682 2241 00	1058664-1
3682 2242 00	1058666-1
3684 2240 00	1058675-1
4503 7685 02	1059399-1
4503 7941 00	1059402-1
4503 7985 00	1059404-1
4504 7641 02	1059408-1
4504 7941 00	1059410-1
4504 7985 00	1059412-1
4506 7641 02	1059451-1
4506 7685 02	1059452-1
4506 7941 02	1059453-1
4506 7985 02	1059456-1
4510 7941 00	1059465-1
4510 7985 00	1059467-1
4522 7941 02	1059505-1
4522 7985 02	1059506-1
4533 7388 02	1059523-1
4534 7341 02	1059525-1
4536 5014 02	1058572-1
4536 7341 02	1059540-1
4536 7388 02	1059541-1
4540 7388 02	1059551-1
4551 1201 02	1059563-1
4551 1352 02	1059566-1
4551 3357 02	1059572-1
4552 1201 02	1059594-1
4552 1352 02	1059596-1
4557 5009 02	1059617-1
4557 5119 02	6059632-1
4557 5329 02	1059637-1
4557 5368 02	1059651-1
4558 1154 02	1059654-1
4558 5009 02	1059657-1
4558 5119 02	6059665-1
4558 5329 02	1059671-1
4562 0000 00	1059681-1
4563 0000 00	1059684-1
4563 5004 00	1253111-1
4565 0000 00	1059691-1
4580 2240 02	1059707-1

Catalog 1307191
Revised 3-07

www.tycoelectronics.com

Dimensions are in millimeters and inches unless otherwise specified. Values in brackets are standard equivalents.

Dimensions are shown for reference purposes only. Specifications subject to change.

USA: 1-800-522-6752
Canada: 1-905-470-4425
Mexico: 01-800-733-8926
C. America: 52-55-1106-0803

South America: 55-11-2103-6000
Hong Kong: 852-2735-1628
Japan: 81-44-844-8013
UK: 44-8706-080-208

M/A-COM to Tyco Electronics Part Number Cross Reference (Continued)

M/A-COM Part No.	Tyco Electronics Part No.
4581 2241 02	1059711-1
4581 2700 00	1059713-1
4582 2240 02	1059716-1
4582 2241 02	1059718-1
4582 2700 00	1059720-1
4583 2240 02	1059724-1
4584 2240 02	1059729-1
4584 2242 02	1059731-1
4584 2244 02	1059733-1
4585 2240 02	1059756-1
4585 2241 02	1059758-1
4703 7985 00	1059857-1
4706 7985 02	1059868-1
4710 7985 00	1059874-1
4733 7316 02	1059884-1
4733 7388 02	1059886-1
4736 5001 02	1059887-1
4736 7316 02	1059888-1
4740 7388 00	1059889-1
4751 3355 02	1059894-1
4757 1154 02	1059901-1
4757 3204 00	1059902-1
4757 5006 02	1059903-1
4757 5014 00	1059905-1
4763 0000 00	1059919-1
5001 5015 09	1060163-1
5007 5008 09	1060183-1
5031 5007 09	1060220-1
5031 5014 09	1060221-1
5062 5003 09	1060256-1
5064 5003 09	1060259-1
5134 5016 10	1254781-1
5180 2240 00	1060487-1
5181 2241 00	1060494-1
5182 2240 00	1060498-1
5182 2241 00	1060500-1
5801 7947 09	1060772-2
5801 7985 09	1060772-1
5802 7947 09	1060774-2
5802 7985 09	1060774-1
5807 7985 09	1060787-1
5818 5002 09	1060811-2
5818 5002 10	1060811-1
5818 5003 10	1060813-1
5831 5002 10	1060869-1
5831 5003 09	1060871-1
5831 5003 10	1060872-1
5831 7316 09	1060875-2
5831 7316 10	1060875-1
5834 7388 10	1060883-1
5837 5025 10	1330723-1
5837 5030 10	1329293-1
5837 5031 09	1363301-2
5837 5031 10	1363301-1
5858 0000 09	1060959-1
5858 0000 10	1060960-1
5862 5002 09	1060984-1
5862 5002 10	1060985-1
5862 5003 09	1330126-1
5862 5003 10	1060989-1
5862 5004 09	1060995-1
5862 5004 10	1060996-1
5862 5007 13	6061002-1
5862 5018 13	1061007-1
5863 0000 09	1085221-1
5863 0000 10	1061015-1
5864 5001 09	1061022-1
5864 5001 10	1061023-1
5864 5002 09	1061026-1
5864 5002 10	1061027-1
5864 5003 09	1061029-1
5864 5003 10	1061030-1
5864 5008 13	6061035-1
5880 2240 00	1061070-1
5881 2241 00	1061071-1
5882 2240 00	1061072-1
5882 2241 00	1061073-1
5899 5004 54	6061092-1
5899 5009 54	6061094-1
7081 2301 00	1061738-1
7081 2311 00	1061739-1
7081 5008 00	1061742-1
7081 5009 00	1061744-1
7082 2242 00	1061750-1
7082 2243 00	1061751-1
7082 2300 00	1061752-1
7082 2310 00	1061753-1
7082 5004 00	1061757-1
7082 5005 00	1061758-1
9631 7179 10	1362990-1
9637 7179 10	1362991-1
9662 5000 10	1361169-1
9664 0000 10	1363106-1
9960 1100 24	1064524-1
9960 1200 24	1064530-1
9960 1305 24	1064533-1
9960 2100 24	1064535-1
9960 2200 24	1064538-1
9960 2305 24	1064540-1
9960 2510 24	1064542-1
9960 3100 24	1082845-1
9960 4100 01	1064543-1
9960 4100 02	1064544-1
9960 4100 04	1064546-1
9960 4100 07	1064549-1
9960 4100 08	1064550-1
9960 4200 01	1064552-1
9960 4200 02	1064553-1
9960 4200 04	1064555-1
9960 4200 07	1064558-1
9960 4200 08	1064559-1
9960 4305 01	1064560-1
9960 4305 02	1064561-1
9960 4305 04	1064563-1
9960 4305 07	1064566-1
9960 4305 08	1064567-1
9980 4100 01	1329174-1
9980 4100 02	1329175-1
9980 4100 04	1408050-4
9980 4100 05	1255378-4
9980 4100 07	1408051-4
9980 4100 08	1330401-4
9980 4200 01	1329174-2
9980 4200 02	1329175-2
9980 4200 04	1408050-5
9980 4200 05	1255378-5
9980 4200 07	1408051-5
9980 4200 08	1330401-5
9980 4305 01	1310432-1
9980 4305 02	1329175-3
9980 4305 04	1408050-6
9980 4305 05	1255378-6
9980 4305 07	1408051-6
9980 4305 08	1330401-6
A55P22E999X	1311206-1
A55P23E999X	1313453-1
A55X01B999X	6312079-1
A57R03G999X	1311209-1
B67A54T022X	1311097-1
B67A54T117X	1311098-1
B67A64T022X	1311099-1
B67A64T062X	1311100-1
B67A64T280X	1311696-1
B67A64T437X	1311102-1
B67A64TA25X	1313507-1
B67B42T022X	1311103-1
B67B42T437X	1311104-1
B67B44T022X	1311106-1
B67B44T062X	1311698-1
B67B44T437X	1311111-1
B67B44TA25X	1313508-1
B67E64T022X	1408041-1
B67H16T493X	1313511-1
B67H49T022X	1311115-1
B67H64T022X	1327083-1
B67H64T062X	1311117-1
B67H64T117X	1311700-1
B67H64T280X	1313883-1
B67H64T437X	1311118-1
B67H64TA25X	1313887-1
B67H66T022X	1311120-1
B67H66T062X	1311701-1
B67H66T437X	1311122-1
B67H74T463X	1314422-1
B67N08T999X	1311125-1
B67N12T999X	1314103-1
B67N25T999X	1314102-1
B67P34G999X	1313364-1
B67R53G999X	1311127-1
B67Z50T999X	6-1311703-1
C65E06G022X	1311638-1
D75A02B001X	6331959-1
D75A02B004X	6362765-1
D75B01B470X	6328873-1
D75B02B010X	6408028-1
D75B03B001X	6408030-1
D75B03B004X	6312113-1
D75B04B004X	6408027-1
D75B04B010X	6408026-1
D75B05B004X	6408038-1
D75G03B001R	6408032-1
D75G03B004R	6408033-1
D75G07B060R	6363524-1
D75G08B001R	6363525-1
D75G08B004R	6363526-1
D75G09B010R	6363527-1
D75G10B004R	6408036-1
D75R02B999X	6408037-1
D75X06B999X	6312121-1
D75X12E470X	6312123-1
D75X14B999X	6312124-1
D75X15B999X	6361137-1
N15X09E470X	1312137-1
N15X10B999X	6312138-1
N15X12E470X	6329818-1
N15X14E010X	6312139-1
N15X16E999X	1361138-1
N15X17E999X	6361139-1
N15X18E010X	1329819-1
T35E60E010X	1312569-1

Catalog 1307191
Revised 3-07

www.tycoelectronics.com

Dimensions are in millimeters and inches unless otherwise specified. Values in brackets are standard equivalents.

Dimensions are shown for reference purposes only. Specifications subject to change.

USA: 1-800-522-6752
Canada: 1-905-470-4425
Mexico: 01-800-733-8926
C. America: 52-55-1106-0803

South America: 55-11-2103-6000
Hong Kong: 852-2735-1628
Japan: 81-44-844-8013
UK: 44-8706-080-208

Part Number Index

Note: This index lists all cataloged parts by base no. only. Complete part nos. (with prefixes and/or suffixes) are shown on the page(s) indicated.

Part No.	Page
50084	246
50095	246
50105	246
50107	246
51563	247, 248
51565	248
51692	21
51751	194
201097	245
201098	245
201143	245
201144	245
201145	245
201146	245
221108	58, 72, 73
221500	41
221509	42
221539	94
221540	94
221543	63
221551	64
221586	63
221789	121
221790	121
221951	55, 56
221988	63
222163	61, 74
222428	52
225014	22
225088	248
225093	22
225094	23
225348	38
225389	22
225551	35
225668	23
225886	49
226023	247
226060	247
226537	248
227223	55, 56
227945	25
228179	33
228215	182
228216	182
228502	37
228553	179
228658	23
282938	97
329631	57, 58, 59 73, 91
329632	57, 58, 59, 73, 91
330022	65
330024	64
330620	54
332056	248
332057	248
413453	65
413985	178
413990	180
413996	181
414002	178
414026	181
414171	35
414396	43
414612	180
414766	94
414895	182
414946	178
414948	179
414963	181
414969	182
415001	182
415232	21
415327	99
415340	181
415377	185
415380	181
415381	181
415490	185
415500	184
415504	185
415523	99
415567	76
415672	181
415774	180
415796	64
619028	230, 235
619041	230
619052	235
619053	236
619061	230, 231
619062	230, 231
619068	235
619072	230, 231
619075	233
619076	235
619078	230, 235
619085	131
619106	136
619107	133
619115	115
619127	204
619133	232
619134	204
619135	204
619137	235
619196	234
619201	233
619210	236
619211	234
619213	234
619214	236
619215	127
619219	261
619220	136
619223	131
619224	131
619226	135
619228	135
619229	206
619231	233
619238	206
619271	261
887098	94
1050525	110
1050542	110
1050548	110
1050598	112
1050602	112
1050611	112
1050721	105
1050740	112
1050757	110
1050770	110
1050854	110
1050859	110
1050903	105
1050996	106
1051005	113
1051007	113
1051046	111
1051052	111
1051081	111
1051085	111
1051140	106
1051145	113
1051147	113
1051151	112
1051157	112
1051638	104
1051644	104
1051852	104
1051855	107
1051861	104
1051867	107
1051869	107
1051942	104
1052063	105
1052067	105
1052072	108
1052076	108
1052098	108
1052324	114
1052349	116
1052360	118
1052422	114
1052518	116
1052522	116
1052523	116
1052528	119
1052534	114
1052544	114
1052552	116
1052563	118
1052577	119
1052628	120
1052634	120
1052643	120
1052646	120
1052652	120
1052684	120
1052689	120
1052898	118
1052902	119
1052978	117
1052982	117
1052986	117
1053092	115
1053222	117
1053354	121
1053378	121
1053488	122
1053635	122
1053646	256
1053780	123
1053788	259
1054426	123
1054869	123
1055018	122
1055047	123
1055065	122
1055689	214
1055694	217, 255
1055695	217, 253
1055696	217, 258
1055697	217, 259
1056436	106
1056438	106
1056443	106
1056445	107
1056447	107
1056450	107
1056452	107
1056456	108
1056462	108
1056526	154
1056527	154
1056553	154
1056554	154
1056700	152, 154
1056702	255
1056706	253
1056707	258
1056708	259
1056721	152, 155
1056722	155
1056724	155
1056728	156
1056729	155
1056731	155
1056736	155
1056743	155
1056744	155
1056745	155
1056750	156
1056751	156
1056752	156
1057275	24
1057277	24
1057279	24
1057284	24
1057290	24
1057341	254

Catalog 1307191
Revised 3-07

www.tycoelectronics.com

Dimensions are in millimeters and inches unless otherwise specified. Values in brackets are standard equivalents.

Dimensions are shown for reference purposes only. Specifications subject to change.

USA: 1-800-522-6752
Canada: 1-905-470-4425
Mexico: 01-800-733-8926
C. America: 52-55-1106-0803

South America: 55-11-2103-6000
Hong Kong: 852-2735-1628
Japan: 81-44-844-8013
UK: 44-8706-080-208

Part Number Index (Continued)

Part No.	Page
1057343	254
1057367	253
1057374	25
1057377	258
1057381	257
1057385	257
1057387	258
1057388	257
1057390	257
1057392	257
1057463	254
1057631	33
1057635	33
1057676	37
1057679	37
1057697	38
1057699	38
1057775	41
1057780	41
1057841	254
1057843	254
1057845	254
1057853	258
1057857	258
1057908	255
1058056	254
1058058	254
1058066	253
1058077	257
1058081	258
1058083	257
1058117	254
1058572	163
1058651	255
1058653	255
1058664	257
1058666	259
1058675	255
1059399	162
1059402	158, 160
1059404	158, 160
1059408	162
1059410	158, 160
1059412	158, 160
1059451	162
1059452	162
1059453	160
1059456	160
1059465	161
1059467	161
1059505	161
1059506	161
1059523	163
1059525	163
1059540	163
1059541	163
1059551	163
1059563	164
1059566	164
1059572	168
1059594	164
1059596	164
1059617	165
1059637	167
1059651	165
1059654	165
1059657	165
1059671	168
1059681	166
1059684	166
1059691	166
1059707	255
1059711	253
1059713	256
1059716	259
1059718	257
1059720	257
1059724	255
1059729	255
1059731	255
1059733	255
1059756	259
1059758	257
1059857	171
1059868	171
1059874	171
1059884	172
1059886	172
1059887	172
1059888	172
1059889	172
1059894	175
1059901	173
1059902	175
1059903	173
1059905	175
1059919	174
1060163	194
1060183	195
1060220	194
1060221	194
1060256	195
1060259	195
1060487	255
1060494	253
1060498	258
1060500	258
1060772	199
1060774	199
1060787	200
1060811	198
1060813	198
1060869	198
1060871	198
1060872	198
1060875	198
1060883	199
1060959	201
1060960	201
1060984	200
1060985	200
1060989	200
1060995	200
1060996	200
1061007	201
1061015	200
1061022	201
1061023	201
1061026	201
1061027	201
1061029	201
1061030	201
1061070	254
1061071	253
1061072	258
1061073	256
1061692	156
1061738	256
1061739	256
1061742	256
1061744	256
1061750	259
1061751	256
1061752	257
1061753	258
1061757	256
1061758	258
1064524	214
1064530	214
1064533	214
1064535	215
1064538	215
1064540	215
1064542	215
1064543	216
1064544	216
1064546	216
1064549	217
1064550	217
1064552	216
1064553	216
1064555	216
1064558	217
1064559	217
1064560	216
1064561	216
1064563	216
1064566	217
1064567	217
1082029	111
1082034	106
1082845	215
1083946	214
1085221	200
1085456	209
1086008	209
1086009	209
1088312	112
1088313	209
1221286	217
1251802	214
1253111	166
1255378	211
1274007	77
1274191	239
1274192	239
1274330	181
1274449	133
1274513	145
1274520	133
1274544	134
1274563	80
1274566	80
1274568	80
1274571	81
1274572	81
1274584	81
1274594	133
1274662	28
1274663	81
1274668	57
1274684	81
1274688	27
1274689	27
1274694	109
1274714	137
1274734	27
1274735	27
1274794	237
1274795	237
1274804	27
1274805	27
1274806	27
1274807	28
1274808	28
1274935	76
1310432	210
1311097	187
1311098	187
1311099	187
1311100	187
1311101	187
1311102	187
1311103	188
1311104	188
1311106	188
1311111	188
1311115	189
1311117	190
1311118	190
1311120	189
1311122	189
1311125	190
1311127	191
1311206	254
1311209	254
1311638	194
1311696	187
1311698	188
1311700	190
1311701	189
1311703	191
1312137	18
1312569	35
1313364	191
1313453	253
1313507	187
1313508	188

Catalog 1307191
Revised 3-07

www.tycoelectronics.com

Dimensions are in millimeters and inches unless otherwise specified. Values in brackets are standard equivalents.

Dimensions are shown for reference purposes only. Specifications subject to change.

USA: 1-800-522-6752
Canada: 1-905-470-4425
Mexico: 01-800-733-8926
C. America: 52-55-1106-0803

South America: 55-11-2103-6000
Hong Kong: 852-2735-1628
Japan: 81-44-844-8013
UK: 44-8706-080-208

Part Number Index (Continued)

Part No.	Page
1313511	189
1313883	190
1313887	190
1314102	190
1314103	190
1314422	190
1327083	190
1329174	210
1329175	210
1329293	198
1329819	18
1330126	200
1330401	211
1330723	198
1361138	18
1361169	203
1362990	203
1362991	203
1363106	203
1363301	198
1392019	240
1392020	240
1393562	137, 147
1393662	241
1393665	148, 149, 150, 253, 256, 259
1393668	240
1393670	131, 132, 133, 134, 135, 136, 147, 253, 256, 259, 260
1393672	141, 142, 143
1393680	140, 142, 143, 144
1393681	140, 141, 143, 145, 146, 150
1393682	140, 141, 142, 143, 144
1393696	250
1393757	142, 145, 220
1402314	15
1407578	208
1408041	188
1408050	211
1408051	211
1408120	221
1408148	219
1408149	219
1408150	220
1408151	220
1408152	221
1408312	219
1408313	219
1408314	219
1408332	127
1408333	126
1408336	126
1408337	127
1408338	126
1408339	126
1408340	128
1408341	128
1408342	128
1408343	128, 260
1408346	125
1408347	125
1408348	125
1408349	125
1408393	128, 253
1408496	220
1408541	109
1442004	206
1460010	131
1460052	10
1460055	25
1460060	134
1460118	25
1460128	144
1460132	141
1460139	134
1460159	9
1460169	144
1460468	115
1460469	115
1460470	195
1460802	261
1460803	261
1460815	135
1460817	135
1460821	147, 148
1460823	146
1484546	174
1566230	224
1658260	204
1750107	225
1750108	225
1750109	225
1750110	226
1775146	224
1775227	227, 260
1775228	227, 260
1775229	227, 259
1775230	227, 259
5148385	239
5148386	239
5221111	180
5221123	60
5221128	47, 48, 49, 55
5221162	243
5221185	66
5221198	91
5221199	69
5221221	70
5221244	71
5221325	41
5221336	75
5221402	68
5221506	42
5221629	65
5221980	242
5221981	242
5222006	61
5222092	72
5222093	72
5222117	76
5222132	73
5222165	64
5222420	60
5222462	74
5222506	32
5225089	24
5225092	21
5225349	34
5225361	21
5225363	23
5225392	21
5225395	47, 48, 49
5225396	51
5225397	52
5225398	53, 54
5225554	34
5225555	32
5225557	36
5225559	34
5225661	21
5225662	21
5225664	22
5225667	23
5225669	22
5225699	21
5225886	49
5225974	50
5226978	59
5226990	57
5226993	58
5227079	47, 48, 49
5227086	21
5227161	57
5227169	55
5227222	58
5227426	56
5227661	57
5227671	58
5227673	58
5227676	57
5227677	57
5227699	60
5227715	55
5227716	55
5227726	56
5227754	55
5227755	55
5227764	40
5227818	39
5227820	39
5227839	39
5228217	179
5228226	64
5228435	181
5228596	242
5228618	242
5228686	91
5228979	51
5228980	53, 54
5329444	48
5329445	49
5329446	47
5329452	51
5329456	54
5329458	53
5329517	64
5330061	47
5330062	51
5330063	53
5330358	48
5330876	47
5330878	49
5331175	50
5331178	50
5331182	50
5331238	36
5332215	92
5332225	90
5332342	90
5413194	72
5413364	65
5413366	63
5413476	85
5413506	43
5413515	85
5413524	85
5413557	65
5413558	75
5413588	68
5413589	66, 67
5413590	67, 70
5413591	42
5413592	63
5413631	62
5413760	69
5413771	53, 54
5413779	51
5413879	57
5413933	40
5413959	50
5413969	60
5413986	74
5414088	74
5414094	85
5414105	64
5414160	21
5414168	36
5414170	179
5414171	35
5414173	34
5414194	56
5414215	85
5414217	71
5414265	50
5414284	85
5414305	60
5414311	63
5414337	181
5414338	181
5414352	85
5414363	178
5414367	88
5414373	62
5414394	74
5414409	72
5414414	64

Catalog 1307191
Revised 3-07

www.tycoelectronics.com

Dimensions are in millimeters and inches unless otherwise specified. Values in brackets are standard equivalents.

Dimensions are shown for reference purposes only. Specifications subject to change.

USA: 1-800-522-6752
Canada: 1-905-470-4425
Mexico: 01-800-733-8926
C. America: 52-55-1106-0803

South America: 55-11-2103-6000
Hong Kong: 852-2735-1628
Japan: 81-44-844-8013
UK: 44-8706-080-208

Part Number Index (Continued)

Part No.	Page
5414459	72
5414460	60
5414493	87
5414553	87
5414651	86
5414666	64
5414758	87
5414907	72
5414946	178
5415006	179
5415020	76
5415024	96
5415025	62
5415046	57
5415085	86
5415103	85
5415105	72
5415187	71
5415189	60
5415205	86
5415214	96
5415216	86
5415218	57
5415226	94
5415232	21
5415242	22
5415248	23
5415252	24
5415255	22
5415276	96
5415302	95
5415322	97
5415332	98
5415379	181
5415406	98
5415417	72
5415419	72
5415484	184
5415487	184
5415520	73
5415569	95
5415632	73
5415633	72
5415634	72
5415683	98
5415712	95
5415779	87
5415832	92
5447648	107
5448103	107
5887000	98
5887046	97
5887078	95
5887089	97
6057088	21
6057094	21
6057116	22
6057159	23
6057165	23
6057176	23
6059632	167
6059665	167
6061002	202
6061035	202
6061092	202
6061094	202
6274020	97
6274032	98
6274045	98
6274072	72
6274084	72
6274086	71
6274096	121
6274124	75
6274127	75
6274291	74
6274314	61
6274315	61
6274359	74
6274360	74
6274425	76
6274431	133
6274532	21
6311225	10
6312079	14
6312113	9
6312121	15
6312123	19
6312124	19
6312138	15
6312139	19
6328873	10
6329818	17
6331959	9
6361137	17
6361139	19
6362765	9
6363524	11
6363525	11
6363526	11
6363527	11
6408026	10
6408027	10
6408028	9
6408030	9
6408032	10
6408033	10
6408036	11
6408037	11
6408038	10
6408399	18

Tooling Part Number Index

Part No.	Page
13126	268
13127	268
21027	268
58318	268
58433	266
58483	192
58489	192
59980	267, 268
59981	268
69477	266
69710	266
189721	266
220015	266
220220	268
220221	268
220222	268
220224	268
220241	268
307581	268
308075	268
311386	268
311392	268
311395	268
311396	268
312067	268
312253	268
312317	268
354500	267
603995	267
856402	266
1055420	263
1055439	262, 263
1055440	262, 263
1055441	262, 263
1055442	263
1055443	263
1055444	263
1055445	263
1055446	263
1055447	263
1055448	263
1055449	263
1055450	263
1055451	263
1055454	263
1055469	262
1055474	262
1055475	262
1055476	262
1055477	262
1055500	263
1055831	263
1055832	263
1055833	263
1055834	263
1055835	263
1055836	263
1055837	263
1055838	263
1055839	263
1055840	263
1055841	263
1055842	263
1055843	263
1213890	266
1311164	191
1393488	265
1393494	265
1393524	264 , 265
1725837	266
1775231	227
M22520/36-01	268
M22520/36-02	268
M22520/36-03	268
M22520/36-04	268
M22520/36-05	268
M22520/36-06	268
M22520/36-07	268
M22520/36-08	268
M22520/36-09	268
M22520/36-10	268
M22520/36-11	268
M22520/36-12	268
M22520/36-13	268
MIL-C-22520/2-01	192
MIL-C-22520/5-01	192

Catalog 1307191
Revised 3-07

www.tycoelectronics.com

Dimensions are in millimeters and inches unless otherwise specified. Values in brackets are standard equivalents.

Dimensions are shown for reference purposes only. Specifications subject to change.

USA: 1-800-522-6752
Canada: 1-905-470-4425
Mexico: 01-800-733-8926
C. America: 52-55-1106-0803

South America: 55-11-2103-6000
Hong Kong: 852-2735-1628
Japan: 81-44-844-8013
UK: 44-8706-080-208

Tyco Electronics

Global Contacts

Americas

Argentina – Buenos Aires
Phone: +54-11-4733-2200
Fax: +54-11-4733-2211

Brasil – São Paulo
Phone: +55-11-3611-1311
Fax: +55-11-3611-0397

Canada – Toronto
Phone: +905-475-6222
Fax: +905-474-5520
Product Information Center: (Technical Support)
Phone: +905-470-4425
Fax: +905-474-5525

Colombia – Bogota
Phone: +57-1-231-9398
Fax: +57-1-660-0206

Mexico – Mexico City
Phone: +52-55-1106-0800
+01-800-733-8926
Fax: +52-55-1106-0901

United States – Harrisburg, PA
Phone: +717-564-0100
Fax: +717-986-7575
Product Information Center: (Technical Support)
Phone: +800-522-6752
Fax: +717-986-7575

For Latin/South American Countries not shown
Phone: +54-11-4733-2015
Fax: +54-11-4733-2083

Asia/Pacific

Australia – Sydney
Phone: +61-2-9554-2600
Fax: +61-2-9502-2556
Product Information Center: (Technical Support)
Phone: +61-2-9840-8200
Fax: +61-2-9634-6188

India – Bangalore
Phone: +91-80-285-40800
Fax: +91-80-285-40820

Indonesia – Jakarta
Phone: +65-6482-0311
Fax: +65-6482-1012

Japan – Toyko
Phone: +81-44-844-8111
Fax: +81-44-812-3207
Product Information Center: (Technical Support)
Phone: +81-44-844-8013
Fax: +81-44-812-3200

Korea – Seoul
Phone: +82-2-3415-4500
Fax: +82-2-3486-3810

Malaysia – Kuala Lumpur
Phone: +60-3-78053055
Fax: +60-3-78053066

New Zealand – Auckland
Phone: +64-9-634-4580
Fax: +64-9-634-4586

Philippines – Makati City
Phone: +632-848-0171
Fax: +632-867-8661

People's Republic of China
Hong Kong
Phone: +852-2735-1628
Fax: +852-2735-0243

Shanghai
Phone: +86-21-2407-1588
Fax: +86-21-2407-1599

Taiwan – Taipei
Phone: +886-2-8768-2788
Fax: +886-2-8768-2268

Singapore – Singapore
Phone: +65-6482-0311
Fax: +65-6482-1012

Thailand – Bangkok
Phone: +66-2-955-0500
Fax: +66-2-955-0505

Vietnam and Indochina –
Ho Chi Minh City
Phone: +84-8 930-5546
Fax: +84-8 930-3443

Europe/Middle East/Africa

Austria – Vienna
Phone: +43-1 90 5 60-0
Fax: +43-1 90 5 60-1333

Belgium – Kessel-Lo
Phone: +32-16-35-23-00
Fax: +32-16-35-23-52

Bulgaria – Sofia
Phone: +359-2-971-2152
Fax: +359-2-971-2153

Czech Republic – Kurim
Phone: +420-5-41-162-111
Fax: +420-5-41-162-223

Denmark – Glostrup
Phone: +45-43-480-452
Fax: +45-43-441-414

Egypt – Cairo
Phone: +20-2-29 04 281
Fax: +20-2-41 92 334

Estonia – Tartu
Phone: +372-5138-274
Fax: +372-7400-779

Finland – Helsinki
Phone: +358-95-12-34-20
Fax: +358-95-12-34-250

France – Cergy-Pontoise
Phone: +33-1-3420-8888
Fax: +33-1-3420-8600
Product Information Center: (Technical Support)
Phone: +33-1-3420-8943
Fax: +33-1-3420-8623

Germany – Bensheim
Phone: +49-6251-133-0
Fax: +49-6251-133-1600
Product Information Center: (Technical Support)
Phone: +49-6251-133-1999
Fax: +49-6251-133-1988

Germany – Langen
Phone: +49-6103-709-0
Fax: +49-6103-709-1223

Germany – Speyer
Phone: +49-6232-30-0
Fax: +49-6232-30-2243

Germany - HTS Division – Neunkirchen
Phone: +49-2247-305-0
Fax: +49-2247-305-122

Greece – Athens
Phone: +30-210-9370-396/397
Fax: +30-210-9370-655

Hungary – Budapest
Phone: +36-1-289-1000
Fax: +36-1-289-1010

Ireland – Dublin
Phone: +353-1-820-3000
Fax: +353-1-820-9790

Israel – Yokneam
Phone: +972-4-959-0508
Fax: +972-4-959-0506

Italy – Collegno (Torino)
Phone: +39-011-4012-111
Fax: +39-011-4031116

Lithuania – Vilnius
Phone: +370-5-2131-402
Fax: +370-5-2131-403

Netherlands – 's-Hertogenbosch
Phone: +31-73-624-62-46
Fax: +31-73-621-23-65
Product Information Center: (Technical Support)
Phone: +31-73-6246-999
Fax: +31-73-6246-998

Norway – Nesbru
Phone: +47-66-77-8886
Fax: +47-66-77-8855

Poland – Warsaw
Phone: +48-22-45-76-700
Fax: +48-22-45-76-720

Romania – Bucharest
Phone: +40-21-311-3479/3596
Fax: +40-21-312-0574

Russia – Moscow
Phone: +7-495-926-5506/07/08/09
Fax: +7-495-926-5505

Russia – St. Petersburg
Phone: +7-812-718-8192
Fax: +7-812-718-8193

Slovenia – Ljubljana
Phone: +386-1561-3270
Fax: +386-1561-3240

South Africa – Port Elizabeth
Phone: +2741-503-4500
Fax: +2741-581-0440

Spain – Barcelona
Phone: +34-93-291-0330
Fax: +34-93-201-7879
Product Information Center: (Technical Support):
Phone: +34-93-291-0330
Fax: +34-93-200-3779

Sweden – Upplands Väsby
Phone: +46-8-50-72-50-00
Fax: +46-8-50-72-50-01

Switzerland – Steinach
Phone: +41-71-447-0447
Fax: +41-71-447-0444

Turkey – Istanbul
Phone: +90-212-281-8181/2/3
Fax: +90-212-281-8184

Ukraine – Kiev
Phone: +380-044-206-2265
Fax: +380-044-206-2264

United Kingdom – Swindon
Phone: +44-8706-080-208
Fax: +44-1793-572-109
Product Information Center: (Technical Support)
Freephone GB: 0800-267-666
Phone: +44-208-420-8341 or 8343
+44-208-420-8081

For Middle East/African Countries Not Shown
Phone: +33-1-3420-8866
Fax: +33-1-3420-8300

1307191–3M–LUG–FP–3-07
Printed in the U.S.A.

Tyco Electronics Corporation
Harrisburg, Pennsylvania

1307191 Revised 3-07 3M-LUG-FP

tycoelectronics.com

Tyco Electronics

Our commitment. Your advantage.