THIS DRAWING IS UNPUBLISHED. RELEASED FOR PUBLICATION 20
© COPYRIGHT 20 BY - ALL RIGHTS RESERVED.

REVISIONS					
P	LTR	DESCRIPTION	DATE	DWN	APVD
	B	RELEASED PER ECO-20-010207	29JUN2020	JM	OD

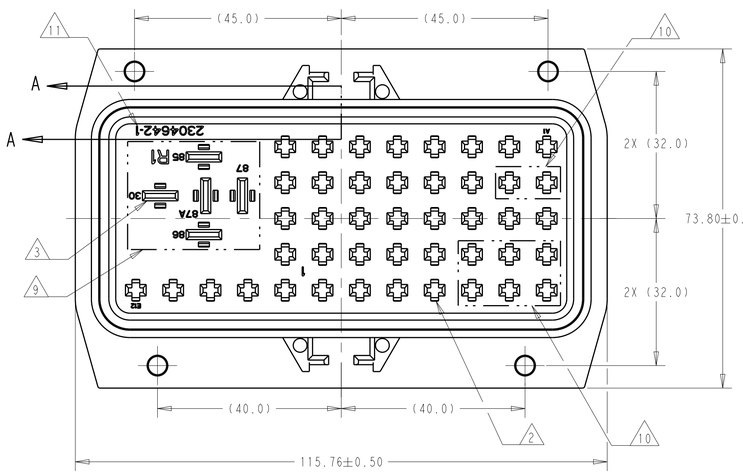

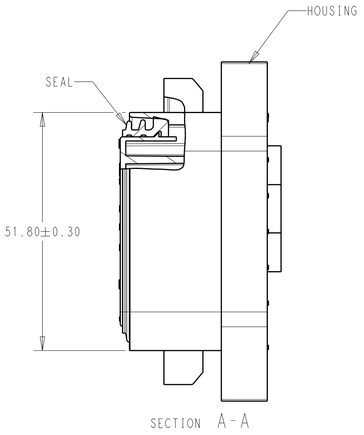

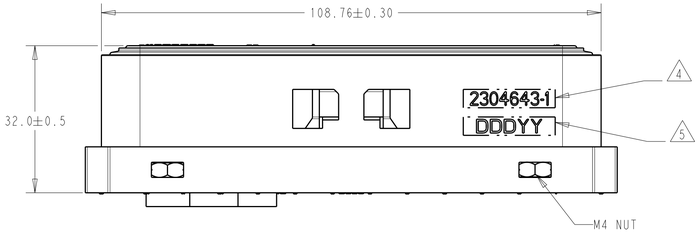

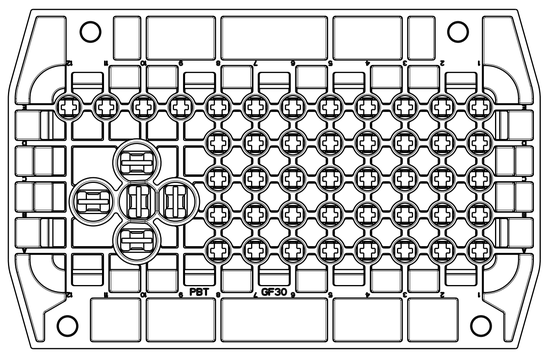

1. MATERIAL:
HOUSING: PBT GF30, COLOR: BLACK
SEAL: SILICONE, COLOR: BLUE
M4 NUTS: CARBON STEEL, FINISH: ZINC W/CLEAR CHROMATE (III)

2. CIRCUIT CAVITIES USE AMP MCP 2.8 RECEPTACLE TERMINALS SEE CUSTOMER DRAWING 1355036 FOR TERMINAL SELECTION. RECOMMENDED WIRE INSULATION RANGE 1.2-3.0 mm.

3. CIRCUIT CAVITIES USE AMP MCP 6.3 RECEPTACLE TERMINALS,SEE CUSTOMER DRAWING 1241438 FOR TERMINAL SELECTION. RECOMMENDED WIRE INSULATION RANGE 1.4-4.5 mm.

4. TE ASSEMBLY PART NUMBER MARKED IN APPROXIMATE AREA SHOWN.

5. DATE CODE IN DDDYY FORMAT MARKED IN APPROXIMATE AREA SHOWN.

6. RECOMMENDED SCREW IS M4 X 0.7 mm WITH MINIMUM THREAD LENGTH OF 10 mm. RECOMMENDED TORQUE RANGE 1.7-2.15 Nm.

7. FOR OPTIONAL TALL COVER, SEE CUSTOMER DRAWING 2098164.

8. FOR OPTIONAL SHORT COVER, SEE CUSTOMER DRAWING 1443996.

9. CIRCUIT PATTERN ACCEPTS ISO MINI RELAYS PER ISO 7588-1.

10. CIRCUIT PATTERN ACCEPTS BLADE TYPE FUSES PER ISO 8820-3 OR ISO 280 MICRO RELAYS PER ISO 7588-3 OR MINI CIRCUIT BREAKERS PER SAE J553.

11. TE HOUSING PART NUMBER SHOWN FOR REFERENCE ONLY, SEE TABLE BELOW FOR CORRESPONDING TE ASSEMBLY NUMBER.

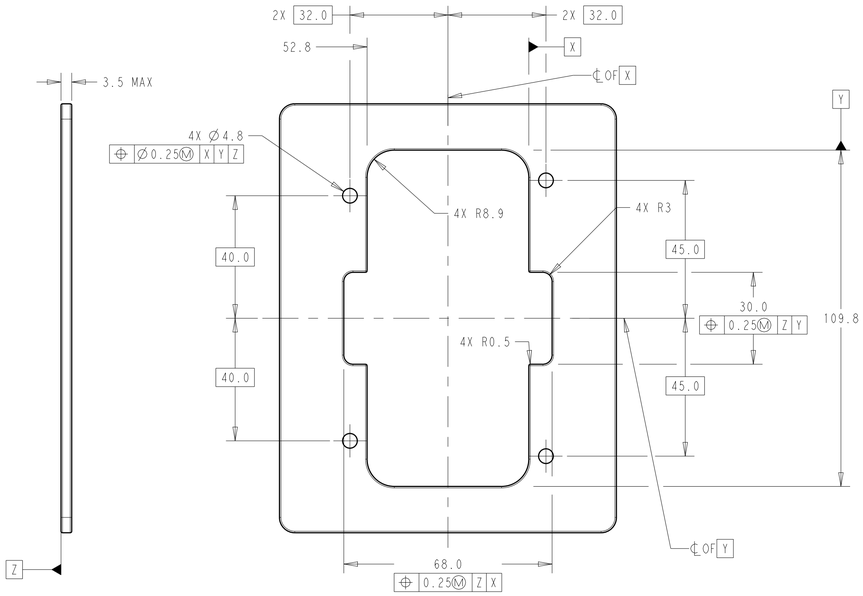

RECOMMENDED PANEL CUTOUT
SCALE 1:1

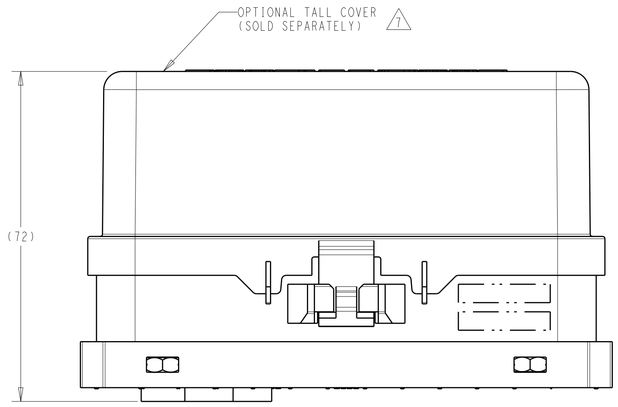

VIEW SHOWN FOR REFERENCE ONLY

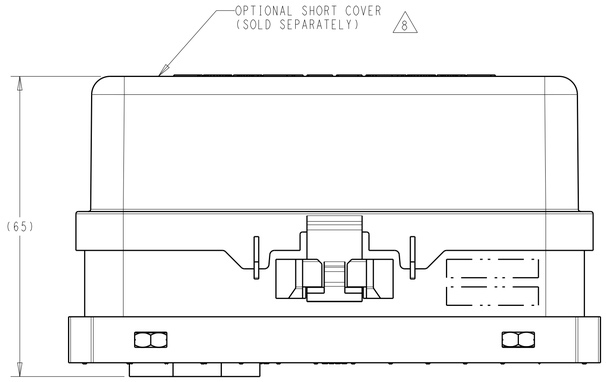

VIEW SHOWN FOR REFERENCE ONLY

CIRCUITS	DESCRIPTION	PART NO
(60) AMP MCP 2.8	60 POS, AMP MCP 2.8, REC HSG ASSY, SEALED	2304643-4
(12) AMP MCP 2.8 / (15) AMP MCP 6.3	27 POS, HYBRID, REC HSG ASSY, SEALED	2304643-3
(28) AMP MCP 2.8 / (10) AMP MCP 6.3	38 POS, HYBRID, REC HSG ASSY, SEALED	2304643-2
(44) AMP MCP 2.8 / (5) AMP MCP 6.3	49 POS, HYBRID, REC HSG ASSY, SEALED	2304643-1

THIS DRAWING IS A CONTROLLED DOCUMENT.

DIMENSIONS: mm

TOLERANCES UNLESS OTHERWISE SPECIFIED:
0 PLC ±0.5
1 PLC ±0.2
2 PLC ±.-
3 PLC ±.-
4 PLC ±.-
ANGLES ±.-

MATERIAL 1

FINISH -

DWN L. HEYECK 11JUL2016
CHK D. STRAUSSER 11JUL2016
APVD O. DONKERVOET 24SEP2019

PRODUCT SPEC 108-151059
APPLICATION SPEC 114-151059
WEIGHT -

TE Connectivity

NAME FUSE AND RELAY BOX, FLANGED

SIZE	CAGE CODE	DRAWING NO	RESTRICTED TO
A1	-	C-2304643	-

CUSTOMER DRAWING | SCALE 3:2 | SHEET 1 OF 2 | REV B

THIS DRAWING IS UNPUBLISHED. RELEASED FOR PUBLICATION 20
© COPYRIGHT 20 BY - ALL RIGHTS RESERVED.

REVISIONS

P	LTR	DESCRIPTION	DATE	DWN	APVD
	-	SEE SHEET 1	-	-	-

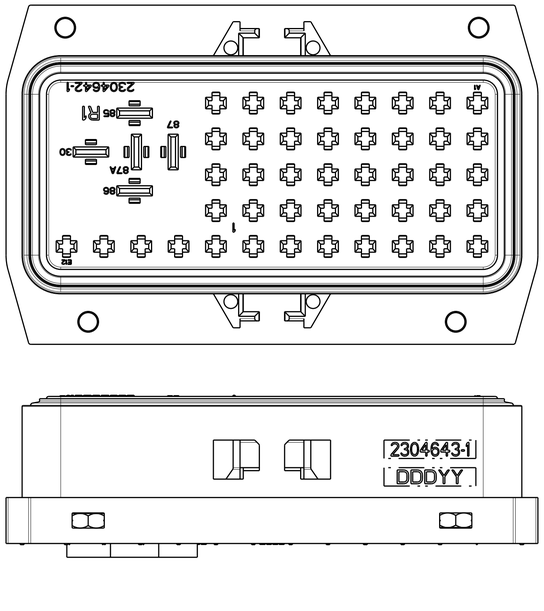

2304643-1 SHOWN

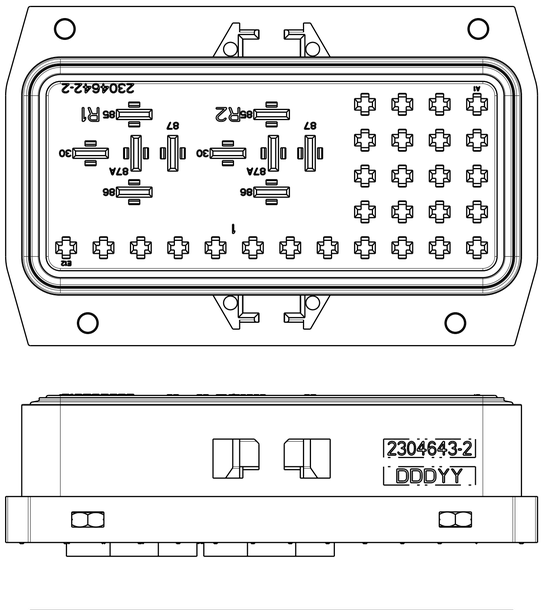

2304643-2 SHOWN

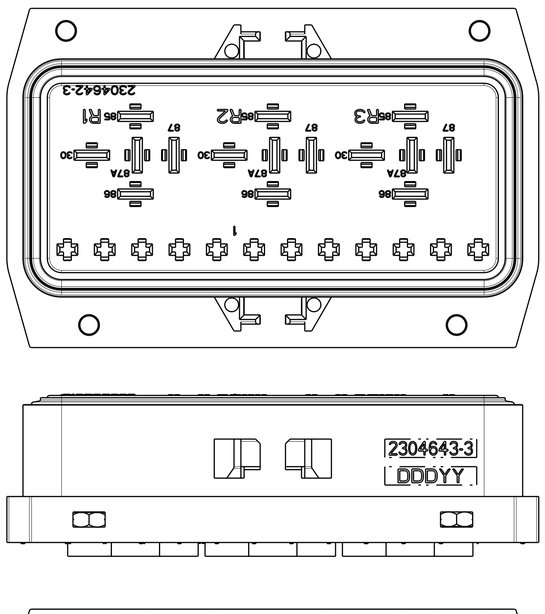

2304643-3 SHOWN

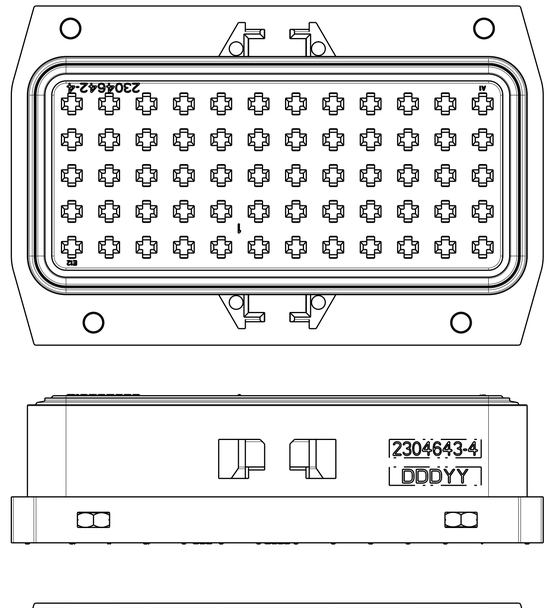

2304643-4 SHOWN

THIS DRAWING IS A CONTROLLED DOCUMENT.

DIMENSIONS: mm

TOLERANCES UNLESS OTHERWISE SPECIFIED:
0 PLC ±0.5
1 PLC ±0.2
2 PLC ±-
3 PLC ±-
4 PLC ±-
ANGLES ±-

MATERIAL

FINISH - -

DWN L. HEYECK 11JUL2016
CHK D. STRAUSSER 11JUL2016
APVD Q. DONKERVOET 24SEP2019
PRODUCT SPEC 108-151059
APPLICATION SPEC 114-151059
WEIGHT -

TE Connectivity

NAME FUSE AND RELAY BOX, FLANGED

SIZE	CAGE CODE	DRAWING NO	RESTRICTED TO
A1	-	C-2304643	-

CUSTOMER DRAWING | SCALE 3:2 | SHEET 2 OF 2 | REV B