THIS DRAWING IS UNPUBLISHED. RELEASED FOR PUBLICATION 2020
© COPYRIGHT 2019 BY - TE CONNECTIVITY ALL RIGHTS RESERVED.

REVISIONS					
P	LTR	DESCRIPTION	DATE	DWN	APVD
	B	RELEASE FOR PRODUCTION	24JAN2020	STK	DK

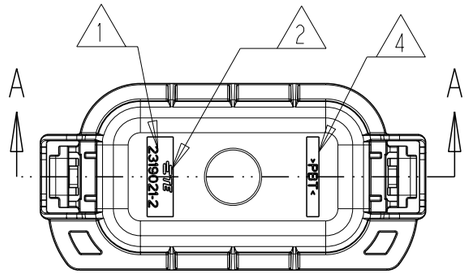

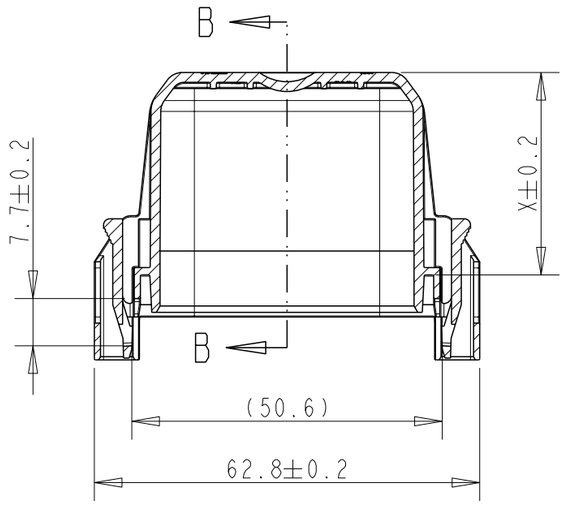

SECTION A-A

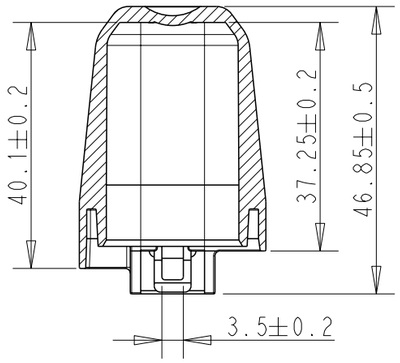

SECTION B-B

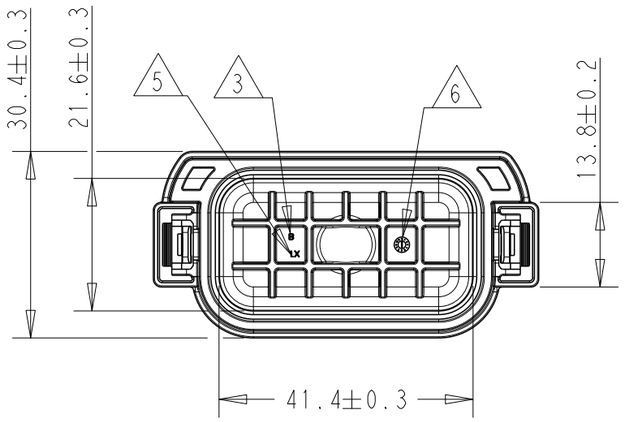

1. TE CONNECTIVITY PART NUMBER
2. TE CONNECTIVITY TRADEMARK
3. PART REVISION INDEX- SEE TABLE
4. MATERIAL IDENTIFICATION
5. MOLD CAVITY IDENTIFICATION NUMBER
6. TE CONNECTIVITY DATE CODE
7. 2319021-1 COVER USE WITH HOUSING ASSEMBLY:
   8P MINI FUSE HSG ASSY: 2319023-1 (FUSE ONLY)
8. 2319021-2 COVER USE WITH HOUSING:
   1P MAXI FUSE HSG ASSY: 2319826-1,-2
   8P MINI FUSE/RELAY HSG ASSY: 2319023-2
9. PACKAGING: BULK

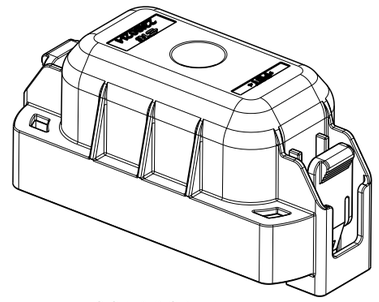

2319021-1

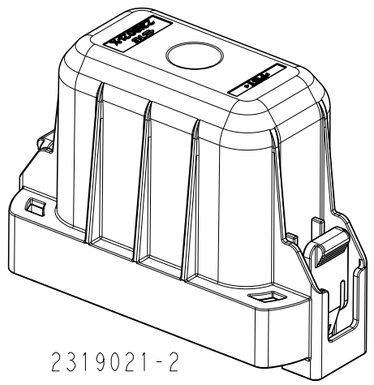

2319021-2

2319021-2 AS SHOWN

TE PART NO	REV	DESCRIPTION	MATERIAL	'X' DIM	WEIGHT[g]	SURFACE COLOR	ITEM
2319021-2	B	COVER FOR 8POS MINIFUSE BOX, 1POS MAXIFUSE BOX	PBT	33.00	17.5	BLACK	2
2319021-1	B	COVER FOR 8POS MINIFUSE BOX	PBT	17.70	12.9	BLACK	1

THIS DRAWING IS A CONTROLLED DOCUMENT.

DIMENSIONS: mm

TOLERANCES UNLESS OTHERWISE SPECIFIED:
0 PLC ±-
1 PLC ±-
2 PLC ±-
3 PLC ±-
4 PLC ±-
ANGLES ±

MATERIAL: SEE TABLE -

FINISH: - -

DWN 11NOV2017 S. TEJUS KIRAN
CHK 12NOV2017 KASHYAP P. B.
APVD 12NOV2017 DAVID KLEIN
PRODUCT SPEC 108-94652
APPLICATION SPEC 114-94530
WEIGHT SEE TABLE

TE Connectivity

NAME
COVER
8 POS MINI FUSE/RELAY BOX
1 POS MAXI FUSE BOX

SIZE	CAGE CODE	DRAWING NO	RESTRICTED TO
A3	00779	C-2319021	-

CUSTOMER DRAWING | SCALE 1:1 | SHEET 1 OF 1 | REV B