© 2024 TE Connectivity. All Rights Reserved.

REVISIONS

P	LTR	DESCRIPTION	DATE	DWN	APVD
	A	TE STANDARD UPDATED	22JUL2024	KS	RB

EC No.

350 AMP POWER RELAY (28 VDC)

TOP MOUNTING ENVIRONMENTALLY SEALED AUXILIARY CONTACT

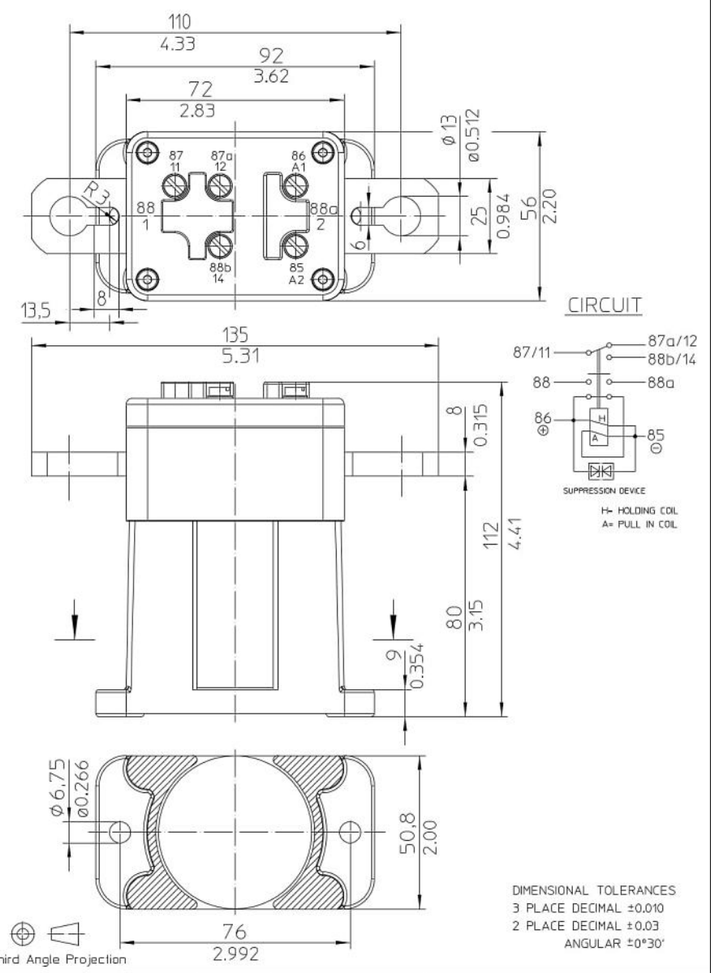

	Date	Name	mm	Scale
Drawn	11.06.2008	Kaise	General Tolerances	1:1
Check	03.11.2008	Kaise		

Elektrotechnik - GmbH & Co KG
D - 72218 Wildberg

Drawing No: 26-06-13-905

NSN:

EC No.

350 AMP POWER RELAY (28 VDC)

TOP MOUNTING ENVIRONMENTALLY SEALED AUXILIARY SEALED

MEETS THE REQUIREMENTS OF MIL-R-6106

ENVIRONMENTAL CHARACTERISTICS

TEMPERATUR RANGE.....-55°C TO +74°C (-67°F TO +165°F)
MAX. ALTITUDE RATING.....50 000 FT
SEAL.....IEC PUBLICATION 529; IP 67; 6 FT
SHOCK G-LEVEL.....MIL-STD-202, TEST METHOD 213, HALF SINE = 11 MSEC/ 30 G
VIBRATION ENERGIZED.....MIL-STD-202, TEST CONDITION D = 20 G
VIBRATION DE-ENERGIZED.....MIL-STD-202, TEST CONDITION C = 10 G
ACCELERATION.....15 G

ELECTRICAL CHARACTERISTICS

MIN. INSULATION RESISTANCE, INITIAL.....100 MEGOHMS
AFTER LIFE OR ENVIRONMENTAL.....50 MEGOHMS
DIELECTRIC WITHSTANDING VOLTAGE SEA-LEVEL 1 MINUTE.....1050 VOLTS
DIELECTRIC WITHSTANDING VOLTAGE ALTITUDE 1 MINUTE.....500 VOLTS
MAX. CONTACT DROP INITIAL.....0.15 VOLTS
AFTER LIFE TEST.....0.175 VOLTS
OVERLOAD.....2400 AMP
RUPTURE CURRENT.....3500 AMP
DUTY RATING.....350 AMP CONTINUOUS

RATED CONTACT LOAD (28 VDC)

MAIN CONTACT
RESISTIVE LOAD.....50 000 CYCLES WITH 350 AMP
INDUCTIVE LOAD.....10 000 CYCLES WITH 85 AMP
MOTOR LOAD.....50 000 CYCLES WITH 350 AMP
MECHANICAL LIFE.....100 000 CYCLES WITH 85 AMP

AUXILIARY CONTACT
CONTINUOUS CURRENT.....8 AMP
MAKE AND BREAK.....16 AMP

OPERATING CHARACTERISTICS

COIL DATA
VOLTAGE RANGE.....18-32 VDC
NOMINAL VOLTAGE.....28 VDC
PICK UP VOLTAGE MAX.....18 VDC FULL TEMP. RANGE
RESISTANCE PULL IN COIL.....2.8 OHMS ±20%
PULL IN CURRENT MAX.....8 AMP FOR 30 MILLISECONDS
RESISTANCE HOLDING COIL.....82 OHMS ±10%
HOLDING CURRENT MAX.....0.40 AMP
DROP OUT VOLTAGE.....9 VDC FULL TEMP. RANGE

TIME-MILLISECONDS-MAX
OPERATE.....25
RELEASE.....20
BOUNCE.....3,5

WEIGHT.....1,3 KG = 2.9 POUND MAX.

WIRE SECTION (AT NOMINAL LOAD).....MIN. 150 mm²/ 0.233 sq.in/ MCM 300

	Date	Name	mm	Scale
Drawn	11.06.2008	Kaise	General Tolerances	1:2
Check	03.11.2008	Kaise		

Drawing No: 26-06-13-905

NSN:

NOTES:
Bemerkungen:

1 TE-CONNECTIVITY ORDER-NUMBER
TE-Connectivity Bestellnummer

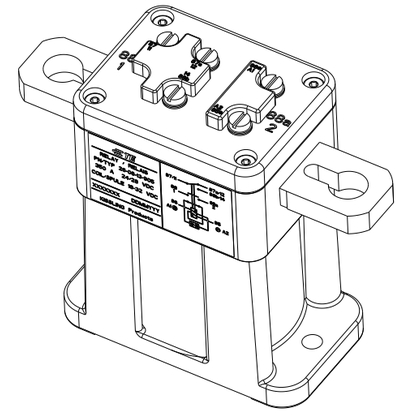

ISO 1:2

1	K1133295	A	350AMP POWER RELAY (28VDC) 350AMP Leistungsrelais (28VDC)	1
PART/TCPN NO.		REV.	DESCRIPTION	ITEM NO.

THIS DRAWING IS A CONTROLLED DOCUMENT.

DIMENSIONS:	TOLERANCES UNLESS OTHERWISE SPECIFIED: DIN ISO 2768 cL
mm	0 PLC ± 1 PLC ± 2 PLC ± 3 PLC ± 4 PLC ± ANGLES ±
MATERIAL	FINISH

DWN	G.Kaiser	11JUN2008
CHK	G.Kaiser	11JUN2008
APVD	G.Kaiser	03NOV2008
PRODUCT SPEC		
APPLICATION SPEC		
WEIGHT		

TE Connectivity

NAME
350AMP POWER RELAY (28VDC)
350AMP Leistungsrelais (28VDC)

SIZE	CAGE CODE	DRAWING NO	RESTRICTED TO
A3	00779	C-26-06-13-905	-

CUSTOMER DRAWING | SCALE | SHEET 1 OF 1 | REV A

1470-19 (3/13)