EC No.
15306
15380

Battery Disconnector 200A

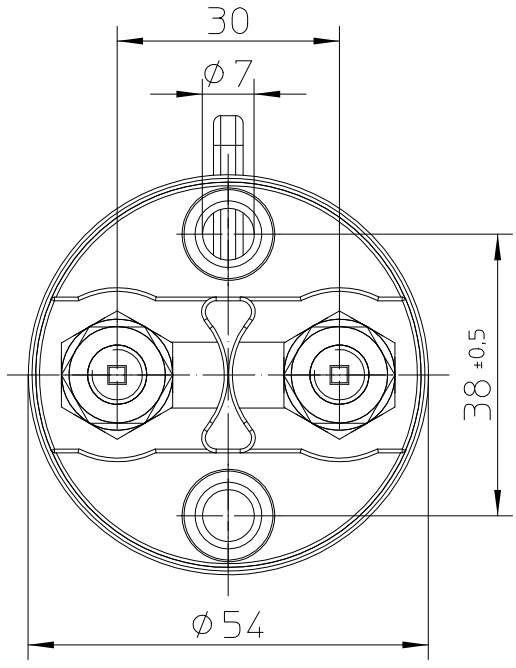

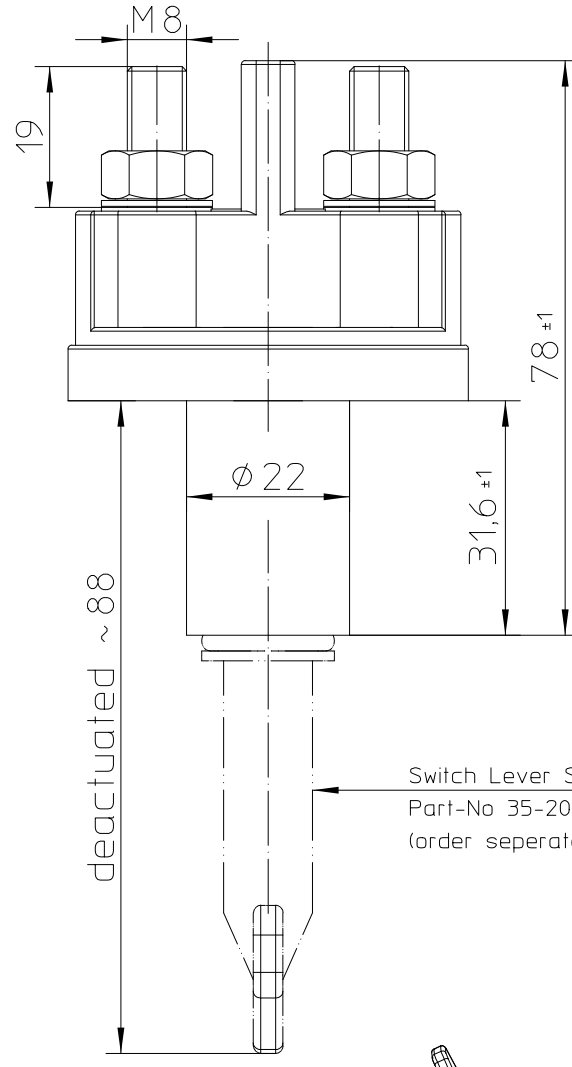

Circuit

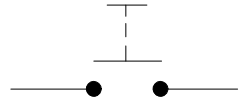

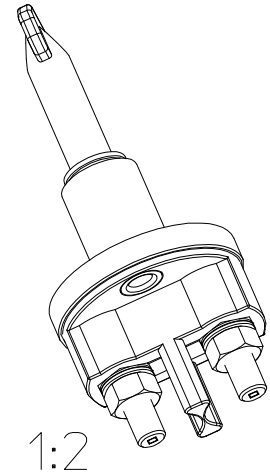

1:2

Technical Data:

Case Material	PA GF black
Switch Lever Material	PA GF green
Min.Insulation Resistance	100MOhm
Dielectric Withstanding Voltage	1050V-1min.
Max.Contact Drop during Resistive Load	150mV
Voltage	up to 48VDC
Duty Rating	200A
Overload	500A-180sec.
	1000A-30sec.
Sealing	IP 67/ IEC 529
Vibration	4G/ 50-2000Hz
Shock G-Lever	6G/ 11ms
Weight	~130g / 0.28 pound
Temperature Range	-40°C to +85°C
Wire Section (At Nominal Load)	min. 70mm2
Mounting Position	optional
Switch Lever	removeable and unidirectional
Switch Lever Spare Part-No	35-200-018
Torque (Main Terminals)	12-13Nm

For this drawing we reserve the copyright in accordance with DIN ISO 16016

	Date	Name
Create	03.12.2019	Seege
Edited	03.12.2019	Seege
Check	10.03.2020	Grind

mm

Scale 1:1

General Tolerances DIN ISO 2768 cL

Drawing No: 35-203

NSN.: