Four Pole, Electrically Held, 2 Amps and Less (Continued)

.150 Grid-space Relays
Type 3SBH (4PDT)

Product Facts

- **Low profile… only 0.32 inches high**
- **Long life version available**
- **Qualified to MIL-R-39016/14**

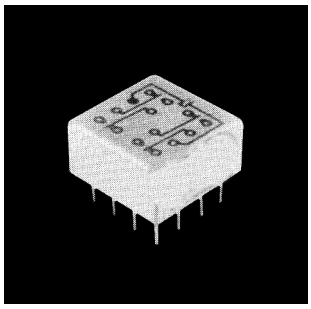

This .150 four pole double throw Grid-space relay is the companion to the two pole 3SBC type shown on page 1-41. It also features the same .150 inch pin spacing that allows you to insert the relay with no intermediate pin spreaders. There is adequate clearance for conductors to reach all pins. It is a very compact 4 pole double throw 2 ampere relay.

Electrical Characteristics

Contact Ratings —
DC resistive — 2 amps at 28 volts
DC inductive — 0.5 amps at 28 volts, 200 mH
AC resistive — 0.5 amps at 115 volts, 400 or 60 Hz (enclosure isolated from ground, or enclosure and movable contact at same potential)
AC — 0.125 amps at 115 volts (enclosure at line potential with respect to movable contact)
Low-level — low-level operation at 50 millivolts, 30 µA, 33 ohm miss level

Contact Resistance —
0.050 ohms max.;
0.150 ohms after life test

Life —
100,000 operations at rated loads listed;
1,000,000 operations at low-level loads

Operating Characteristics

Operate Time — 4 ms max.

Release Time — 4 ms max.

Contact Bounce — 1.5 ms

Dielectric Strength —
500 volts rms at sea level;
350 volts rms at 70,000 feet

Insulation Resistance —
1,000 megohms min. over temperature range

Environmental Characteristics

Vibration — 30 G, to 3,000 Hz

Shock — 100 G at 11 ms

Temperature — -65°C to +125°C

See page 1-57 for Mounting Forms, Terminals and Circuit Diagrams.

Coil Table (All Values DC)* Type 3SBH, 4 Pole Relay — 250 mW Sensitivity: (Code 1)

SENSITIVITY CODE: 1					
		Voltage Calibrated, Code: 5			
Coil Code Letter	Coil Resistance at 25C ohms	Suggested Source Volts†	Maximum Operate Volts at 25C	Release Voltage Range at 25C	
				Max.	Min.
B	28 ± 10%	4.0- 7.0	2.7	1.6	0.3
D	73 ± 10%	6.0-11.0	4.2	2.5	0.4
E	115 ± 10%	8.0-14.0	5.4	3.2	0.6
G	280 ± 10%	12 -22.0	8.4	5.0	0.8
H	430 ± 10%	15 -26.0	10.3	6.0	1.0
K	720 ± 10%	20 -35.0	13.5	8.1	1.5
N	1040 ± 10%	26 -46.0	17.5	10.5	1.9

*Values listed are factory test and inspection values. User should allow for meter variations.
†Applicable over the operating temperature range in circulating air.

Ordering Instructions

Catalog-selected Relays: The catalog number is derived by choosing the proper CODE for each of the six relay characteristics in the order in which the codes are listed.

Example: The relay selected in this example is a 4PDT .150-grid relay, voltage calibrated, end bracket mounting, 0.13 inch solder hook header, 720 ohms coil resistance, and 250 mW sensitivity. By choosing the proper code for each of these relay characteristics, the catalog number is identified as 3SBH5131K1. The letter R following sensitivity code indicates relay received 5000 operation miss-test. Ex. 3SBH5131K1R.

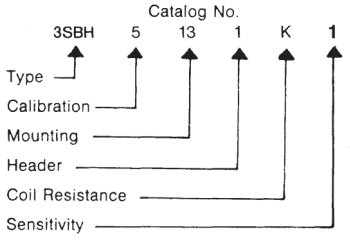

* The part number example shown on this page is for catalog items. For a list of specific QPL part numbers, please see the index in Section 15.

Catalog 5-1773450-5
Revised 3-13

www.te.com

Dimensions are shown for reference purposes only. Specifications subject to change.

Dimensions are in millimeters unless otherwise specified.

USA: +1 800 522 6752
Asia Pacific: +86 0 400 820 6015
UK: +44 800 267 666

For additional support numbers please visit www.te.com

Four Pole, Electrically Held, 2 Amps and Less (Continued)

.150 Grid-space Hybrid Relays

Type 3SBH (4PDT)

Product Facts

- **Low profile… only 0.32 inches high**
- **Long life version available**
- **Qualified to MIL-R-39016/53 & 54**

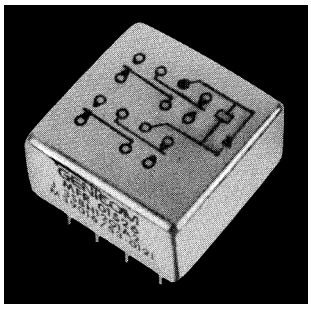

The 4PDT .150 Grid-space hybrid relays are advanced designs of the standard high reliability 4PDT .150 Grid-space relays. In the single diode version, the relay coil-back electromotive force is suppressed to prevent circuit/component damage. With the dual diode version, a steering diode is added to the coil circuit, along with the suppression diode. This steering diode prevents operation of the relay by reverse polarity voltages and protects the suppression diode. The single diode version is qualified to MIL-R-39016/53 and the dual diode is qualified to MIL-R-39016/54.

Electrical Characteristics

Contact Ratings —
DC resistive — 2 amps at 28 volts
DC inductive — 0.5 amps at 28 volts, 200 mH
AC resistive — 0.5 amps at 115 volts, 400 or 60 Hz (enclosure isolated from ground, or enclosure and movable contact at same potential)
AC — 0.125 amps at 115 volts (enclosure at line potential with respect to movable contact)
Low-level — 50 µA at 50mV

Contact Resistance —
0.050 ohms max.;
0.150 ohms after life test

Life — 100,000 operations at rated loads listed; 1,000,000 operations at low-level loads

Operating Characteristics

Operate Time — 4 ms max.

Release Time — 6 ms max.

Contact Bounce — 2.0 ms

Dielectric Strength (Note 1) —
500 volts rms at sea level;
350 volts rms at 70,000 feet

Insulation Resistance (Note 1) —
1,000 megohms min. over temperature range

Semiconductor Characteristics at 25°C

Max. Negative Transient — 1 volt

Breakdown Voltage —
100 Vdc @ 10 µA min.

Max. Leakage Current —
1 µA @ 50 Vdc

Note 1: Tests for dielectric withstanding voltage and insulation resistance should be made with "coil terminals" shorted together to avoid unnecessary electrical stress to semiconductor elements.

See page 1-57 for Mounting Forms, Terminals and Circuit Diagrams.

Coil Table (All Values DC)* Type 3SBH, 4 Pole Relay — 250 mW Sensitivity: (Code 5 single diode, Code 6 dual diodes)

Single Diode		SENSITIVITY CODE: 5			
		Voltage Calibrated, Code: 5			
Coil Code Letter	Coil Resistance at 25C ohms	Suggested Source Volts†	Maximum Operate Volts at 25C	Release Voltage Range at 25C	
				Max.	Min.
B	28 ± 10%	4.0- 7.0	2.7	1.6	0.3
D	73 ± 10%	6.0-11.0	4.2	2.5	0.4
E	115 ± 10%	8.0-14.0	5.4	3.2	0.6
G	280 ± 10%	12 -22.0	8.4	5.0	0.8
H	430 ± 10%	15 -26.0	10.3	6.0	1.0
K	720 ± 10%	20 -35.0	13.5	8.1	1.5
N	1040 ± 10%	26 -46.0	17.5	10.5	1.9
Dual Diode		**SENSITIVITY CODE: 6**			
B	28 ± 10%	4.0- 7.0	3.7	2.3	0.5
D	73 ± 10%	6.0-11.0	5.2	3.2	0.6
E	115 ± 10%	8.0-14.0	6.4	3.9	0.8
G	280 ± 10%	12.0-22.0	9.4	5.7	1.0
H	430 ± 10%	15 -26.0	11.3	6.7	1.2
K	720 ± 10%	20 -35.0	14.5	8.8	1.7
N	1040 ± 10%	26 -46.0	18.1	11.1	2.1

*Values listed are factory test and inspection values. User should allow for meter variations.
†Applicable over the operating temperature range in circulating air.

Catalog 5-1773450-5
Revised 3-13

www.te.com

Dimensions are shown for reference purposes only. Specifications subject to change.

Dimensions are in millimeters unless otherwise specified.

USA: +1 800 522 6752
Asia Pacific: +86 0 400 820 6015
UK: +44 800 267 666

For additional support numbers please visit www.te.com

Four Pole, Electrically Held, 2 Amps and Less (Continued)

Mounting Forms (3SBH)

(Vibration note with each form is acceleration from 55 to 3000 Hz)

No Mount

Mounting Code	Vibration*
00	30g

*Assumes relay held securely by potting or other means.

End Bracket

Mounting Code	Vibration
13	30g

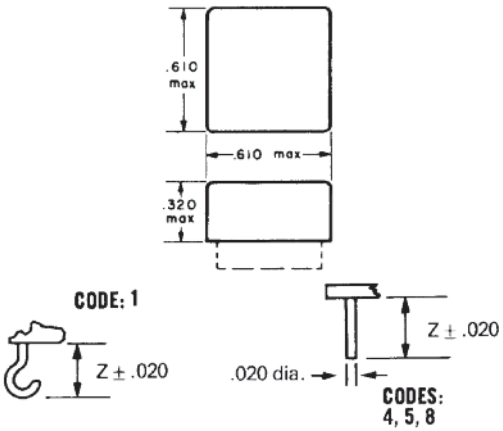

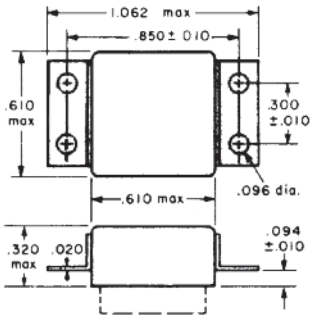

All dimensions in inches

TOLERANCES (Unless otherwise specified)	
Hundredths	±0.020
Thousandths	±0.005

Header Types

Type	Z Dimension	Header Code
Solder hook	0.13	1
Straight pin	0.12	8
Straight pin socket or PCB type)	0.19	4
Straight pin	0.25	5

Header and Connection Diagrams

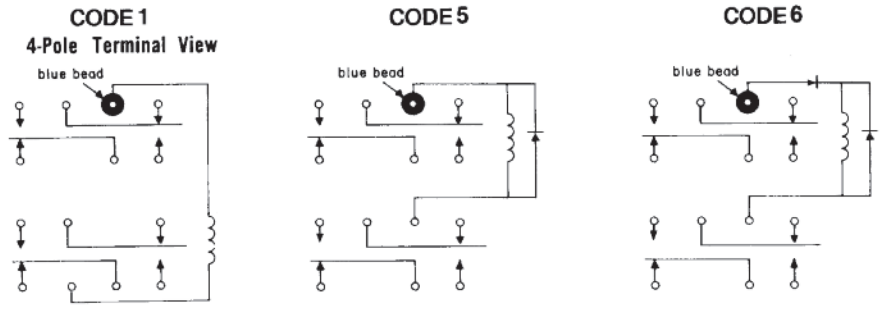

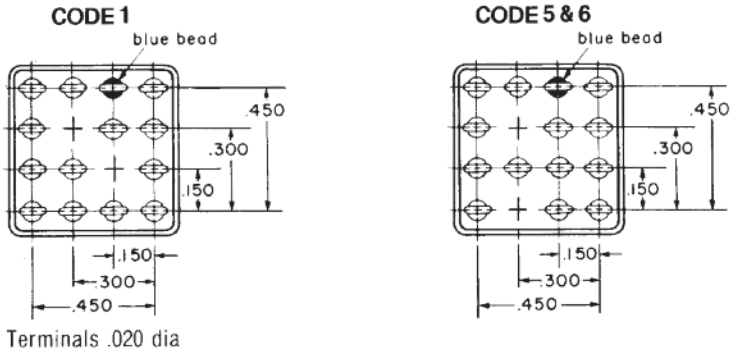

Terminals .020 dia

Ordering Instructions

Catalog-selected Relays: The catalog number is derived by choosing the proper CODE for each of the six relay characteristics in the order in which the codes are listed.

Example: The relay selected in this example is a 4PDT .150-grid relay, voltage calibrated, end bracket mounting, 0.13 inch solder hook header, 720 ohms coil resistance, and 250 mW sensitivity. By choosing the proper code for each of these relay characteristics, the catalog number is identified as 3SBH5131K5. The letter R following sensitivity code indicates relay received 5000 operation miss-test. Ex. 3SBH5131K5R.

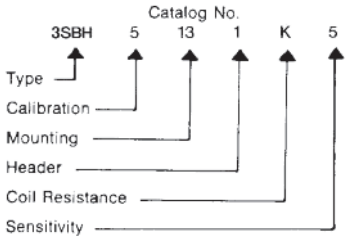

* The part number example shown on this page is for catalog items. For a list of specific QPL part numbers, please see the index in Section 15.

Catalog 5-1773450-5
Revised 3-13

www.te.com

Dimensions are shown for reference purposes only. Specifications subject to change.

Dimensions are in millimeters unless otherwise specified.

USA: +1 800 522 6752
Asia Pacific: +86 0 400 820 6015
UK: +44 800 267 666

For additional support numbers please visit www.te.com