Switches

Ruggedized Multimode Switches

Refractive Plate Switch

Part Number 6588871-1

Product Facts:

- **No optical path interruption @200 G's for 8 ms**
- **Successfully passed MIL_S_901D (Navy) Heavyweight Shock Test (Barge Test)**
- **Fiber type 62.5/125um multimode**



Tyco Electronics' "Ruggedized" Refractive Plate Switch is a multimode optical switch that is capable of withstanding a 200 G shock with a duration of >8ms without interruption of the signal path.

This switch is designed for extreme environments that require absolute product quality on optical installations and optical signal integrity.

Specifications

Operating Temperature Range — -30° to +85° C

Storage Temperature Range — -40° to +85° C

Durability — >1,000,000 cycles

Minimum Actuation Voltage — 4.75 V

Maximum Actuation Voltage — 5.25 V

Actuation Current at Typical — 5.0 V

Actuation Voltage — 100mA (maximum)

Product Dimensions:

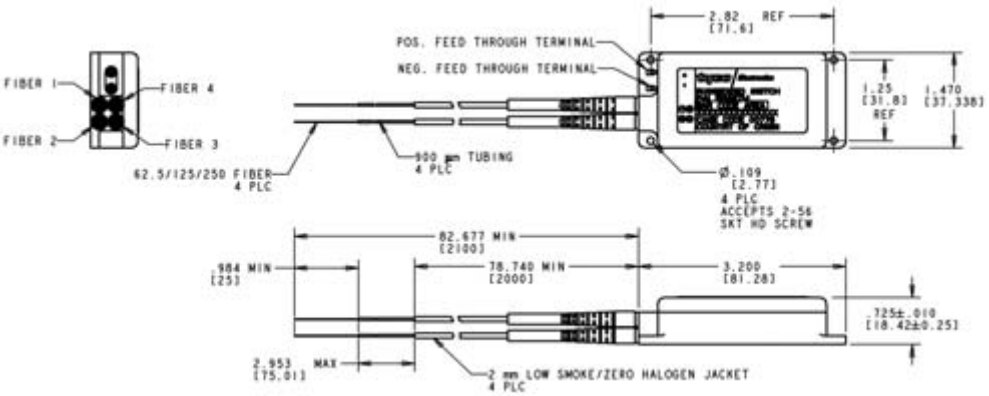

NOTE
Dimensions are Inches over millimeters

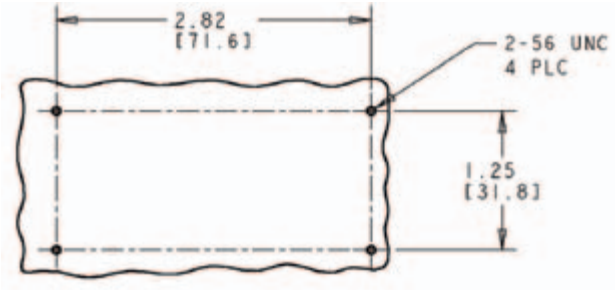

Recommended Mounting Layout

Note: Part Numbers are RoHS compliant except: ♦ Indicates non-RoHS compliant.

Catalog 1307895
Revised 3-06

www.tycoelectronics.com

Dimensions are in millimeters and inches unless otherwise specified. Values in brackets are standard equivalents.

Dimensions are shown for reference purposes only. Specifications subject to change.

USA: 1-800-522-6752
Canada: 1-905-470-4425
Mexico: 52-55-1106-0800
C. America: 57-1-254-4444

South America: 55-11-2103-6000
Hong Kong: 852-2735-1628
Japan: 81-44-844-8013
UK: 44-208-420-8341

Switches (Continued)

Multimode
1 x 2 SPDT Switch
Dual 1 x 2 DPDT Switch
2 x 2 Bypass Switch

Product Facts

- **Low profile**
- **Utilizes pivoting mirror**
- **Wide wavelength range**
- **Low insertion loss**
- **Excellent repeatability**
- **Environmentally stable**
- **Shock and vibration resistant**
- **Board or chassis mounting**
- **Optical & electrical leads exit from one end for easy cable routing**



Tyco Electronics Low Profile Fiber Optic Switches are miniature, board mountable devices that permit the switching of an optical signal from one fiber to another. Switching is accomplished by a slight pivoting motion of a spherical mirror which reflects the optical signal to the appropriate fiber. This patented imaging technology provides very low optical loss.

Tyco Electronics' Fiber Optic Switches can be terminated with any Tyco fiber optic connector, and they are available in the following configurations:

- **1 x 2 SPDT Switch**
- **Dual 1 x 2 DPDT Switch**

Tyco Electronics' SPDT and DPDT Switches permit the transfer of optic signals from an input fiber to either of two output fibers. Switches are applied to the positive terminal. The switch reverts to its original state when power is removed.

- **2 x 2 Bypass Switch**

Tyco Electronics' Bypass Switches provide bypass protection for fiber optic ring networks. They also provide bypass protection for fiber optic ring networks per IEEE 802.5 and ANSI FDDI standards.

A self-test path permits testing the node's transmitter against its receiver when the switch is in the bypass mode. This transmitter - receiver path is attenuated to prevent saturation of the receiver, while maintaining minimal light loss in the bypass path.

Specifications		
Configuration	**1 x 2 and Dual 1 x 2**	**2 x 2 Fully Reversing Bypass**
Switching speed	10 milliseconds maximum	10 milliseconds maximum
Operating wavelength	750–1450 nanometers	750–1450 nanometers
Insertion loss at 1300nm	0.8 dB max. per FOTP-34, Method A2	0.8 dB max. per FOTP-34, Method A2
		5 dB on loopback path max
Crosstalk	≤45 dB per FOTP-42	≤45 dB per FOTP-42
Switch driver	5 V at 80mA max.	5 V at 80mA max.
Drop In/Drop Out	Drop In: 4.0 V minimum	Drop In: 4.0 V minimum
Voltage	Drop Out: 0.5 V minimum	Drop Out: 0.5 V minimum
Fiber types	Graded index 50/125, 62.5/125	Graded index 50/125, 62.5/125
	(others available upon request)	(others available upon request)
Lead length	1 meter	1 meter
Temperature range	Operating –10°C to +65°C per FOTP-3, C2	Operating –10°C to +65°C per FOTP-3, C2
	Storage –30°C to +70°C per FOTP-188, 4	Storage –30°C to +70°C per FOTP-188, 4
Connector styles	ST Style	ST Style
	(others available upon request)	(others available upon request)
Electrical interface	Bent pins for PCB soldering,	Bent pins for PCB soldering,
	straight pins for soldering,	or straight pins for soldering, or
	AMP modular connector	AMP modular connector
Durability	>1 million cycles	>1 million cycles
Weight (unconnectorized)	<1 oz.	<1 oz.

Note: IL is for unconnectorized product

Catalog 1307895
Revised 3-06

www.tycoelectronics.com

Dimensions are in millimeters and inches unless otherwise specified. Values in brackets are standard equivalents.

Dimensions are shown for reference purposes only. Specifications subject to change.

USA: 1-800-522-6752
Canada: 1-905-470-4425
Mexico: 52-55-1106-0800
C. America: 57-1-254-4444

South America: 55-11-2103-6000
Hong Kong: 852-2735-1628
Japan: 81-44-844-8013
UK: 44-208-420-8341

Multimode
1 x 2 SPDT Switch
Dual 1 x 2 DPDT Switch
2 x 2 Bypass Switch (Continued)

1 x 2 SPDT

Application Information

Possible Application

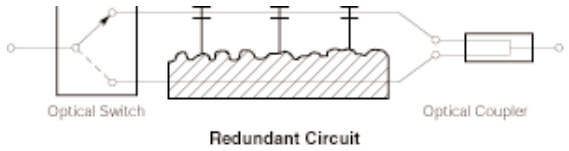

Redundant Circuit

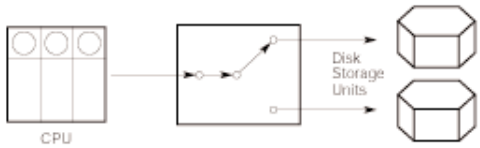

Multiple Users (uni-directional)

Schematic

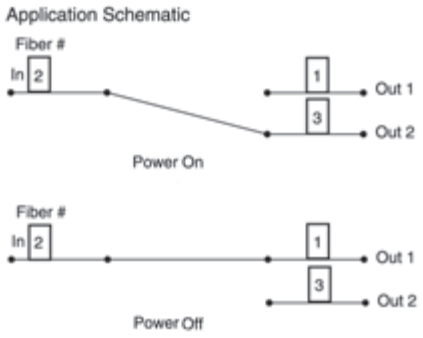

Dual 1 x 2 DPDT

Possible Application

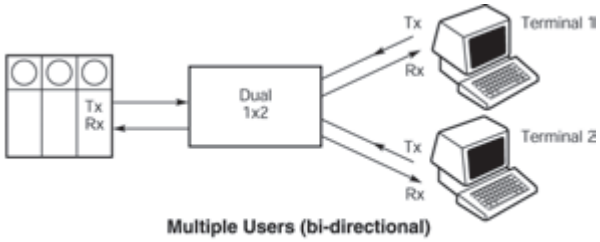

Multiple Users (bi-directional)

Schematic

Position 1

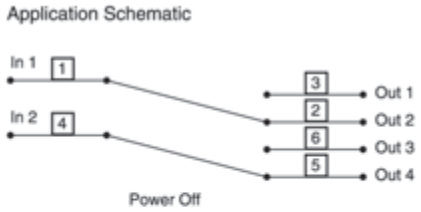

Position 2

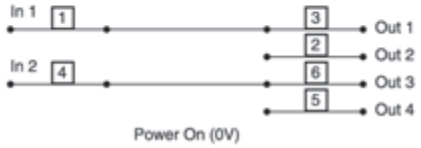

2 X 2 Bypass Fully Reversing

Possible Application

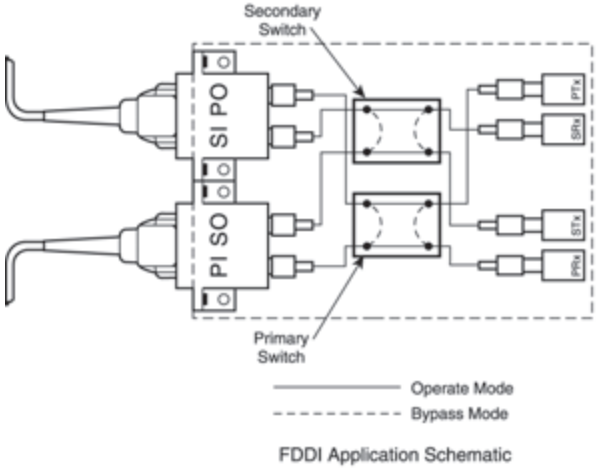

FDDI Application Schematic

Schematic

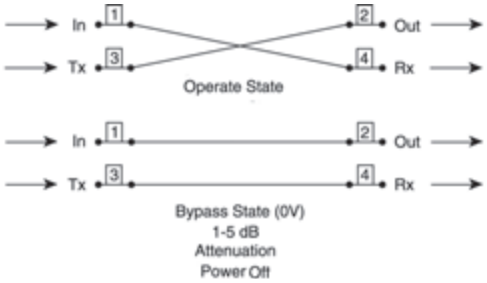

Catalog 1307895
Revised 3-06

www.tycoelectronics.com

Dimensions are in millimeters and inches unless otherwise specified. Values in brackets are standard equivalents.

Dimensions are shown for reference purposes only. Specifications subject to change.

USA: 1-800-522-6752
Canada: 1-905-470-4425
Mexico: 52-55-1106-0800
C. America: 57-1-254-4444

South America: 55-11-2103-6000
Hong Kong: 852-2735-1628
Japan: 81-44-844-8013
UK: 44-208-420-8341

Switches (Continued)

Multimode
1 x 2 SPDT Switch
Dual 1 x 2 DPDT Switch
2 x 2 Bypass Switch (Continued)

Dimensions

Switch	Fiber Leads Used
1x2 SPDT	1,2,3
Dual 1x2 DPDT	1,2,3,4,5,6
2x2 Bypass	1,2,3,4

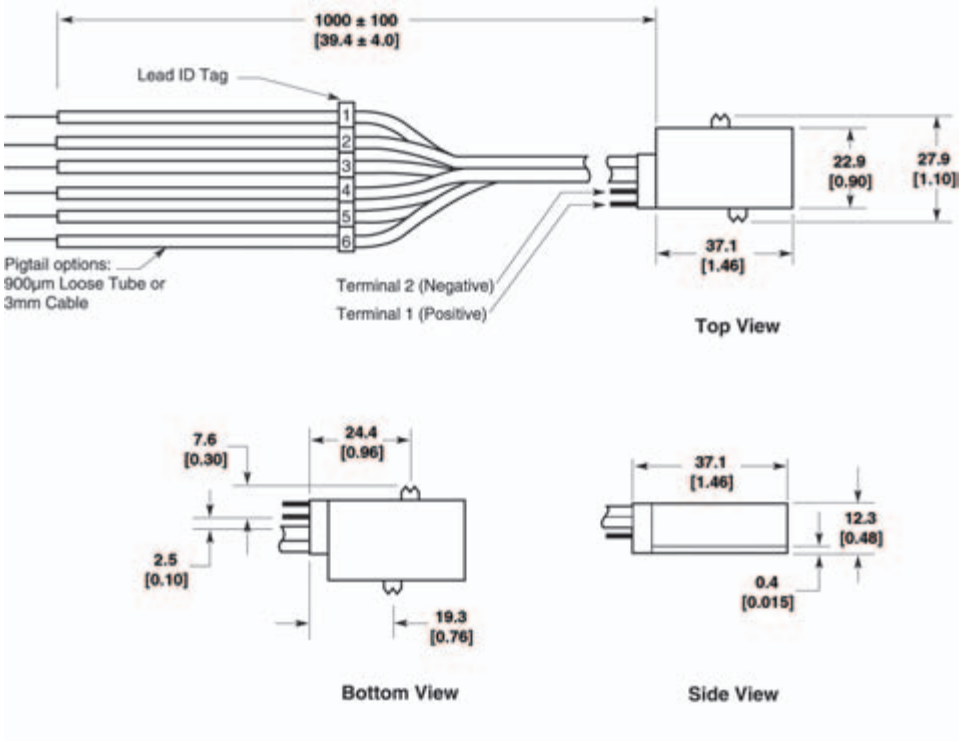

Part Number Information

Switch Type:	Electrical Interface	Fiber Connector	900um Loose Tube Cable		3mm Cable Jacket	
			Fiber Size 50/125	Fiber Size 62.5/125	Fiber Size 50/125	Fiber Size 62.5/125
1X2	Bent Pin	None	—	—	5099403-1	5099403-2
		ST Style	5099414-1	5099414-2	5099415-1	5099415-2
		SC Style	—	—	8-5099403-1	8-5099403-2
	Straight Pin	None	5099420-1	5099420-2	—	5099421-2
		ST Style	—	—	5099427-1	5099427-2
		SC Style	8-5099420-1	8-5099420-2	—	8-5099421-2
Dual 1X2	Bent Pin	None	5099973-1	5099973-2	5099974-1	5099974-2
		ST Style	—	—	—	—
		SC Style	8-5099973-1	8-5099973-2	8-5099974-1	8-5099974-2
	Straight Pin	None	5099979-1	5099979-2	—	—
		ST Style	5099981-1	5099981-2	5099982-1	5099982-2
		SC Style	8-5099979-1	8-5099979-2	—	—
2X2 Bypass	Bent Pin	None	—	—	5099405-1	5099405-2
		ST Style	5099416-1	5099416-2	5099417-1	5099417-2
		SC Style	—	—	8-5099405-1	8-5099405-2
	Straight Pin	None	—	—	5099423-1	5099423-2
		ST Style	—	—	5099429-1	5099429-2
		SC Style	—	—	8-5099423-1	8-5099423-2

Fiber Type:	50/125	62.5/125
	-1	-2

Note: Part Numbers are RoHS compliant except: ♦ Indicates non-RoHS compliant.

Catalog 1307895
Revised 3-06

www.tycoelectronics.com

Dimensions are in millimeters and inches unless otherwise specified. Values in brackets are standard equivalents.

Dimensions are shown for reference purposes only. Specifications subject to change.

USA: 1-800-522-6752
Canada: 1-905-470-4425
Mexico: 52-55-1106-0800
C. America: 57-1-254-4444

South America: 55-11-2103-6000
Hong Kong: 852-2735-1628
Japan: 81-44-844-8013
UK: 44-208-420-8341

Switches (Continued)

Multimode Bypass Switches

Product Facts

- Increases reliability of mission-critical network applications
- Low insertion loss — 1.8 dB typical, including connectors
- Meets ANSI FDDI power output specification of -20 dBm
- Choice of 62.5/125 µm, 50/125 µm
- Choice of FSD MIC, ST-style, or duplex SC connectors and ports
- Rack or panel-mount versions
- Compact size with all front-mounted connections to conserve space
- High-speed optical switching
- Simple to install



Tyco Electronics' Bypass Switch is a second-generation device that allows a dual-attach station to be bypassed without loss of ring integrity. The switch module contains two fully reversing optical bypass switches that direct the optical signals to the appropriate fiber according to signals on the device's electrical interface.

A spherical mirror, which is pivoted at high speeds between two stable positions, reflects light into specific fibers in either the operate or bypass state. Signal attenuation is very low on the network path. In the bypass state, the path from transmitter to receiver is attenuated to prevent receiver saturation. Holding the switches in the operating (non-bypass) state requires a 5-VDC, 160-mA power. Both switches return to the bypass state if the power is removed. Switching occurs in less than 10 ms.

The modules are easy to install between a dual-attached station and the ring. Pigtailed optical-fiber cables connect the switch module to the node, while the primary and secondary ring cables connect to the switch's A and B ports.

The electrical connection is supplied by one of three standard electrical interfaces. A status LED lights when the switch is in the operate state. The bypass switch can be either booth panel or rack mounted.

Singlemode Bypass Modules

Tyco Electronics offers Singlemode Bypass Modules designed to meet your optical path protection needs. For more information, please consult your local Tyco Electronics Sales Representative or call Tyco Electronics Product Information Center at 1-800-522-6752.

Catalog 1307895
Revised 3-06

www.tycoelectronics.com

Dimensions are in millimeters and inches unless otherwise specified. Values in brackets are standard equivalents.

Dimensions are shown for reference purposes only. Specifications subject to change.

USA: 1-800-522-6752
Canada: 1-905-470-4425
Mexico: 52-55-1106-0800
C. America: 57-1-254-4444

South America: 55-11-2103-6000
Hong Kong: 852-2735-1628
Japan: 81-44-844-8013
UK: 44-208-420-8341

Switches (Continued)

Multimode Bypass Switches
(Continued)

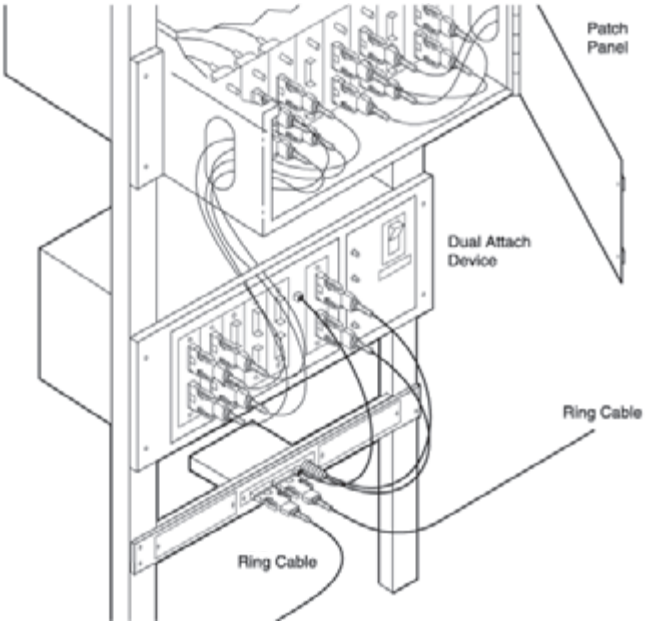

Switch Operation: Bypass and Operate States

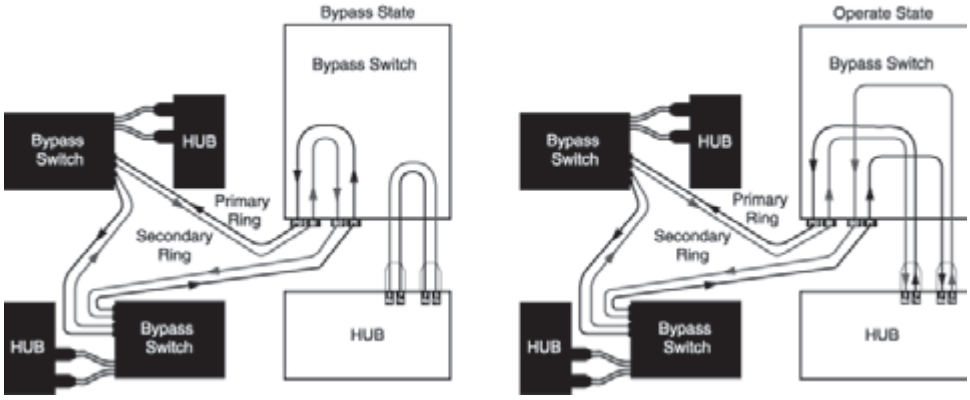

Insertion Loss

Operate Mode Powered	Short Launch
PI to PRx	1.8 dB Max.
SI to SRx	1.8 dB Max.
PTx to PO	1.8 db Max.
STx to SO	1.8 dB Max.
Operate Mode Not Powered	**Short Launch**
PI to PRx	1.8 dB Max.
SI to SRx	1.8 dB Max.
PTx to PO	5.0 dB Max.
STx to SO	5.0 dB Max.

Note: FOTP-34, Method A2.
IL values given for ST/SC options.

Specifications

Item	Value
Switching Speed	10 ms max.
Operating Wavelength	750 - 1450 nm
Crosstalk	≤45 dB (FOTP-42)
Switch Driver	5 V at 160 mA
Fiber Type	62.5/125-µm or 50/125-µm graded index
Operating Temperature	-10ºC to +65ºC (FOTP-3, Condition C2)
Storage Temperature	-30ºC to +70ºC (FOTP-3, Condition C2)
Durability	>1 million cycles
Weight	12 oz [340 g]

Catalog 1307895
Revised 3-06

www.tycoelectronics.com

Dimensions are in millimeters and inches unless otherwise specified. Values in brackets are standard equivalents.

Dimensions are shown for reference purposes only. Specifications subject to change.

USA: 1-800-522-6752
Canada: 1-905-470-4425
Mexico: 52-55-1106-0800
C. America: 57-1-254-4444

South America: 55-11-2103-6000
Hong Kong: 852-2735-1628
Japan: 81-44-844-8013
UK: 44-208-420-8341

Switches (Continued)

Multimode Bypass Switches (Continued)

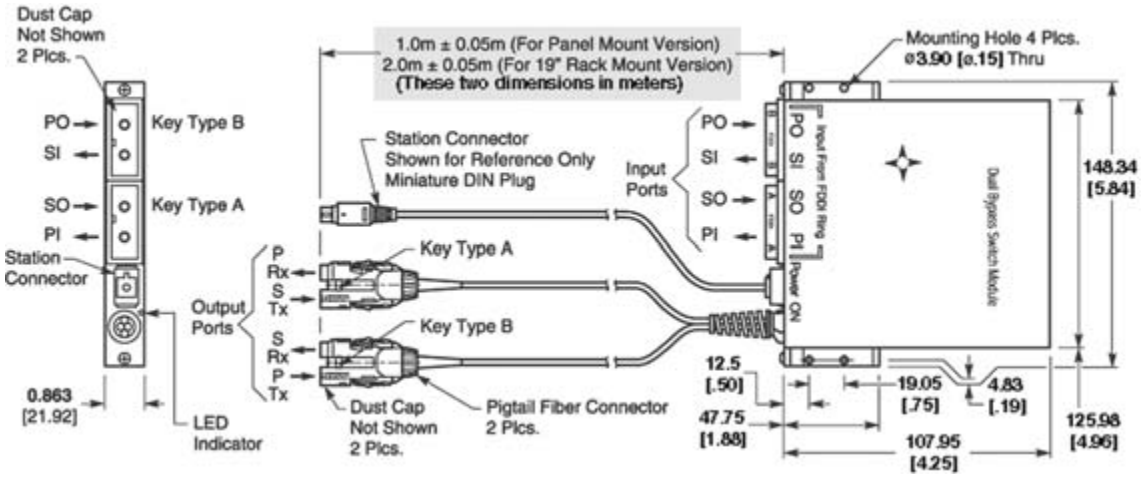

Switch Module Base Part Numbers

Input Port Interface	Mounting	Part Numbers				
		Optical Fiber Pigtails				
		62.5/125-µm Fiber			50/125-µm Fiber	
		FSD MIC	ST-style	SC	FSD MIC	SC
FSD MIC	Panel	5209161	5209162	5209163	5209167	—
	Rack	5209164	5209165	5209166	5209170	—
ST	Panel	—	5209174	5209175	—	—
	Rack	—	5209177	—	—	—
Duplex SC	Panel	—	—	5209187	—	5209193
	Rack	5209188	—	5209190	—	5209196

Note: Part Numbers are RoHS compliant except: ♦ Indicates non-RoHS compliant.

Switch Module Dash Numbers: Electrical Interface

Dash Number	Station Connector
-3	6-pos. Shielded Modular Plug
-4	6-pos. Shielded Miniature Circular DIN Plug
-6	4-pos. Modular Plug

Note: The electrical cable consists of an 8-position modular plug at one end for connecting to the switch and one of the connectors listed at the other end.

Ordering Information

Select the required switch module. To the base part number for the module, add the dash number for the electrical interface you require for the station connector. Example: 209163-3 is a switch with FSD MIC receptacles on ring ports, duplex SC connectors on the fiber pigtails, and a 6-position modular plug on the electrical cable.

For other connector interfaces, contact your local Tyco Electronics Sales Representative

Catalog 1307895
Revised 3-06
www.tycoelectronics.com

Dimensions are in millimeters and inches unless otherwise specified. Values in brackets are standard equivalents.

Dimensions are shown for reference purposes only. Specifications subject to change.

USA: 1-800-522-6752
Canada: 1-905-470-4425
Mexico: 52-55-1106-0800
C. America: 57-1-254-4444
South America: 55-11-2103-6000
Hong Kong: 852-2735-1628
Japan: 81-44-844-8013
UK: 44-208-420-8341

Switches (Continued)

Multimode Bypass Switches (Continued)

Station Connector and Pinouts

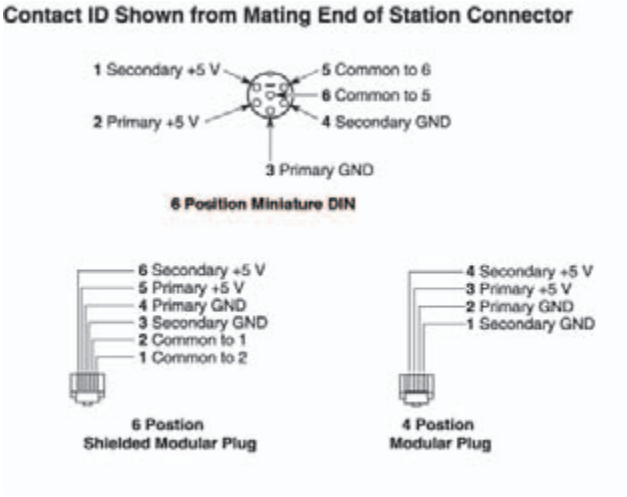

To Order the Electrical Interface Powercord Separately:

Part Number	Station Connector
5209503-1	6-pos. Modular Plug
5209504-1	6-pos. Shielded Miniature DIN Plug
5209506-1	4-pos. Modular Plug

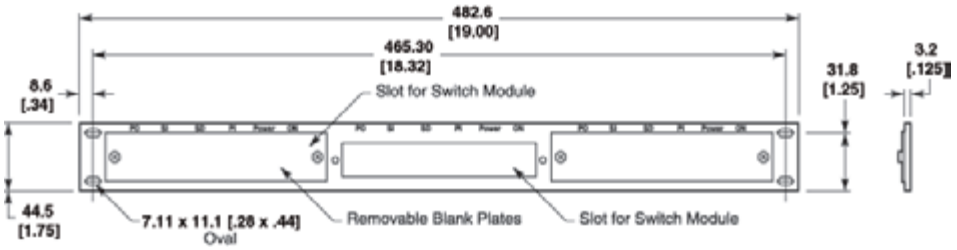

Rack-Mount Panel

Part Number: 209197-1 Mounts in a 19-inch rack and accepts up to three switch modules.

Note: Part Numbers are RoHS compliant except: ♦ Indicates non-RoHS compliant.

Catalog 1307895
Revised 3-06

www.tycoelectronics.com

Dimensions are in millimeters and inches unless otherwise specified. Values in brackets are standard equivalents.

Dimensions are shown for reference purposes only. Specifications subject to change.

USA: 1-800-522-6752
Canada: 1-905-470-4425
Mexico: 52-55-1106-0800
C. America: 57-1-254-4444

South America: 55-11-2103-6000
Hong Kong: 852-2735-1628
Japan: 81-44-844-8013
UK: 44-208-420-8341