DRAWING MADE IN THIRD ANGLE PROJECTION
THIS DRAWING IS UNPUBLISHED. RELEASED FOR PUBLICATION 19
© COPYRIGHT 19 BY AMP INCORPORATED. ALL INTERNATIONAL RIGHTS RESERVED.

DES	CHKD	REVISIONS				
AR	39	ZONE	LTR	DESCRIPTION	DATE	APPD
			0	RLSE PER NPR 4098 WAS 4021-5175	04/06/92	-

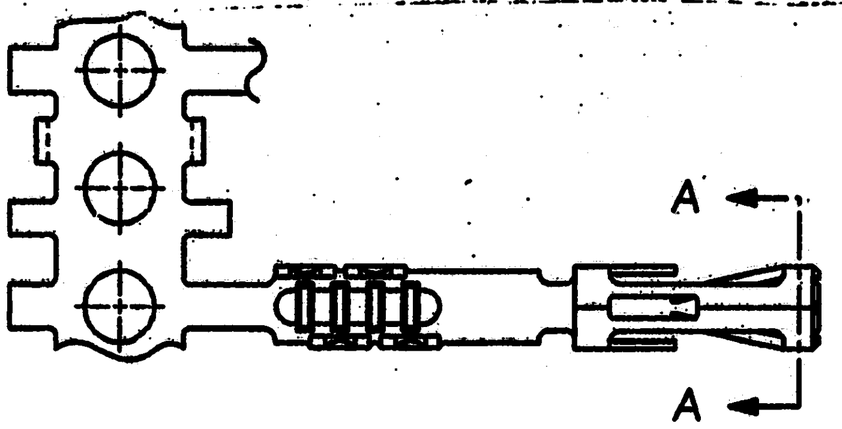

⚠1 2.54µm [.000100] MIN TIN-LEAD OVER 1.27µm [.000050] MIN NICKEL ON ENTIRE CONTACT.

2. MATING POST (.025±.001 SQUARE) LENGTH ACCEPTED:
SINGLE ROW HOUSINGS 5.59-8.20 [.220-.323]
DOUBLE ROW HOUSINGS 5.97-8.20 [.235-.323]

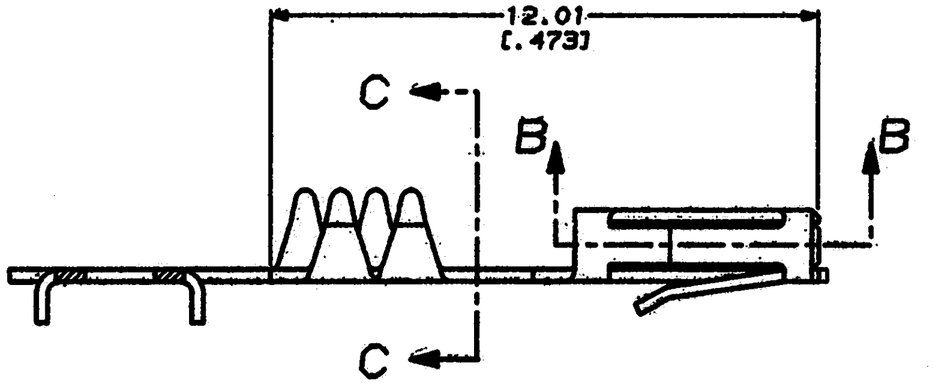

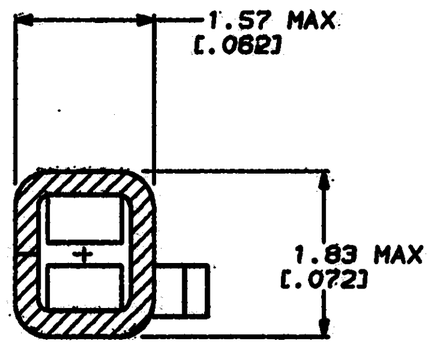

SECTION A-A
SCALE 20:1

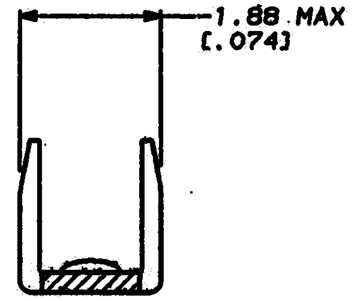

SECTION C-C
SCALE 20:1

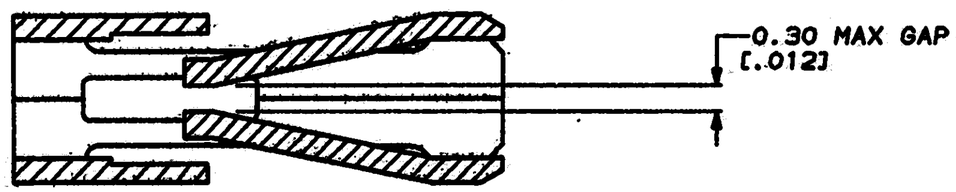

SECTION B-B
SCALE 20:1

487955-2
PART NO

DO NOT SCALE PRINT. UNLESS SPECIFIED DIMENSIONS IN mm [INCHES] TOLERANCES ON : 2 PLC DEC ± 0.13 [.005] 3 PLC DEC ± - ANGLES ± -	DR 04/06/92 C.OBERMAN CHK 4-7-92 R.STONE APPD 4-7-92 D.MILLER APPD 4-7-92 D.HOFFMAN	AMP Incorporated Harrisburg, PA 17105-3608
MATERIAL .010 THICK PHOSPHOR BRONZE	PRODUCT SPEC 108-9024	NAME CONTACT, RECEPTACLE, STANDARD PRESSURE, .100¢, FFC
FINISH ⚠1	APPLICATION SPEC 114-16015	SIZE C · CAGE CODE 00779 · DRAWING NO. 487955
	WEIGHT -	SCALE 10:1 · SHEET 1 OF 1

CUSTOMER DRAWING