B07D634BC2-0051 ✔ ACTIVE

CII

TE Internal #: 2-1617004-8

Full-Size Relays, Contact Arrangement 2 Form C, DPDT, 2 C/O, 26.5 VDC Input Voltage, 10A Contact Current Rating, 26.5VDC Coil Voltage Rating

View on TE.com >

Relays & Contactors > Relays > Mil-Aero Relays > Full-Size Relays



Contact Arrangement: **2 Form C, DPDT, 2 C/O**

Input Voltage: **26.5 VDC**

Contact Current Rating: **10 A**

Coil Voltage Rating: **26.5 VDC**

Coil Resistance: **300 Ω**

Features

Configuration Features

Contact Arrangement	2 Form C, DPDT, 2 C/O

Electrical Characteristics

Input Voltage	26.5 VDC
Contact Current Rating	10 A
Coil Voltage Rating	26.5 VDC
Coil Resistance	300 Ω
Coil Power Rating DC	2341 mW

Body Features

Enclosure Type	Hermetically Sealed

Termination Features

Relay Connection Type	PCB Termination
Terminal Configuration	PCB Pins

Mechanical Attachment

Product Mounting Feature Type	Mounting Brackets
Product Mount Type	Panel & Printed Circuit Board

Usage Conditions

Operating Temperature Range	-65 – 125 °C

Operation/Application

Vibration Resistance	20G's, 10 – 2000Hz
Actuating System	DC
Shock Resistance	100G's, 6ms
Coil Magnetic System	Non-Polarized, Monostable

Product Compliance

For compliance documentation, visit the product page on TE.com>

EU RoHS Directive 2011/65/EU	Not Compliant
EU ELV Directive 2000/53/EC	Not Compliant
China RoHS 2 Directive MIIT Order No 32, 2016	Restricted Materials Above Threshold
EU REACH Regulation (EC) No. 1907/2006	Current ECHA Candidate List: JUNE 2024 (241) Candidate List Declared Against: JAN 2022 (223) Does not contain REACH SVHC
Halogen Content	Low Halogen - Br, Cl, F, I < 900 ppm per homogenous material. Also BFR/CFR/PVC Free
Solder Process Capability	Not applicable for solder process capability

Product Compliance Disclaimer

This information is provided based on reasonable inquiry of our suppliers and represents our current actual knowledge based on the information they provided. This information is subject to change. The part numbers that TE has identified as EU RoHS compliant have a maximum concentration of 0.1% by weight in homogenous materials for lead, hexavalent chromium, mercury, PBB, PBDE, DBP, BBP, DEHP, DIBP, and 0.01% for cadmium, or qualify for an exemption to these limits as defined in the Annexes of Directive 2011/65/EU (RoHS2). Finished electrical and electronic equipment products will be CE marked as required by Directive 2011/65/EU. Components may not be CE marked. Additionally, the part numbers that TE has identified as EU ELV compliant have a maximum concentration of 0.1% by weight in homogenous materials for lead, hexavalent chromium, and mercury, and 0.01% for cadmium, or qualify for an exemption to these limits as defined in the Annexes of Directive 2000/53/EC (ELV). Regarding the REACH Regulation, the information TE provides on SVHC in articles for this part number is based on the latest European Chemicals Agency (ECHA) 'Guidance on requirements for substances in articles' posted at this URL: https://echa.europa.eu/guidance-documents/guidance-on-reach

Compatible Parts



TE Part # 5-1617785-6
FCA-410-1520L=M83536/15-020L

Customers Also Bought



TE Part #4117110001
HT-SCE-1/2-2.0-9



TE Part #1616068-9
K300B5C5=CONTACTOR 300 AMP SPST NO DB

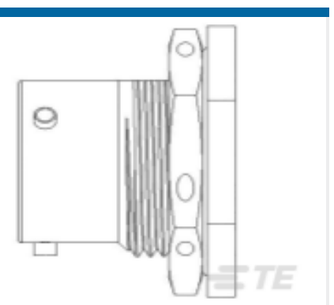

TE Part #YDL64H-14-15P8V001
HERM RECP

TE Part #YDBC54H-1419PWV001
HERM RECP

TE Part #2-1617028-2
HFW1102K05 = HFW 1/2 SIZE RELA

TE Part #015312392000-M
CD-375-500-0373

TE Part #1-1617811-1
FC-325-15=3PST-NO 25 AMP RELAY

TE Part #Y52508-10-5PNV0040
HERM RECP

TE Part #Y72340-09-35PAV005
HERM RECP

TE Part #Y72340-09-35PNV004
HERM RECP

Documents

CAD Files

3D PDF

3D

Customer View Model
ENG_CVM_CVM_2-1617004-8_R.2d_dxf.zip

English

Customer View Model
ENG_CVM_CVM_2-1617004-8_R.3d_igs.zip

English

Customer View Model

ENG_CVM_CVM_2-1617004-8_R.3d_stp.zip

English

By downloading the CAD file I accept and agree to the Terms and Conditions of use.

Datasheets & Catalog Pages

5-1773450-5_sec1_07

English

RELAY

English