D7, DH7, DHR7, DR7 Series, Rated up to 50 Amps, 115/200 VAC, 400 Hz

Product Facts

- 3PDT and 3PST NO
- Gasket sealed or Hermetically sealed
- Auxiliary contacts available
- Meets many requirements of MIL-PRF-6106



Performance Data

Electrical Characteristics

Contact Arrangement — 3PDT and 3PST NO

Rated Operating Voltage — 115/200 VAC, 400 Hz, 3 phase

Resistive Rating — 50 Amps

Inductive Rating — 50 Amps

Motor Rating — 30 Amps

Lamp Rating — 15 Amps

General Characteristics

Temperature Range — -55°C to +71°C

Operating Cycles (Life) at Rated Resistive Load, Min. — 50,000 cycles

Operating Cycles (Life) Mechanical, Min. — 100,000 cycles

Dielectric Strength —
All Circuits to Ground — 1,500 Vrms
Circuit to Circuit — 1,500 Vrms
Coil to Ground and Aux. Contacts — 1,000 Vrms

Insulation Resistance, Initial — 100 megohm min.

Altitude —
D7, DR7 — 50,000 ft
DH7, DHR7 — 80,000 ft

Weight, Max. — .94 to 1.20 lbs

Coil Characteristics

Duty Cycle —
VAC 400 Hz — AC Continuous (Type A & E, See diagram below)
Vdc — Continuous (Type B, See diagram below)
Vdc — Continuous with suppression (Type C & D, See diagram below)

Operating Voltage, Nom. —
VAC 400 Hz — 115 VAC
Vdc — 28 Vdc

Pickup Voltage @ 25°C, Max. —
VAC 400 Hz — 75 VAC
Vdc — 18 Vdc

Dropout Voltage @ 25°C, Max. —
VAC 400 Hz — 12 to 38 VAC
Vdc — 1 to 7 Vdc

Coil Resistance ±20% @ 25°C —
VAC 400 Hz — 505 Ohms
Vdc — 126 Ohms

Coil Current @ 25°C, Max. —
VAC 400 Hz — .065 Amp
Vdc — .28 Amp

Coil Type

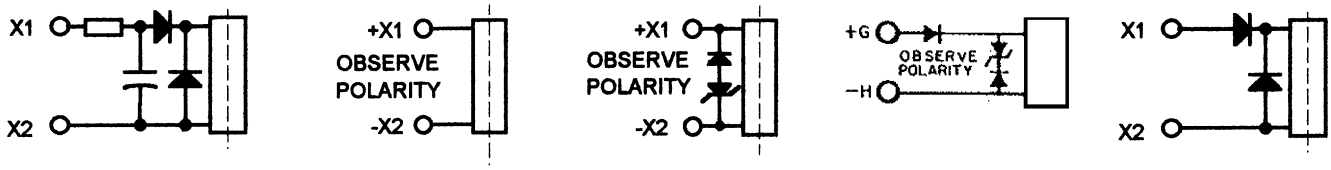

A — AC Continuous

B — Continuous

C — Continuous with Suppression

D — Continuous with Suppression

E — AC Continuous

For factory-direct application assistance, phone 419-521-9500 or fax 419-526-2749.

D7, DH7, DHR7, DR7 Series, Rated up to 50 Amps, 115/200 VAC, 400 Hz (Continued)

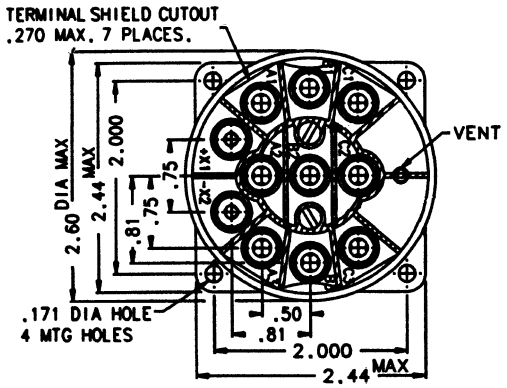

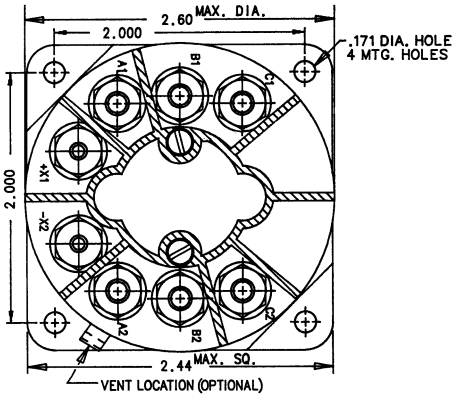

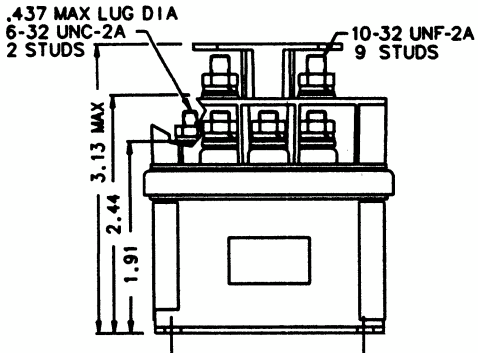

Mounting Style A

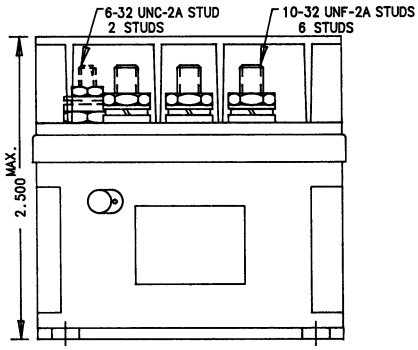

Mounting Style B

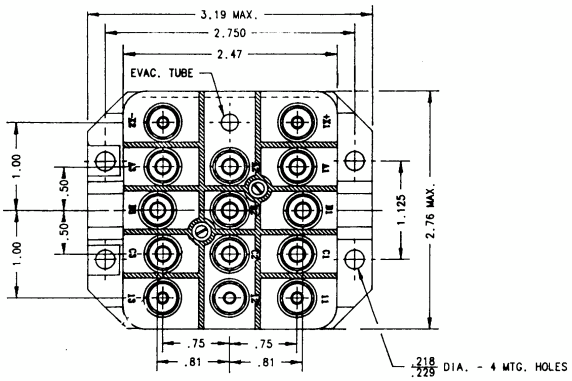

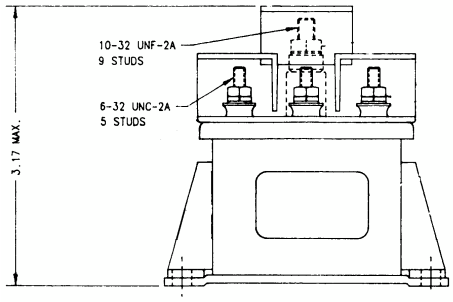

Mounting Style C

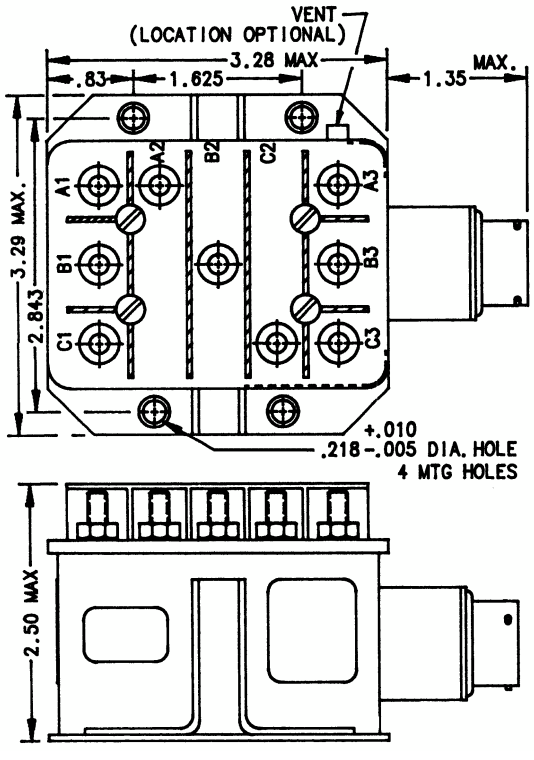

Mounting Style D

For factory-direct application assistance, phone 419-521-9500 or fax 419-526-2749.

D7, DH7, DHR7, DR7 Series, Rated up to 50 Amps, 115/200 VAC, 400 Hz (Continued)

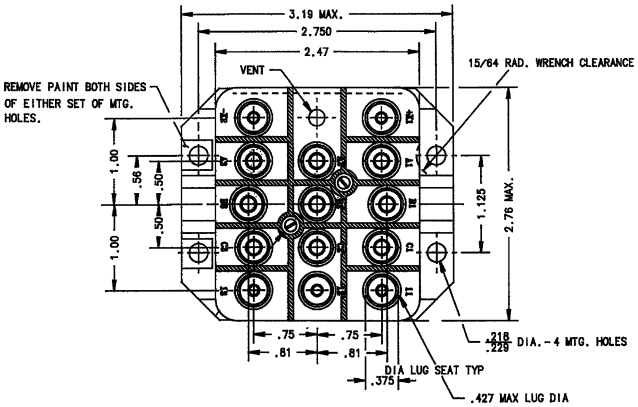

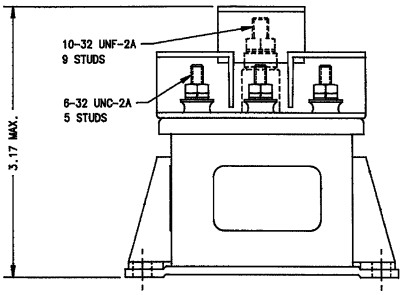

Mounting Style E

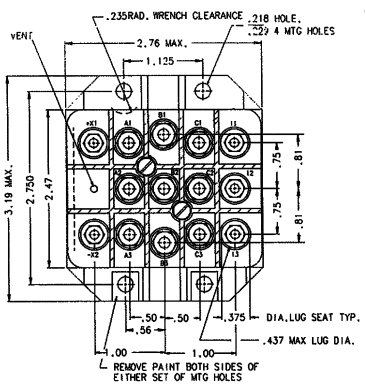

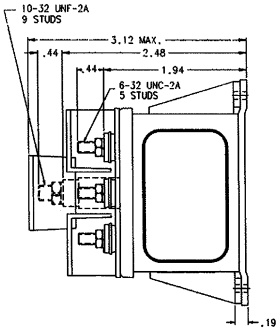

Mounting Style F

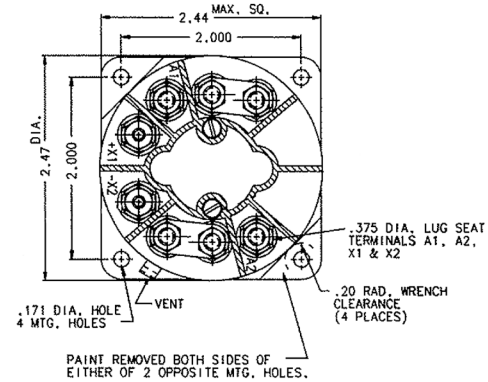

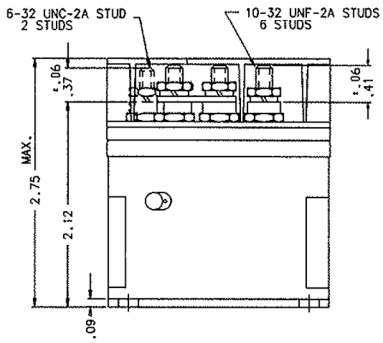

Mounting Style G

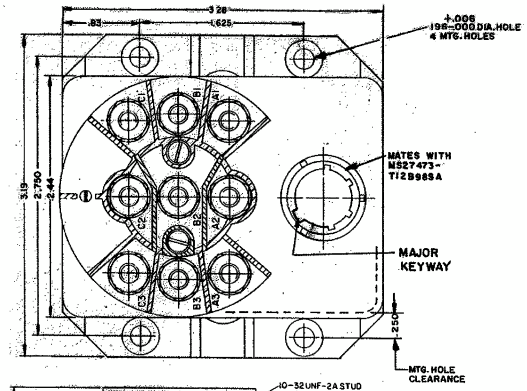

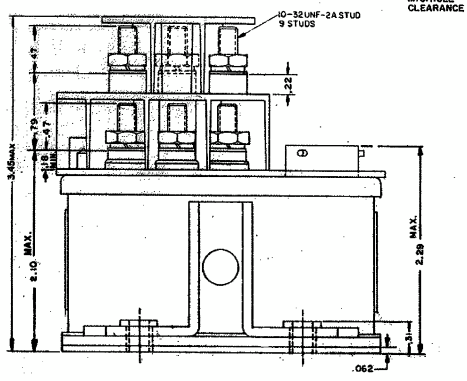

Mounting Style H

For factory-direct application assistance, phone 419-521-9500 or fax 419-526-2749.

D7, DH7, DHR7, DR7 Series, Rated up to 50 Amps, 115/200 VAC, 400 Hz (Continued)

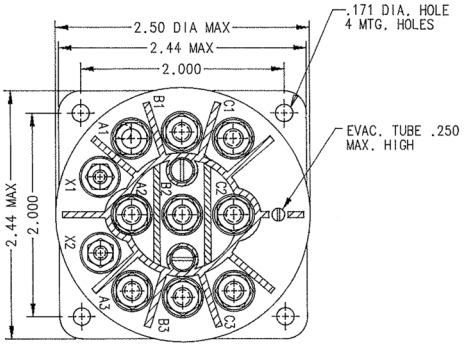

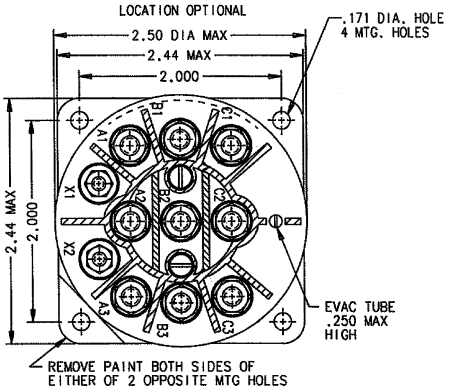

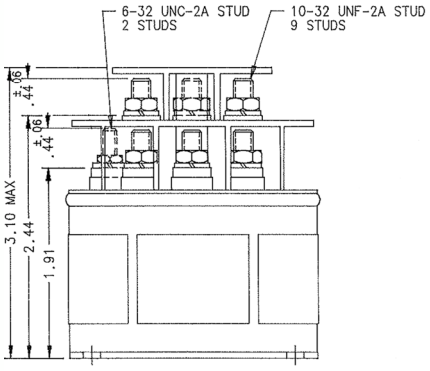

Mounting Style I

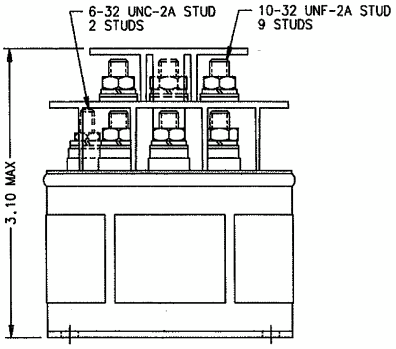

Mounting Style J

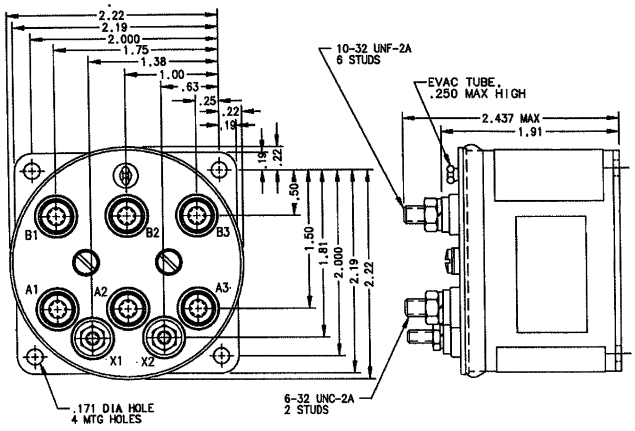

Mounting Style K

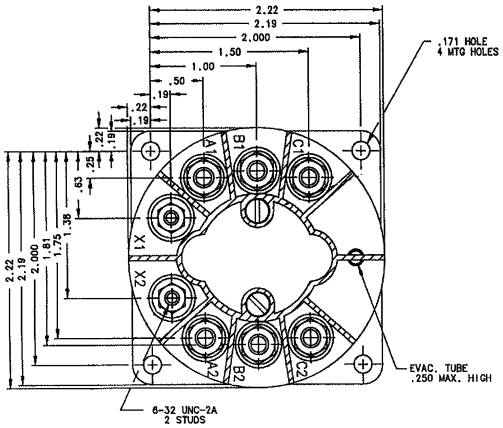

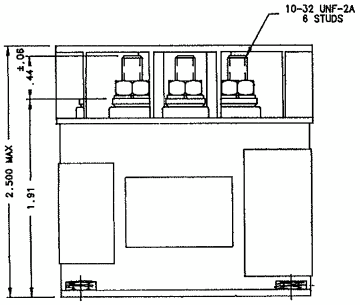

Mounting Style L

For factory-direct application assistance, phone 419-521-9500 or fax 419-526-2749.

D7, DH7, DHR7, DR7 Series, Rated up to 50 Amps, 115/200 VAC, 400 Hz (Continued)

Circuit Configurations (Consult factory for other available circuit configurations)

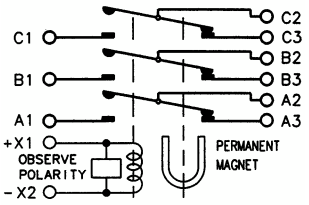

Circuit Configuration 1

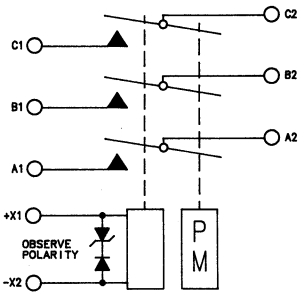

Circuit Configuration 2

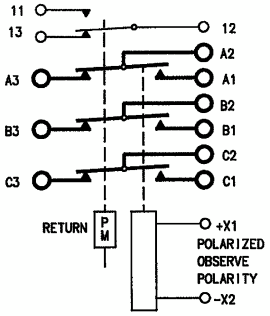

Circuit Configuration 3

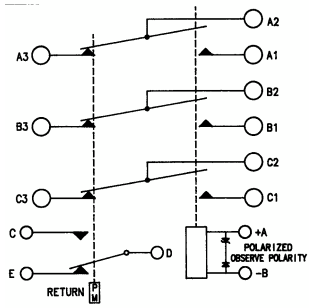

Circuit Configuration 4

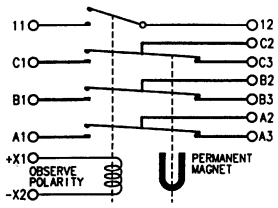

Circuit Configuration 5

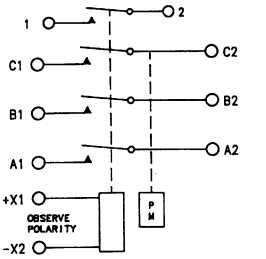

Circuit Configuration 6

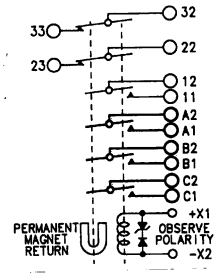

Circuit Configuration 7

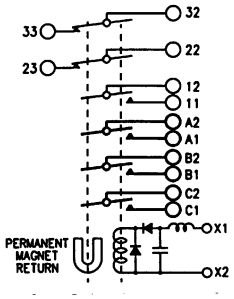

Circuit Configuration 8

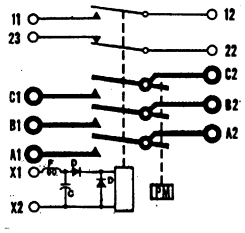

Circuit Configuration 9

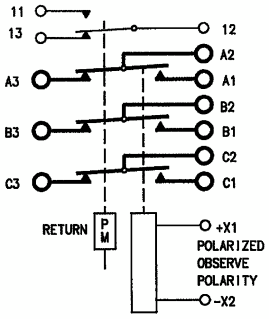

Circuit Configuration 10

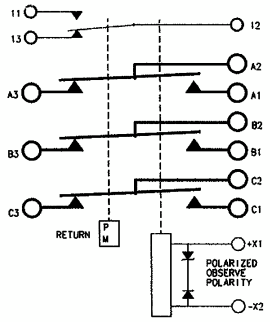

Circuit Configuration 11

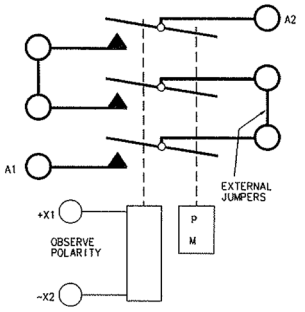

Circuit Configuration 12

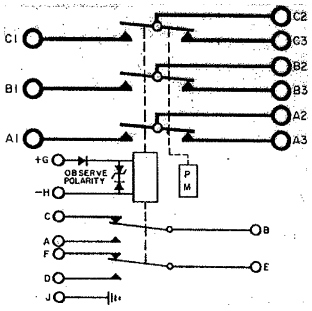

Circuit Configuration 13

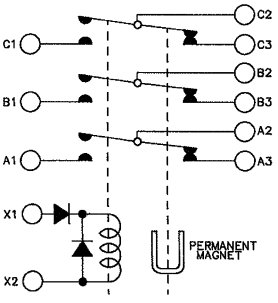

Circuit Configuration 14

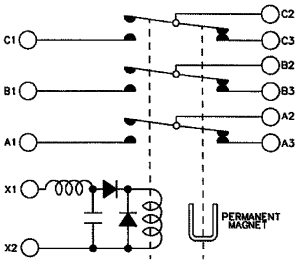

Circuit Configuration 15

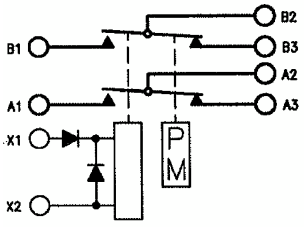

Circuit Configuration 16

For factory-direct application assistance, phone 419-521-9500 or fax 419-526-2749.

D7, DH7, DHR7, DR7 Series, Rated up to 50 Amps, 115/200 VAC, 400 Hz (Continued)

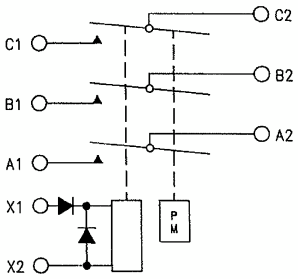

Circuit Configuration 17

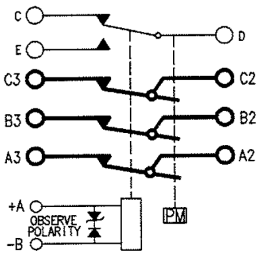

Circuit Configuration 18

HARTMAN Part Number	Construction Type	Mounting Style	Coil Type	Circuit Config.	TE Part Number
D-7BS	Gasket/Vented	A	C	1	1616036-1
D-7M	Gasket/Vented	B	C	2	1616016-2
D-7GR-2	Gasket/Vented	C	B	3	1616036-3
D-7GRZ	Gasket/Vented	D	C	4	1616036-5
DH-7BB	Hermetically Sealed	A	B	5	1616037-7
DH-7N	Hermetically Sealed	B	B	6	1616017-9
DH-7ZG-1	Hermetically Sealed	C	C	7	1-1616017-1
DHR-7ZG	Hermetically Sealed	C	A	8	1-1616017-2
DR-7VC	Hermetically Sealed	B	A	9	1616018-1
D-7GR	Gasket/Vented	E	B	10	1616036-2
D-7GR-3	Gasket/Vented	F	B	11	1616036-4
D-7MA	Gasket/Vented	G	B	12	1616016-3
D-7MM	Gasket/Vented	H	C	18	1616016-4
DH-7GR	Hermetically Sealed	E	C	11	1616037-9
DH-7ZAB	Hermetically Sealed	H	D	13	1-1616037-1
DHR-7B	Hermetically Sealed	I	E	14	1-1616037-6
DHR-7BE	Hermetically Sealed	J	A	15	1-1616037-7
DHR-7K	Hermetically Sealed	K	E	16	1616522-2
DHR-7M	Hermetically Sealed	L	E	17	1616518-2

For factory-direct application assistance, phone 419-521-9500 or fax 419-526-2749.