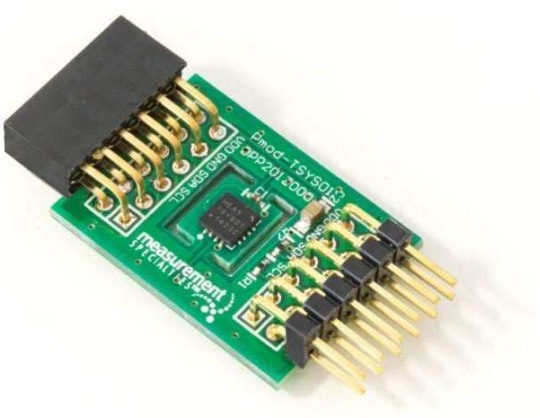

# TSYS01
# PERIPHERAL MODULE
## Digital Temperature Sensor

### General Description

The TSYS01 peripheral module provides the necessary hardware to interface the TSYS01 digital temperature sensor to any system that utilizes Pmod compatible expansion ports configurable for $I^2C$ communication. The TSYS01 sensor is a self-contained temperature sensor that is fully calibrated during manufacture. The sensor can operate from 2.2V to 3.6V. The TSYS01 has a low power stand-by mode for power-sensitive applications.

### Specifications

- Measures temperature from -40°C to 125°C
- $I^2C$ communication
- Fully calibrated
- Fast response time
- Very low power consumption

### Features

- 12-pin Pmod compatible connector
- $I^2C$ interface
- Secondary 12-pin connector allows daisy chain
- FPGA fabric available for download
- µC C code available for download
- 24/16 bit resolution for temperature
- Parameters stored on chip

## Performance

- -5°C to 50°C accuracy: 0.1°C
- -40°C to 125°C accuracy: 0.5°C
- Very low power consumption
- Operates from 2.2V to 3.6V
- Time constant –4 second  typical in air
- Fast conversion time – 8.22 mS typical

## Schematic

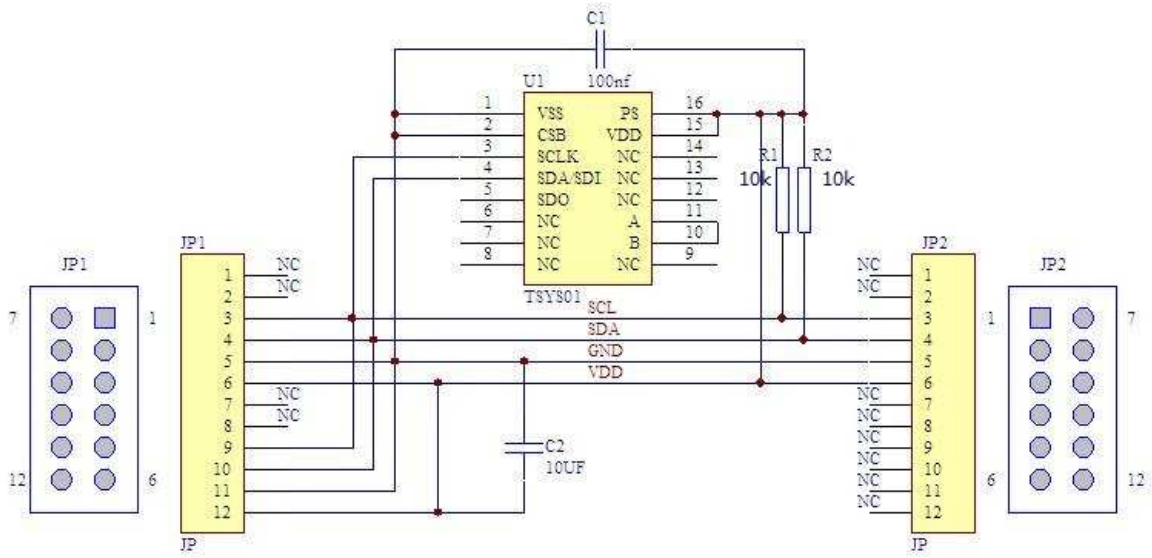

## Connector Pin Assignments ($1^2C$ Communications)

System Plug (Table 1)

| Connector J1 | | |
|---|---|---|
| **Pin No.** | **Signal** | **Description** |
| 1 | N/C | Not Connected |
| 2 | N/C | Not Connected |
| 3 | SCL | $I^2C$ Serial Clock |
| 4 | SDA | $I^2C$ Serial Data |
| 5 | GND | Ground |
| 6 | Vdd | Power Supply |
| 7 | N/C | Not Connected |
| 8 | N/C | Not Connected |
| 9 | SCL | $I^2C$ Serial Clock |
| 10 | SDA | $I^2C$ Serial Data |
| 11 | GND | Ground |
| 12 | Vdd | Power Supply |

Expansion Socket (Table 2)

| Connector J2 | | |
|---|---|---|
| **Pin No.** | **Signal** | **Description** |
| 1 | N/C | Not Connected |
| 2 | N/C | Not Connected |
| 3 | SCL | $I^2C$ Serial Clock |
| 4 | SDA | $I^2C$ Serial Data |
| 5 | GND | Ground |
| 6 | Vdd | Power Supply |
| 7 | N/C | Not Connected |
| 8 | N/C | Not Connected |
| 9 | N/C | Not Connected |
| 10 | N/C | Not Connected |
| 11 | N/C | Not Connected |
| 12 | N/C | Not Connected |

## Dimensions(mm)

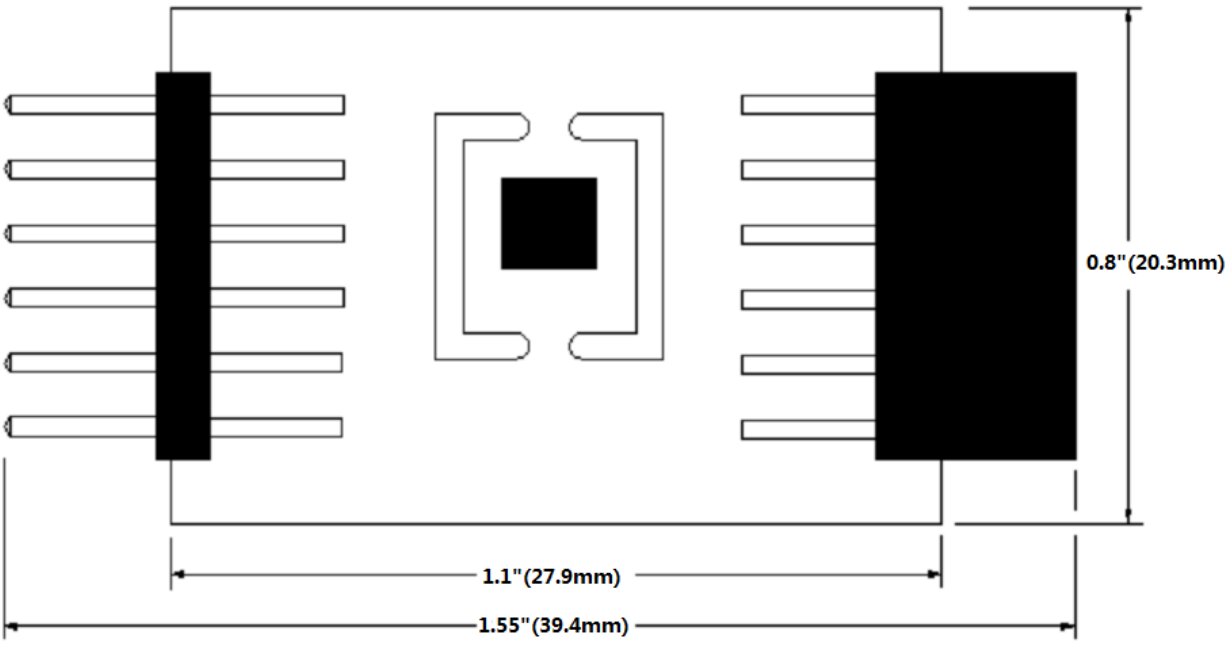

## Detailed Description

### I²C Interface

The peripheral module can interface to the host in one of two ways. It can plug directly into a Pmod-compatible port (configured for I²C) through connector J1, or in this case, other I²C boards can attach to the same I²C bus through connector J2.

### I²C Interface (Daisy Chaining Modules)

Alternatively, the peripheral module can connect to other I²C-based Pmod modules through the expansion J2 connector. Connector J1 provides connection of the module to the Pmod host. The pin assignments and functions adhere to the Pmod standard as shown in Table 1. The J2 connector allows the module to be connected through a daisy-chain from another I²C module and/or provide I²C and power connections to other I²C modules on the same bus. See Table 2.

### External Control Signals

The IC operates as an I²C slave using the standard 2 wire I²C connection scheme. The IC is controlled either by the host (through the Pmod connector). In cases where one or more of the SCL and SDA signals are driven from an external source, resistors R1, R2 provide pull-up. However, this also increases the apparent load to the external driving source. If the external source is *in*capable of driving these loads, they should be removed.

## Reference Material

- Refer to the TSYS01 data sheet for detailed information regarding operation of the IC: http://www.meas-spec.com/downloads/xxxxxxxxx.pdf
- The complete software sensor evaluation kit for ZEDBOARD is available at http://www.meas-spec.com/TBD/xxxxx.zip (TSYS01 ZedBoard Driver)
- The complete software sensor evaluation kit for MICROZED BOARD is available at http://www.meas-spec.com/TBD/xxxxx.zip (TSYS01 MicroZed Board Driver)
- The Boot.bin file of MicroZed Touch Screen Demo Kit for Digital Component Sensors at http://www.meas-spec.com/TBD/xxxxx.zip (MicroZed Touch Screen Demo)

## Ordering Information

| Description | Part Number |
|---|---|
| TSYS01 PERIPHERAL MODULE | DPP201Z000 |

**te.com/en/products/sensors.html**

TE Connectivity, TE Connectivity (logo) and Every Connection Counts are trademarks. All other logos, products and/or company names referred to herein might be trademarks of their respective owners.

The information given herein, including drawings, illustrations and schematics which are intended for illustration purposes only, is believed to be reliable. However, TE Connectivity makes no warranties as to its accuracy or completeness and disclaims any liability in connection with its use. TE Connectivity's obligations shall only be as set forth in TE Connectivity's Standard Terms and Conditions of Sale for this product and in no case will TE Connectivity be liable for any incidental, indirect or consequential damages arising out of the sale, resale, use or misuse of the product. Users of TE Connectivity products should make their own evaluation to determine the suitability of each such product for the specific application.

© 2015 TE Connectivity Ltd. family of companies All Rights Reserved.

**000000XX 03/15 Original**

PRODUCT SHEET

**Contact us:**

Measurement Specialties Inc – MEAS France
Impasse Jeanne Benozzi CS 83 163
31027 Toulouse Cedex 3, FRANCE
Tel:+33 (0)5 820.822.02 Fax:+33 (0)5.820.821.51
Sales: sales.tlse.fr@meas-spec.com
MEAS Website: http://www.meas-spec.com/DCS_TBD