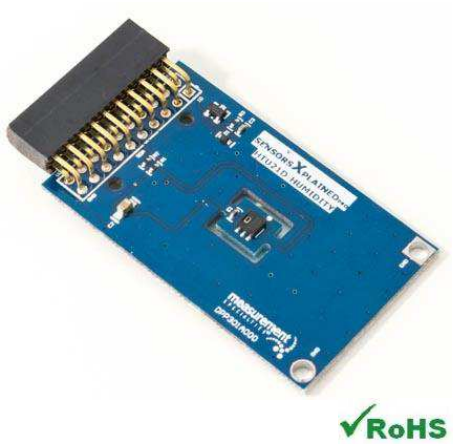

MEAS HTU21D XPLAINED PRO BOARD

Digital Humidity
Digital Component Sensor (DCS) Development Tools

The HTU21D Xplained Pro provides the necessary hardware to interface the HTU21D digital relative humidity and temperature sensor to any system that utilizes Xplained Pro compatible expansion ports configurable for I²C communication. The HTU21D sensor is a self-contained humidity and temperature sensor that is fully calibrated during manufacture. The sensor can operate from 1.5V to 3.6V, has selectable resolution, low battery detect, and checksum capability. The HTU21D has a low power stand-by mode for power-sensitive applications.

Refer to the HTU21D datasheet for detailed information regarding operation of the IC:

http://www.te.com/usa-en/product-CAT-HSC0004.html

Performance

- 0% to 100% relative humidity range
- -40°C to 125°C temperature range
- Very low power consumption
- Operates from 1.5V to 3.6V
- Fast response time – 5 seconds typical
- Built-in heater for fast recovery from saturation
- Recovers fully from condensation
- Fast conversion time – 14ms typical

Features

- 20-pin Xplained Pro compatible connector
- I²C interface
- Xplained Pro Hardware identification Chip
- Atmel Studio 6 Project available for download
- µC C code available for download
- Selectable 8-12 bit resolution for humidity
- Selectable 12-14 bit resolution for temperature

Specifications

- Measures relative humidity from 0% to 100%
- Measures temperature from -40°C to 125°C
- I²C communication
- Fully calibrated
- Fast response time
- Selectable resolution
- Very low power consumption

Schematic

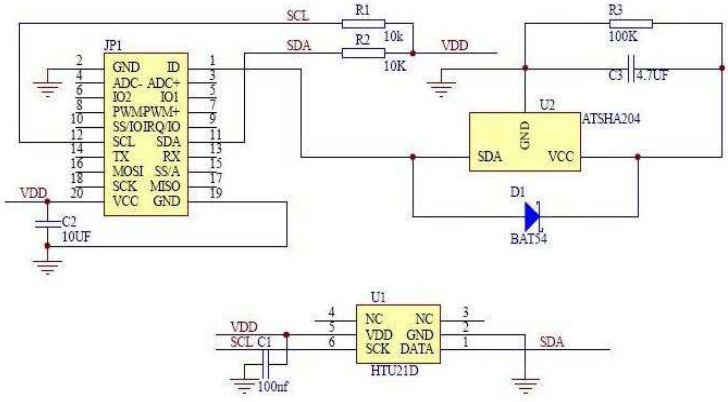

Connector Pin Assignments (I^2C Communications)

System Plug

Connector JP1					
Pin No.	**Signal**	**Description**	**Pin No.**	**Signal**	**Description**
1	ID	Hardware identification	11	SDA	TWI Serial Data
2	GND	Ground	12	SCL	TWI Serial Clock
3	N/C	Not Connected	13	N/C	Not Connected
4	N/C	Not Connected	14	N/C	Not Connected
5	N/C	Not Connected	15	N/C	Not Connected
6	N/C	Not Connected	16	N/C	Not Connected
7	N/C	Not Connected	17	N/C	Not Connected
8	N/C	Not Connected	18	N/C	Not Connected
9	N/C	Not Connected	19	GND	Ground
10	N/C	Not Connected	20	Vdd	Power Supply

Dimensions (mm)

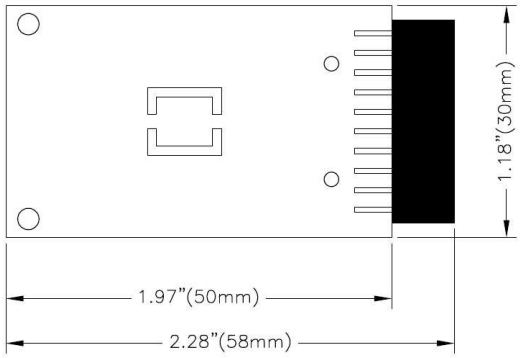

Detailed Description

I^2C Interface

The peripheral module can interface to the host being plugged directly into an Xplained Pro extension port (configured for I^2C) through connector JP1.

External Control Signals

The IC operates as an I^2C slave using the standard 2 wire I^2C connection scheme. The IC is controlled either by the host (through the Xplained Pro connector). In cases where one or more of the SCL and SDA signals are driven from an external source, 10k resistors R1, R2 provide pull-up. However, this also increases the apparent load to the external driving source. If the external source is not capable of driving these loads (10k), they should be removed.

Reference Materials

The complete software kit is available for download at: Link to HTU21D_CPROJ.zip

Drivers & Software

Detailed example software and drivers are available that execute directly without modification on a number of development boards that support an integrated or synthesized microprocessor. The download contains several source files intended to accelerate customer evaluation and design. The source code is written in standard ANSI C format, and all development documentation including theory/operation, register description, and function prototypes are documented in the interface file.

Functions Summary

Enumerations	

enum	**htu21_i2c_master_mode** {
	htu21_i2c_hold,
	htu21_i2c_no_hold
	}

enum	**htu21_status** {
	htu21_status_ok, **htu21_status_no_i2c_acknowledge**,
	htu21_status_i2c_transfer_error, **htu21_status_crc_error**
	}

enum	**htu21_resolution** {
	htu21_resolution_t_14b_rh_12b = 0, **htu21_resolution_t_12b_rh_8b**,
	htu21_resolution_t_13b_rh_10b, **htu21_resolution_t_11b_rh_11b**
	}

enum	**htu21_battery_status** { **htu21_battery_ok**, **htu21_battery_low** }
enum	**htu21_heater_status** { **htu21_heater_off**, **htu21_heater_on** }
Functions	
void	**htu21_init** (void)
	Configures the SERCOM I2C master to be used with the HTU21 device.
bool	**htu21_is_connected** (void)
	Reset the HTU21 device.
enum htu21_status	**htu21_reset** (void)
	Reset the HTU21 device.
enum htu21_status	**htu21_read_serial_number** (uint64_t *)
	Reads the htu21 serial number.
enum htu21_status	**htu21_set_resolution** (enum htu21_resolution)
	Set temperature and humidity ADC resolution.
void	**htu21_set_i2c_master_mode** (enum htu21_i2c_master_mode)
	Set I2C master mode. This determines whether the program will hold while ADC is accessed or will wait some time.
enum htu21_status	**htu21_read_temperature_and_relative_humidity** (float *, float *)
	Reads the relative humidity value.
enum htu21_status	**htu21_get_battery_status** (enum htu21_battery_status *)
	Provide battery status.
enum htu21_status	**htu21_enable_heater** (void)
	Enable heater.
enum htu21_status	**htu21_disable_heater** (void)
	Disable heater.
enum htu21_status	**htu21_get_heater_status** (enum htu21_heater_status *)
	Get heater status.
float	**htu21_compute_compensated_humidity** (float, float)
	Returns result of compensated humidity.
float	**htu21_compute_dew_point** (float, float)
	Returns the computed dew point.

Project Setup

This project is based on ATSAMD20J18 board with Measurement Specialties Xplained Pro extension board connected to EXT1 pad as shown on figure below.

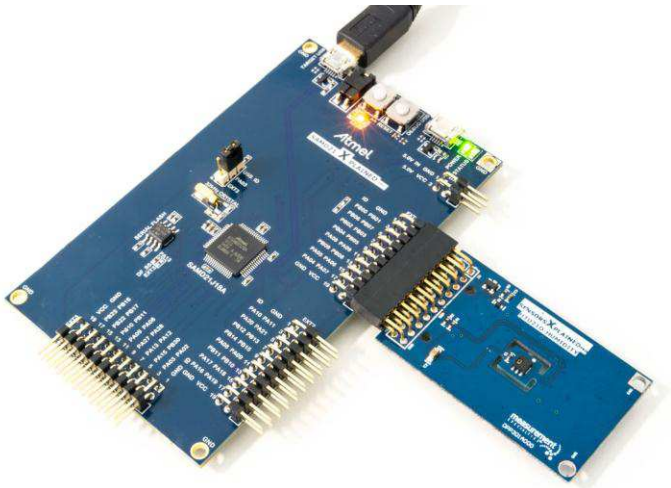

Running the Application

1. Download the HTU21D Xplained Pro example package on TE Website
2. Decompress the archive file
3. Open the .cproj project file with Atmel Studio 6
4. You will now be able to build the HTU21D example project -
5. Finally, run the build result on your Xplained Pro Board -

Application Code

This section is intended to provide a basic example of functionality.

```
/**
 * \file main.c
 *
 * \brief HTU21 Temperature & Humidity monitoring application file
 *
 * Copyright (c) 2014 Measurement Specialties. All rights reserved.
 *
 */

#include <asf.h>

uint64_t serial;
float temperature;
float relative_humidity;
float compensated_humidity;
float dew_point;
enum htu21_heater_status heater;

int main (void)
```

```
{
        enum htu21_status status;
        float last_temperature = 0;
        float variation = 0;
        uint8_t n=0;

        system_init();
        delay_init();

        // Configure device and enable
        htu21_init();

        if( !htu21_is_connected() )
                return -1;

        // Reset HTU21
        status = htu21_reset();
        if( status != htu21_status_ok)
                return -1;

        // Read serial number
        status = htu21_read_serial_number(&serial);
        if( status != htu21_status_ok)
                return -1;

        // Configure resolution
        status = htu21_set_resolution(htu21_resolution_t_12b_rh_8b);
        if( status != htu21_status_ok)
                return -1;

        // Monitor temperature every 500ms
        while (1) {

                // Enable heater for 10s
                if( (n==10) ) {
                        status = htu21_enable_heater();
                        if( status != htu21_status_ok)
                                return -1;
                }
                // Disable heater after 20s
                if( (n==20) ) {
                        status = htu21_disable_heater();
                        if( status != htu21_status_ok)
                                return -1;
                }

                // Check heater status
                status = htu21_get_heater_status(&heater);
                if( status != htu21_status_ok)
```

```
                return -1;

        // Alternate between w and w/o hold temperature read
        if( n&1 )
                htu21_set_i2c_master_mode(htu21_i2c_no_hold);
        else
                htu21_set_i2c_master_mode(htu21_i2c_hold);

        status = htu21_read_temperature_and_relative_humidity(&temperature, &relative_humidity);
        if( status != htu21_status_ok)
                return -1;

        compensated_humidity = htu21_compute_compensated_humidity(temperature,relative_humidity);
        dew_point = htu21_compute_dew_point(temperature,relative_humidity);

        variation += temperature - last_temperature;

        // Look for significant temperature variation
        if (  variation >= 0.5 ) {
                // Yes, so turn LED on.
                port_pin_set_output_level(LED_0_PIN, LED_0_ACTIVE);
                variation = 0;
                } else if ( variation <= -0.5 ) {
                // No, so turn LED off.
                port_pin_set_output_level(LED_0_PIN, LED_0_INACTIVE);
                variation = 0;
        }

        delay_ms(500);
        last_temperature = temperature;
        n++;
        if(n==50) n=0;
    }

    return 0;
}
```

Ordering Information

Description	Part Number
MEAS HTU21D XPLAINED PRO BOARD	DPP301A000

Permission is hereby granted, free of charge, to any person obtaining a copy of this software and associated documentation files (the "Software"), to deal in the Software without restriction, including without limitation the rights to use, copy, modify, merge, publish, distribute, sublicense, and/or sell copies of the Software, and to permit persons to whom the Software is furnished to do so, subject to the following conditions:
The above copyright notice and this permission notice shall be included in all copies or substantial portions of the Software.

THE SOFTWARE IS PROVIDED "AS IS", WITHOUT WARRANTY OF ANY KIND, EXPRESS OR IMPLIED, INCLUDING BUT NOT LIMITED TO THE WARRANTIES OF MERCHANTABILITY, FITNESS FOR A PARTICULAR PURPOSE AND NONINFRINGEMENT. IN NO EVENT SHALL THE AUTHORS OR COPYRIGHT HOLDERS BE LIABLE FOR ANY CLAIM, DAMAGES OR OTHER LIABILITY, WHETHER IN AN ACTION OF CONTRACT, TORT OR OTHERWISE, ARISING FROM, OUT OF OR IN CONNECTION WITH THE SOFTWARE OR THE USE OR OTHER DEALINGS IN THE SOFTWARE.

te.com/sensorsolutions

Measurement Specialties, Inc., a TE Connectivity company.

MEAS, Measurement Specialties (logo), TE Connectivity and TE connectivity (logo) are trademarks. All other logos, products and/or company names referred to herein might be trademarks of their respective owners.

The information given herein, including drawings, illustrations and schematics which are intended for illustration purposes only, is believed to be reliable. However, TE Connectivity makes no warranties as to its accuracy or completeness and disclaims any liability in connection with its use. TE Connectivity's obligations shall only be as set forth in TE Connectivity's Standard Terms and Conditions of Sale for this product and in no case will TE Connectivity be liable for any incidental, indirect or consequential damages arising out of the sale, resale, use or misuse of the product. Users of TE Connectivity products should make their own evaluation to determine the suitability of each such product for the specific application.

© 2016 TE Connectivity Ltd. family of companies All Rights Reserved.

PRODUCT SHEET

MEAS France SAS,
a TE Connectivity company.
Tel:+33 (0) 800-440-5100
Email: customercare.tlse@te.com