

TRICAN HTD2800

Digital Combination Sensor Module

- **Combination sensor for relative humidity, temperature and pressure measurement**
- **Three different power supplies available: 5V, 12V, or 24V**
- **Optimized design for high RH, high T°C environment**
- **Digital output as per J1939, CAN2.0**
- **Rugged, automotive-grade sensor**
- **High resistance to chemicals**
- **Customizable CAN frame**
- **Optional output for NOx humidity correction factor**

The TRICAN HTD2800 digital combination sensor provides output signals for relative humidity, temperature and pressure from a single device. The highly rugged and reliable automotive-grade design of the TRICAN is suited for automotive, truck/bus and fuel cell applications where performance is key.

The TRICAN is optimized to provide accurate measurements and fast response times for systems where repeated long-term immersion in high humidity and high temperature environments is required. With measurements delivered as a digital output on a CAN bus, the TRICAN sensor provides exceptional value, proven reliability and accurate performance from a brand you can trust.

FEATURES

- Power supply 5V, 12V or 24V
- Digital output on a CAN bus
- Rugged construction for harsh environments with proven reliability and accurate performance
- Fast response time even in saturated humidity environment

APPLICATIONS

- Low power engine and fuel cell monitoring
- High humidity and high temperature environments
- Applications with signal noise and interference

PERFORMANCE SPECS

MAXIMUM RATINGS

Ratings	Symbol	Value	Unit
Storage Temperature	Tstg	-40 to +125	°C
Humidity Operating Range	RH	0 to 100	%RH
Temperature Operating Range*	Ta	-40 to +105	°C
Max Pressure (Burst)	Pabs	130	kPa

*** At the tip of the sensor**

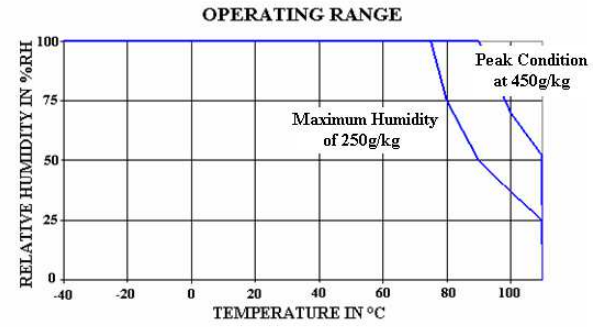

Peak conditions: less than 10% of the operating

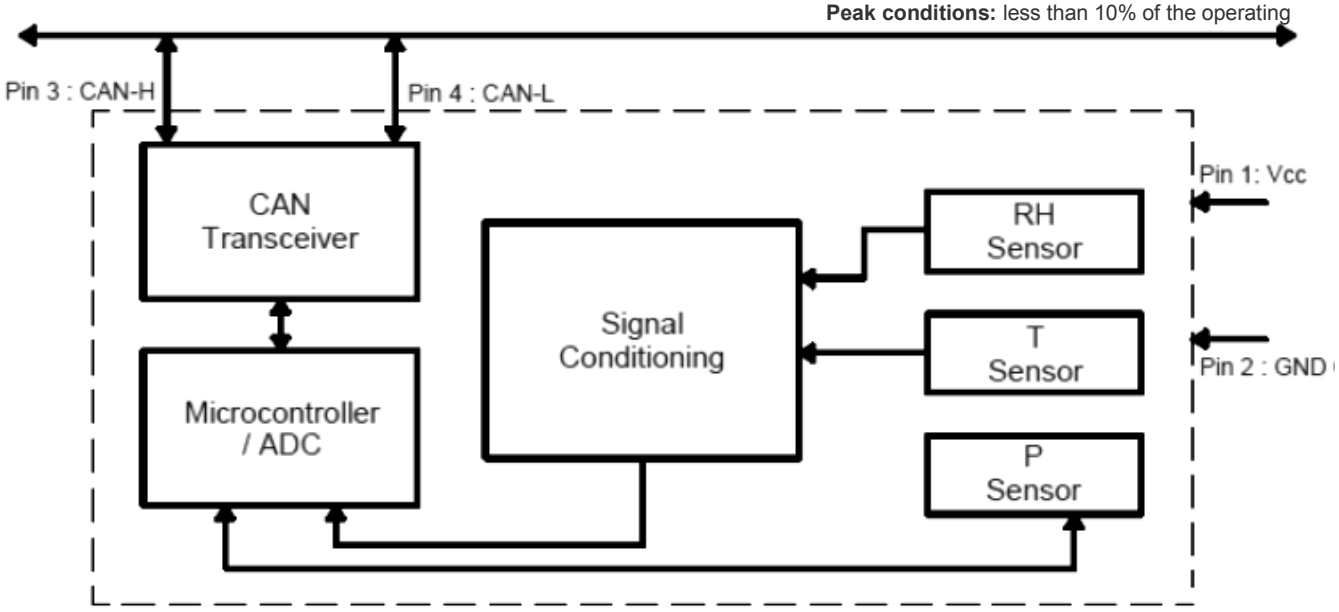

BLOCK DIAGRAM

CHARACTERISTICS

(@T=23°C)

Electrical Characteristics	Symbol	Min	Typ	Max	Unit
Voltage supply (Vbatt)	V	4.5 8 8	5 (At 5V) 12 (At 12V) 24 (At 24V)	5.5 32 32	VDC
Current consumption	mA	- - -	10 (At 5V) 15 (At 12V) 20 (At 24V)	130 100 104	mA
Sink current capability	mA	-	150	-	mA

CAN Bus Timing	Symbol	Min	Typ	Max	Unit
Bit time	µs	3.999	4	4.001	µs
CAN_H CAN_l slew rate	V/µs		7		V/µs

CAN_H & CANL limiting values	Symbol	Min	Typ	Max	Unit
DC voltage at CAN_L		-36		+36	V
DC voltage at CAN_H		-36		+36	V
Transient voltage on CAN_H & CAN_L		-200		+200	V

DC Bus Receiver*	Symbol	Min	Typ	Max	Unit
Differential input voltage (recessive)		-1.0		+0.5	V
Differential input voltage (dominant)		0.9		5.0	V
Differential input hysteresis		-	150	-	mV
CAN_H, CAN_L input resistance		5		25	Kohm
Differential input resistance		20		100	Kohm

* (Transceiver Vcc 4,5 to 5,5V ; RL = 60 ohm)

Humidity Characteristics	Symbol	Min	Typ	Max	Unit
Humidity Measuring Range	RH	0		100	%RH
Relative Humidity Accuracy (10% to 95%RH)			±3	±5	%RH
Relative humidity Resolution			0.4		%RH
Time Constant (at 63% of signal) 33%RH to 75%RH (1)	τ		5	10	s
Humidity hysteresis			±1		%RH
Time Constant (at 63% of signal) 33%RH to 75%RH (1)	τ		5	10	s
Long term stability			±0.5		%RH /Yr

Pressure	Symbol	Min	Typ	Max	Unit
Absolute pressure measuring range	kPa	1	-	250	kPa
Pressure measuring range with full accuracy guaranteed	kPa	30		130	kPa
Pressure accuracy			±1	±1.5	%FS
Pressure resolution			±0.5		kPa
Time Constant	τ		1		s
Long term stability			±0.5		kPa /Yr

Temperature Characteristics	Symbol	Min	Typ	Max	Unit
Temperature measuring range	T_a	-40		105	°C
Temperature accuracy			±0.5	±1.5	°C
Time Constant (1)	τ		10		S
Long term stability			±0 .3		°C/Yr

(1) At 2m/s air flow

CAN BUS INTERFACE

The system is J1939 Standard compliant. The system delivers temperature (SPN 1172), inlet pressure (SPN 1176), relative humidity (SPN 354) and Specific Humidity (SPN4490).

Identifier, transmission repetition rate, data length, ranges, and resolutions are defined by J1939 or specified by customer. Optional and customizable output for Dew point through internal calculation in accordance with EPA methodology is also available.

CAN 2.0B/J1939 FRAME DESCRIPTION

CAN 2.0B FRAME

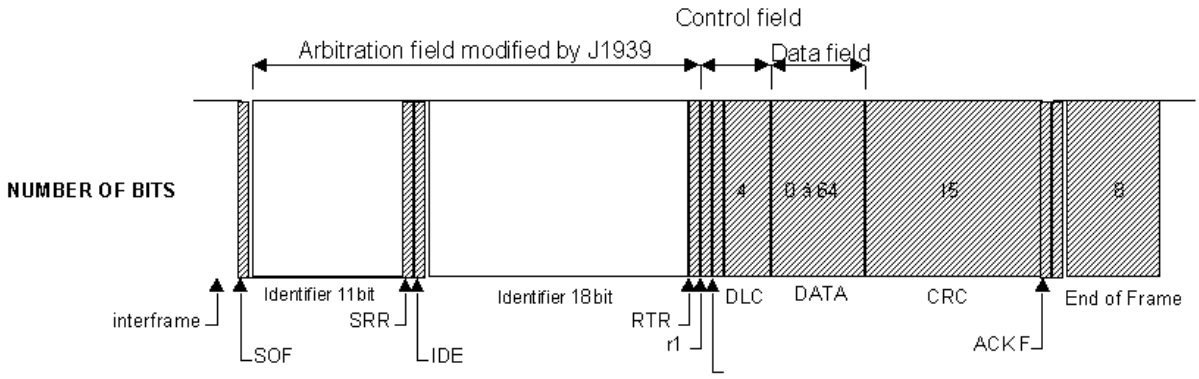

ARBITRATION / IDENTIFICATION FIELD

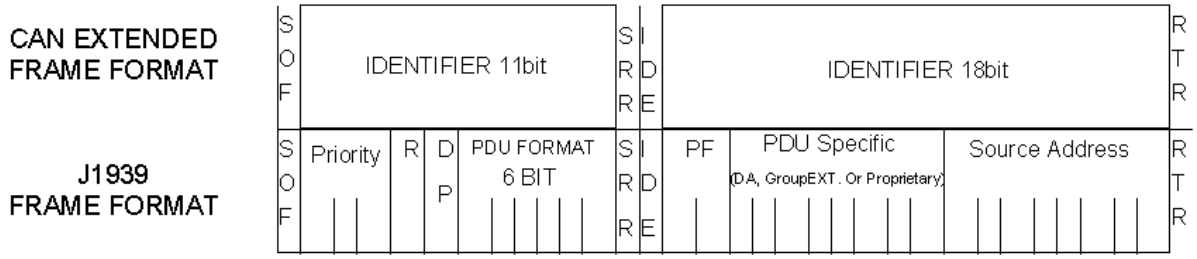

TRICAN HTD2800P1B11C6 STANDARD SPN

Inlet pressure	SPN 1176	Data length	2 byte
		Resolution	0,1KPa/bit gain, -250 KPa offset
		Data range	-250kPa to 251,99 kPa
Relative humidity	SPN 354	Data length	1byte
		Resolution	0.4%RH/bit gain, 0%RH offset
		Data range	0 to 100%RH
Specific humidity	SPN 4490	Data length	2 byte
		Resolution	0.01 g/kg, 0 g/kg offset
		Data range	0 to 642.55 g/kg
Air inlet temperature	SPN 1172	Data length	2 byte
		Resolution	0,03125°C/bit gain, -273°C offset
		Data range	-273 to1735°C

SELF DIAGNOSTIC CAPABILITES

Optional and customizable diagnostic byte can be implemented

- Pressure failure sensor (no communication or internal CRC issues)
- Pressure failure sensor (out of range issue)
- Temperature sensor circuit - voltage above normal
- Temperature sensor circuit - voltage below normal
- Humidity sensor circuit - voltage above normal
- Humidity sensor circuit - voltage below normal
- Sensor controller over temperature conditions (105°C)
- SH internal computation / calculation out of range or wrong CRC value

SAE J1939-21 REQUEST

Optional and customizable answers to SAE J1939-21 request can be implemented

- Address claim (PGN 60928)
- Software identification (PGN 65242)
- Calibration information DM19 (PGN 54016)
- Status code message (PGN TBD)

CONNECTOR CHARACTERISTICS

HTD2800P1B11C6

Connector Type: Customizable upon request

Bosch mating connector: 1 928 403 736
Recommended contacts: 1 928 498 054

Signal	Pin
VCC	1
GND	2
CANH	3
CANL	4

Pin contact

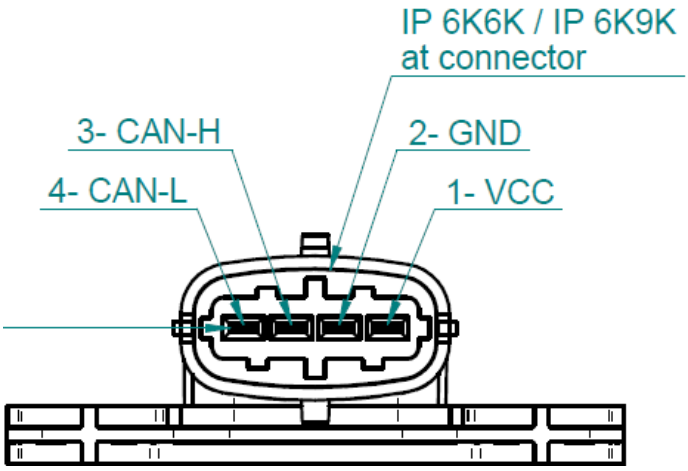

MECHANICAL CHARACTERISTICS

Housing B11C6

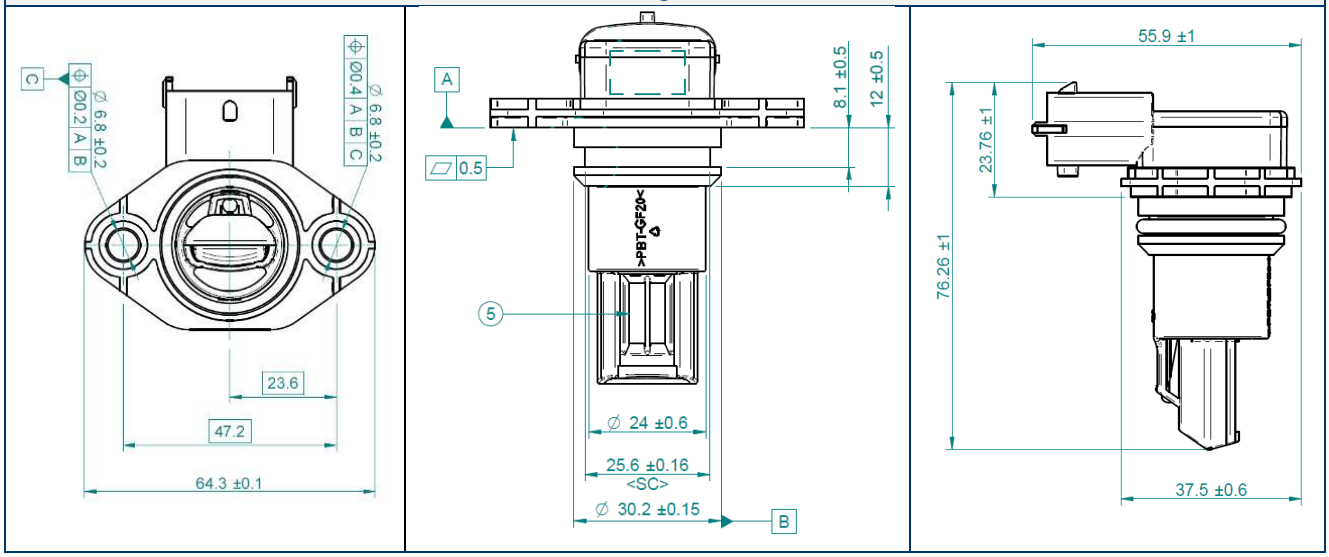

Recommended Screw Mounting: M6; Typical tightening torque: 12 N.m ; Maximum tightening torque: 17 N.m

RESISTANCE TO PHYSICAL AND CHEMICAL STRESSES

- TRICAN HTD2800P1B11C6 meets rigorous internal testing requirements around vibration, mechanical and thermal shock, storage, high and low temperature, humidity and pressure, ESD and EMC.
- Additional tests under harsh chemical conditions demonstrate good operation in presence of salt atmosphere, SO_2 (0.5%), H_2S (0.5%), O_3, NOx, NO, CO, CO_2, Softener, Soap, Toluene, acids (H_2SO_4, HNO_3, HCl), HMDS, Insecticide, Cigarette smoke
- TRICAN HTD2800P1B11C6 is not light sensitive

ORDERING INFORMATION

Part Number	Description	Supply Voltage	Typical Current Consumption	Max Current Consumption
10142032-01	TRICAN 5V HTD2800P1B11C6	5V	10mA (at 5V)	130mA (at 5V)
HPP816E031	TRICAN 12V HTD2800P1B11C6	12V	15mA (at 12V)	100mA (at 12V)
HPP816E056	TRICAN 24V HTD2800P1B11C6	24V	20mA (at 24V)	104mA (at 24V)

NORTH AMERICA
Tel +1 800 522 6752
customercare.hmpt@te.com

EUROPE
Tel +31 73 624 6999
customercare.tlse@te.com

ASIA
Tel +86 0400 820 6015
customercare.shzn@te.com

te.com/sensorsolutions

Measurement Specialties (MEAS), TE Connectivity, TE Connectivity (logo) and EVERY CONNECTION COUNTS are trademarks. All other logos, products and/or company names referred to herein might be trademarks of their respective owners.

The information given herein, including drawings, illustrations and schematics which are intended for illustration purposes only, is believed to be reliable. However, TE Connectivity makes no warranties as to its accuracy or completeness and disclaims any liability in connection with its use. TE Connectivity's obligations shall only be as set forth in TE Connectivity's Standard Terms and Conditions of Sale for this product and in no case will TE Connectivity be liable for any incidental, indirect or consequential damages arising out of the sale, resale, use or misuse of the product. Users of TE Connectivity products should make their own evaluation to determine the suitability of each such product for the specific application.

© 2019 TE Connectivity Ltd. family of companies All Rights Reserved.